Ceiling Fan

High-end design of the ceiling fan brings wonderful experience, life is better because of it.

OWNER'S MANUAL

Safety Precautions

The information contained in the following pages has been prepared to ensure your maximum enjoyment of your fan
Please remove the fuse or turn off the circuit breaker to cut off the power before installing the fan. Ensure all electrical connections are in compliance with local laws, regulations and national eletrical codes. If you are not familiar with electrical installation and wiring, please hire a qualified electrician or consult the wiring manual.

1. For your safety, all electrical connections and disconnections should be performed by a qualified electrician.
2. Any action performed for the electrical connection of the device must be carried out after ensuring that the general power supply is disconnected,by removing the corresponding fuse or disarming the protective switch in order to ensure total isolation of the power supply.
3. When deciding where to mount the fan, be sure that there is at least 30 inches(76 cm) of space between the fan and any wall or other obstruction that the fan blades could collide with. The greater this distance, the more effective the air flow produced.After the fan is mounted, be sure that the blades are no less than 7ft(2.1 m) above the ground.
4 . The anchor point for the fan must be able to support a weight of at least 100 pounds(45 kg). If mounting on a ceiling junctionbox, be sure that the fan is adequately supported to prevent loosening or turning.
5. The fans electrical connection must be rounded (the fan s ground cable connected to the installations grounding network) in order to avoid any branching that may be dangerous to people.
6. Do not connect the fan's power supply to any dimmers,potentiometers, or light switches, as it will cause the fan's tomalfunction and/or will damage the motor. The fan's must be directly connected to a properly protected installation circuit(magnetothermal differential switch with the adequate size for the fan's consumption and technical specifications).Only use the fan's control to turn it on or stop it.
7. It is recommended to not use these types of fans along with gas installations simultaneously in the same room.
8. The fan must be not be moving and must have come to a complete stop before changing its direction of rotation.This will prevent damage to its motor and to the control unit, when applicable.
9. Do not insert anything that could hit the fan?s blades into its pathway while it is moving, as this could cause damage to people, can damage the blades, and can offset the balance of the unit, causing vibrations and wobbling.
10. After installing the fan, ensure that all fastenings aresecure and tightened in order to avoid any noise caused by loose elements.
11. Due to the fan?s movement, certain fastenings may become loose. Check all fastenings twice per year at a minimum in order to ensure that they are sufficiently tight. If necessary, they must be retightened.
12. The motor housing can be cleaned with a soft brush or a lint-free cloth to avoid scratching the surface. Clean the blades with a lint-free cloth. Important: Turn off the main power supply before starting any maintenance. Do not clean the fans with water or a damp cloth.

Note: The important warnings and instructions indicated in this manual are not guaranteed to cover all possible conditions and situations that may occur. It must be understood that common sense, precaution, and care are factors that cannot be included in all products. These factors can and must only be provided by the user who maintains and enjoys this fan.

BEFORE YOU START

Contact a licensed electrician if you are not good at performing electrical work. It's the licensed electrician who installs th

Contact a licensed electrician if you are not good at performing electrical work . It's the licensed electrician who installs the fan . if required by the local code . Do not use the fan with a dimmer switch Turn off power at breaker

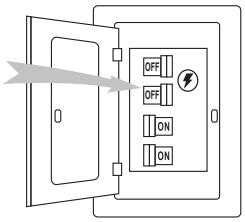

Tools and Materials Required

External Hexagonal Wrench

Wire Stripper

Phillips Screwdrive

Step Ladder

Product Instruction

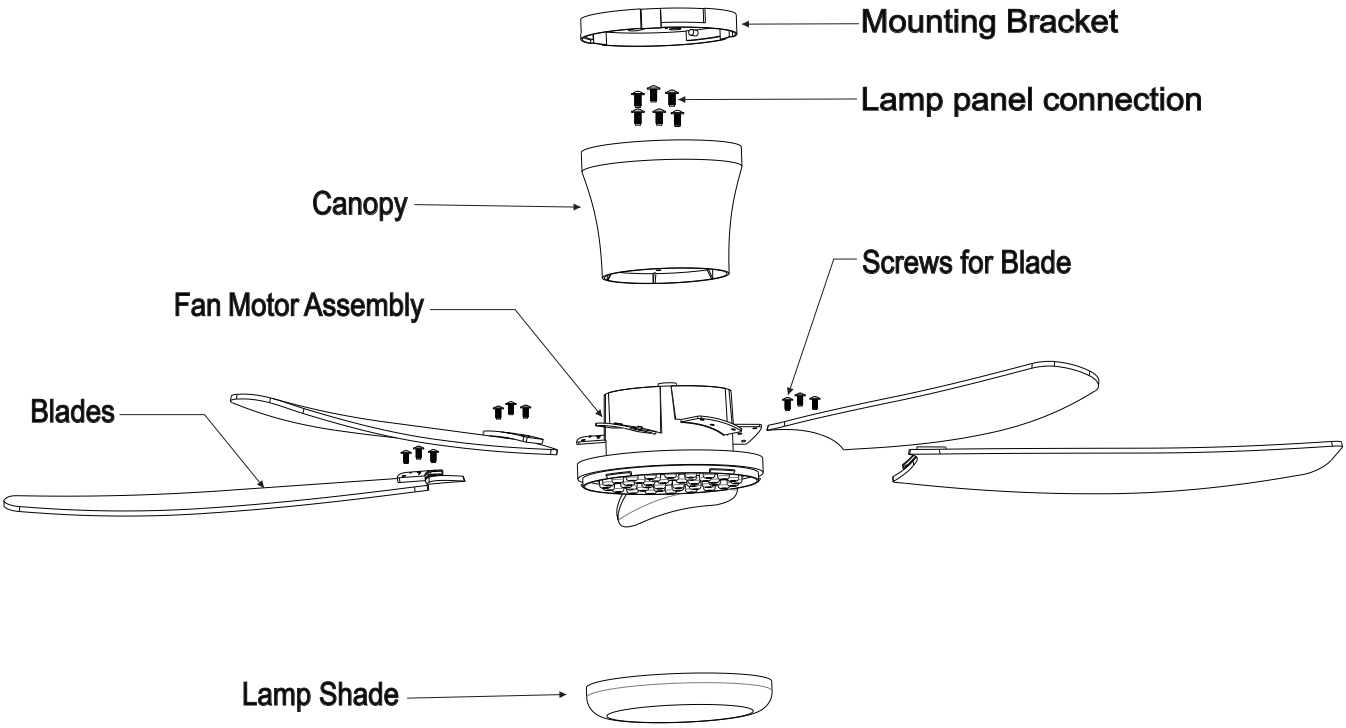

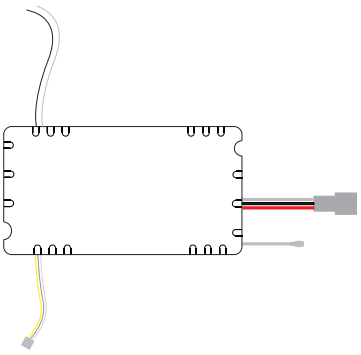
Receiver

Remote Control

SCREWS BAG

Item no.	Reference Image	Qty.
1	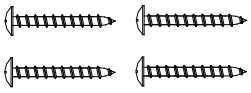 ST5x35 Setscrew	×4
2	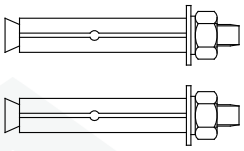 Expansion Screw	×2
3	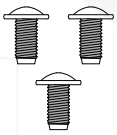 Screws for Blades	×15

Tools Required : Phillips screwdriver , a pair of pliers , straight slot screwdriver , adjustable wrench , step ladder ,and wire cutters

INSTALLING THE MOUNTING BRACKET

The ceiling fan must be installed in the location where there is 12"(300mm) spacing from the tips of all blades to the nearest objects or walls. REMEMBER to turn o ffthe power before hanging the fan. Follow the instruction below to hang your fan properly:

1. For concrete ceiling, drill two holes in the ceiling and secure the mounting bracket to the ceiling with two Φ0.32"(8mm) (distance between the two holes should be appropriate) expansion screws, flat washers nuts provided and tighten with a spanner.

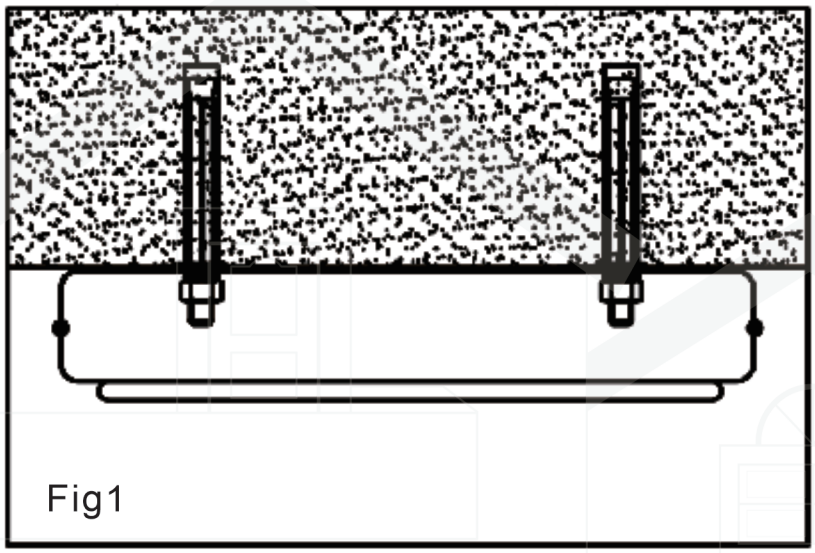

Fig1

2. For wood ceiling, secure the mounting bracket to the ceiling that is capable of carrying a load of at least 100lbs (45kgs) with two long mounting screws and washers provided. Be sure at least 0.12"(30mm) of the screw is threaded into the support.

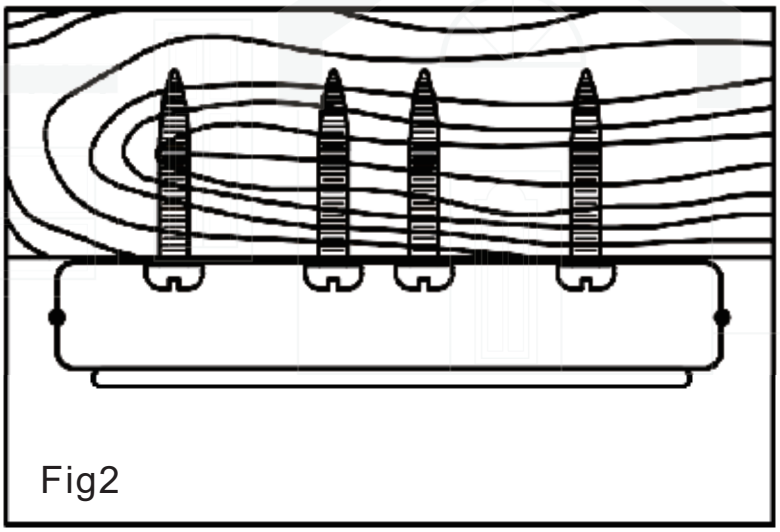

Fig2

MAKE THE ELECTRIC CONNECTIONS

WARNING To avoid possible electrical shock , be sure the electricity is turned off in the main fuse box before wiring

1 . Connect the black wire on the motor to the live wire in the room, the white wire on the motor to the natural wire in the room, and connet the yellow ground wire on the ceiling mounting plate to the ground wire in the room
2. Connect the same color wire on the receiver and fan body together
3. After wiring is completed , fix the fan lamp body onto the hanging board with screws

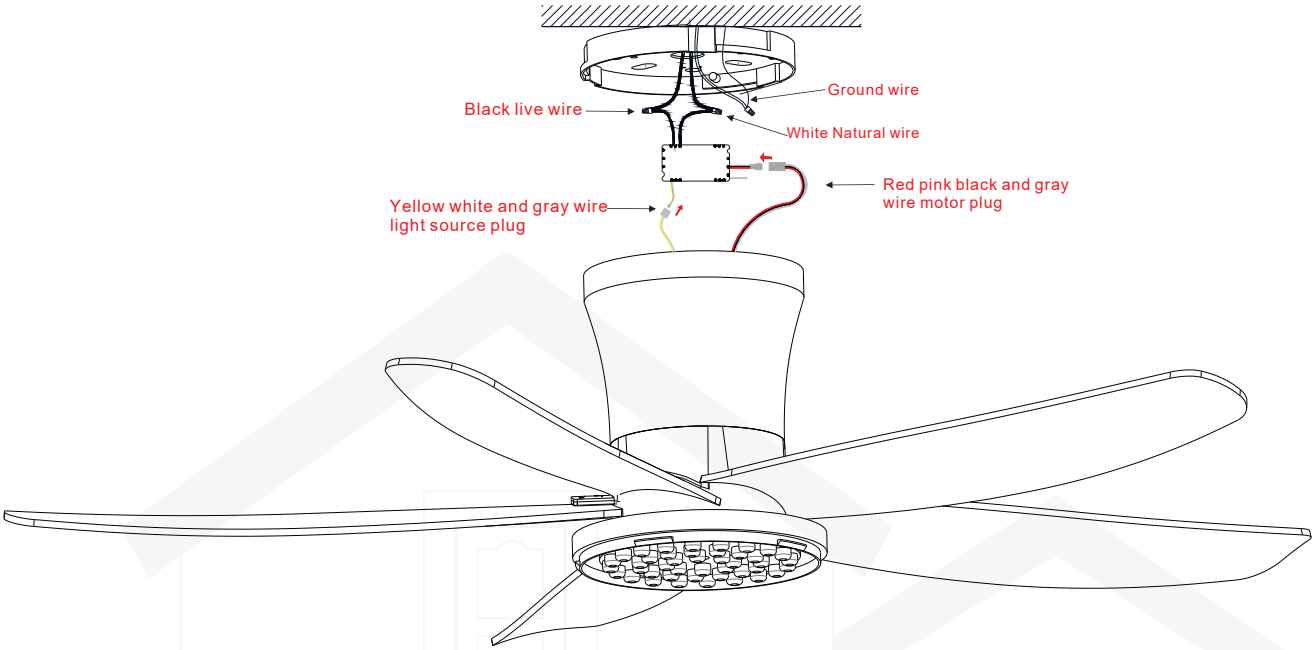

Figure 3

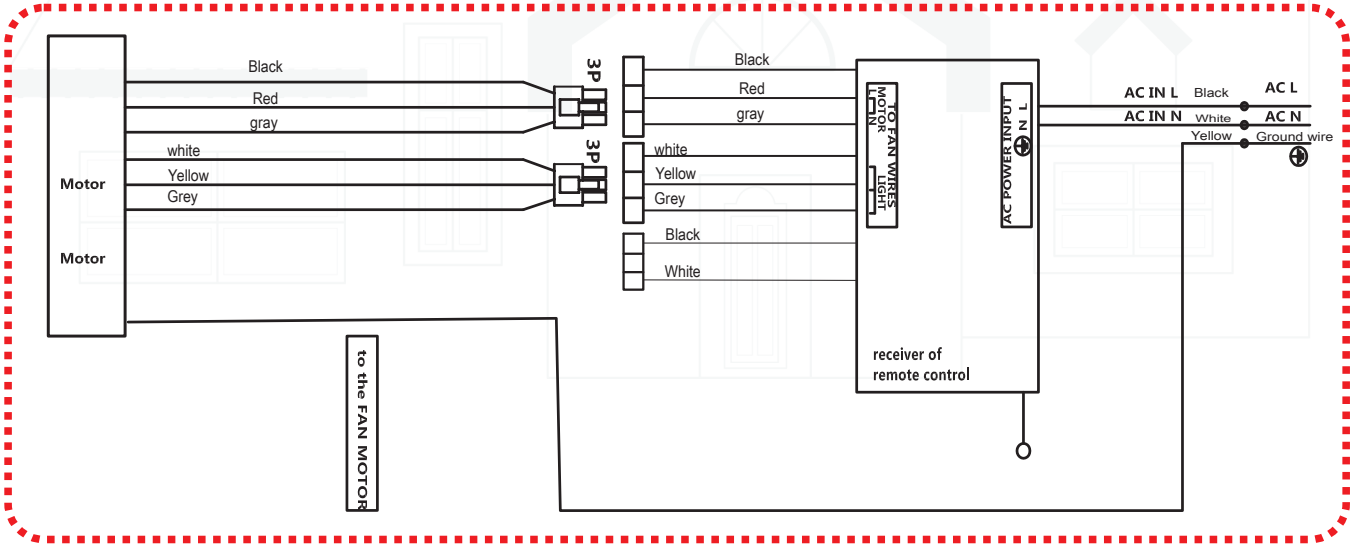

INSTALLING THE LIGHT KIT

4:Align the fan lamp body with the card slot and insert it into the inside, then rotate the lamp body and fix it with the hanging board card slot

Figure 4

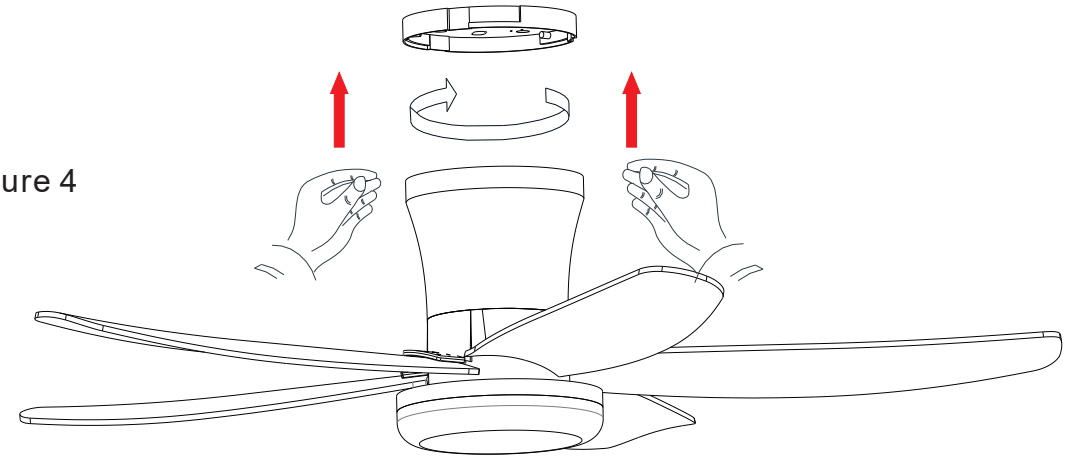

5.Install the lampshade and turn the acrylic lampshade upwards and clockwise

WARNING Take care not to over tighten when installing the glass shade

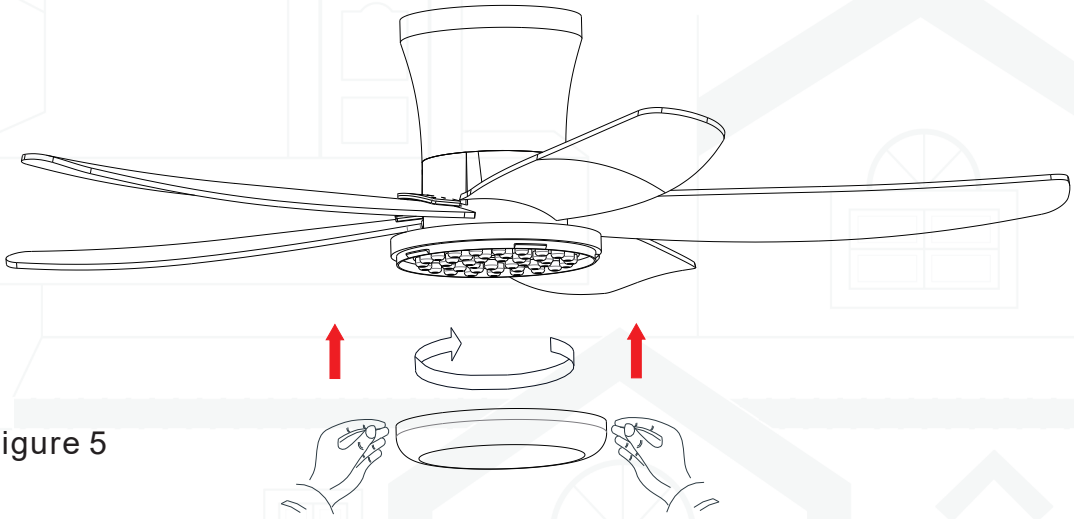

Figure 5

Installation is now finished . Turn on the power switch. Then the fan lights are on Test and pair your fan immediately using the remote control

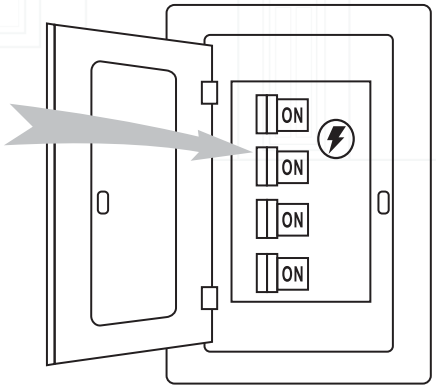

1. Restore electrical to the outlet box by turning the electricity on at the main fuse box.

2. Remove the battery cover from the remote control transmitter, install the battery, and replace the cover.
Note:
   1). Use AAA 2 1.5V battery to replace battery.
   2). If not using for long periods of time, remove the battery to prevent damage to the remote transmitter, and store the remote transmitter away from excess heat or humidity.

3. The buttons on the remote control transmitter control the fan speed and light as follows.

Remote Control（Esmitter）Operation

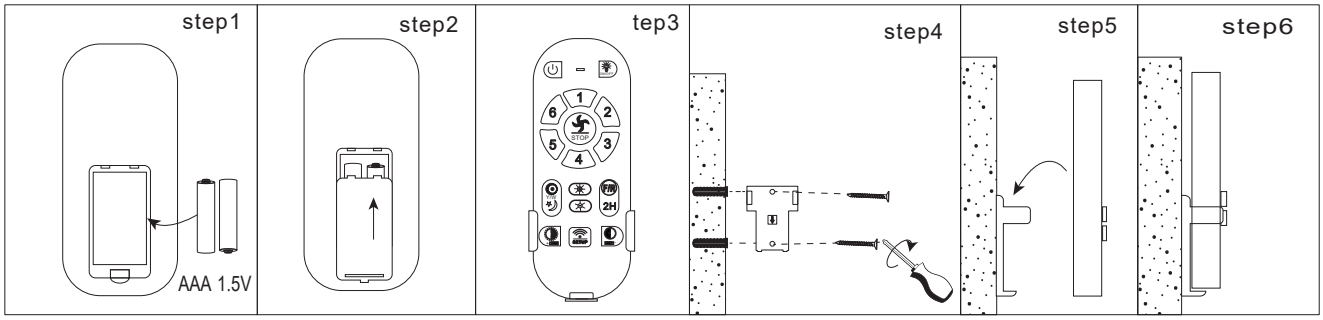

Instructions of Smart Fan Light

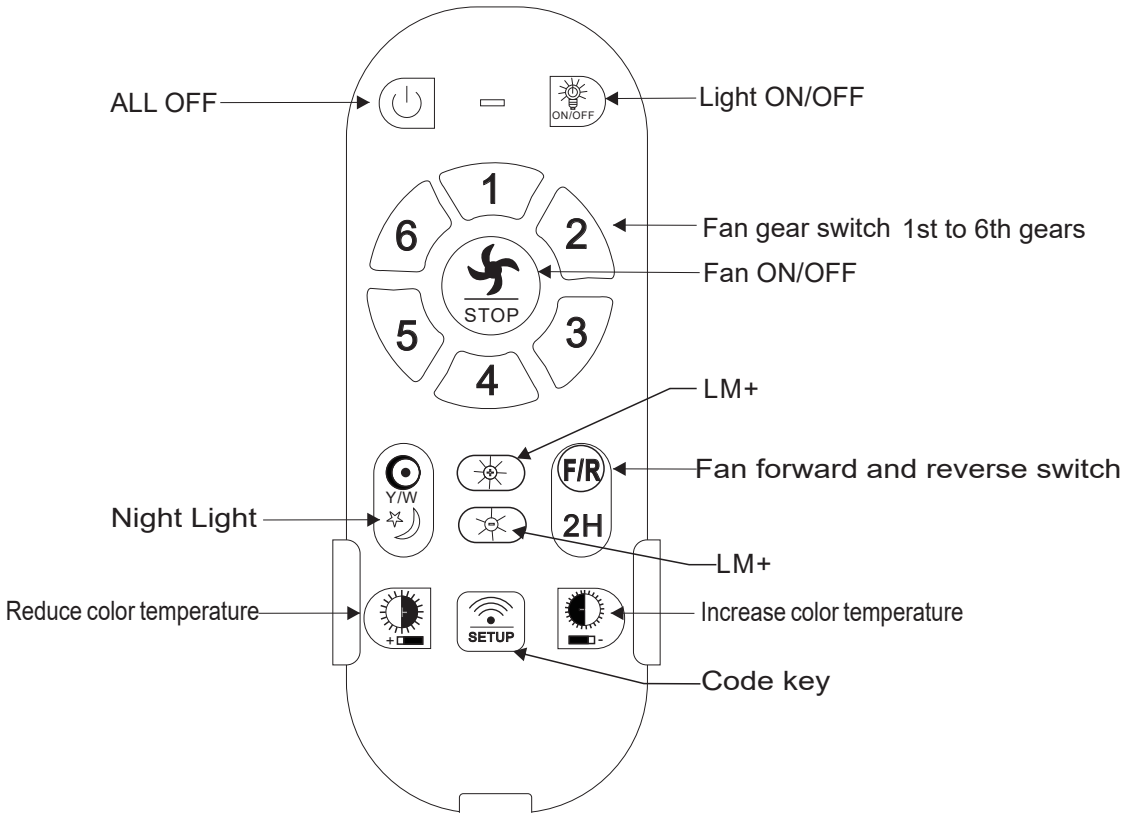

IMPORTANT:PAIRING BETWEEN REMOTE AND RECEIVER

Within the 30s after turning "ON" the power supply, press the "FAN ON/OFF" buttons of transmitters for 5s. Then the pairing is successfully activated and all functions will work normally

IMPORTANT NOTES

The first step of pairing must be performed within 30s after turning on the power supply.

1.(a)When pairing multiple fans, please ensure the isolation switch or the power supply to the first installed fan is turned o ffprior to pairing further fans. Please pair one fan at a time. (b)Please ensure the isolation switch is kept "ON". The isolation switch can not act as a light switch as this will impair the remote receiver.

2.When the transmitter's functions are disabled, please check the battery orientation and power level. Low battery voltage will affect your transmitter's functions and your fan's operation.Other remote controls nearby using the same frequency may interfere with your fan's receiver.Screw

3.Please remove batteries from the transmitter if not used for a long period of time.

4.Remote supports 200w maximum lighting.

IMPORTANT REMINDERS

1.Note: Receiver must be correctly installed on the fan's mounting bracket.

2.When the transmitter cannot control the receiver, please check the battery level.

3.When the transmitter cannot control the receiver, please check if similar remote controls your fan nearby and interferes with each other.

4.Battery's low power will affect the transmitter's sensitivity and the signal reception accordingly. You must replace the battery if its power is low.

5.Please take the battery out of the transmitter to avoid battery leaks when not used for a long time.

6.Isolation switch must be connected in the line.

7.When a blackout or otherwise circumstances happen, the light will work normally after the power restores.

Please make sure that the fan is powered off before cleaning or maintaining. LED lights are not removable or replaceable, they can only be used with the product.

WARNING: TO REDUCE THE RISK OF PERSONAL INJURY, DO NOT BEND THE BLADE ARM WHILE INSTALLING, BALANCING THE BLADES, OR CLEANING THE FAN. DO NOT INSERT OBJECTS BETWEEN ROTATING FAN BLADES.

NOISE: This is normal to hear occasional small noises, when it is quiet (especially at night). Because slight power fluctuations and frequency signals superimposed in the electricity for off-peak hot water control may change fan motor noise. Please allow a 24-hour "breaking-in" period, most noises of a

Maintenance and Cleaning

1,Check the support connections , brackets , and airfoil attachments twice a year to ensure they are secure, because some connections may loose over time. It is not necessary to remove the fan from the ceiling.

2.Clean your fan periodically. Use only a soft brush or lint-free cloth to avoid scratching the finish. The plating is sealed with a lacquer to minimize discoloration or tarnishing.

3.(Optional) Apply a light coat of furniture polish to the wood blades.

4.(Optional) Cover small scratches with a light application of shoe polish.

Do Not

1 . Dont use water to clean . Water may damage the motor and the wood , or even possibly cause an electrical shock.

2.Don't apply oil to your fan or motor, as the motor has permanently lubricated sealed ball bearings.

Note : Power off the fan before maintaining or cleaning the fan

HOW TO USE BALANCING KITS

NOTE: CEILING FANS TEND TO MOVE DURING OPERATION DUE TO THE FACT THAT THEY ARE MOUNTED ON A RUBBER CROMMET. IF THE FAN WAS MOUNTED RIGIDLY TO THE CEILING, IT WOULD CAUSE EXCESS VIBRATION, MOVEMENT OF A FEW CENTIMETERS IS QUITE ACCEPTABLE AND DOES NOT SUGGEST ANY PROBLEMS

TO REDUCE FAN WOBBLE: PLEASE CHECK THAT ALL SCREWS WHICH SECURE THE MOUNTING BRACKET AND DOWNROD ARE SECURE

BALANCING A WOBBLING CEILING FAN

For your convenience, a balancing kit is included: please follow this procedure when balancing the fan:

1.Check that all blades and blade arm screws are secure.

2.Most fan wobbling problems result from blade levels are unequal. Check this level by selecting a point on the ceiling above one fan blade's tip. Measure this distance. Rotate the fan until the next blade is positioned for measurement. Repeat for each blade. The distance deviation should be equal within 1/8" (0.32cm).

3.Use the enclosed blade balancing kit if the blade wobbling is still noticeable.

4.If the blade wobble is still noticeable, interchanging two adjacent (side by side) blades can redistribute the weight and possibly result in smooth operation.

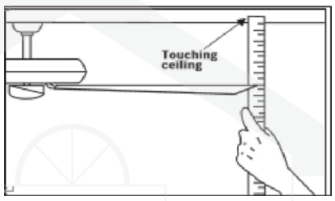

WARNING: TO REDUCE THE RISK OF PERSONAL INJURY, DO NOT BEND THE BLADE ARM WHILE INSTALLING, BALANCING THE BLADES, OR CLEANING THE FAN. DO NOT INSERT OBJECTS BETWEEN ROTATING FAN BLADES

NOISE

It's normal to hear small occasional noises when in quiet night or days. Please allow a 24-hour "breaking-in" period, most noises of a new fan disappear during the time.

TROUBLESHOOTING

Your fan may occasionally jerk forward or backward upon starting up.
This is normal and does not affect the fan operation.
Try these troubleshooting steps before contacting customer service.

SYMPTOM	POSSIBLE SOLUTIONS
The fan doesn't spin	1. Make sure the fan is getting power. 2. Check the functionality of circuit breaker or fuse panel and wall switch. 3. Confirm fan wires are correctly connected to the house wires. 4. Make sure the blocker of the fan motor is removed. 5. Use your remote to check the power to the breaker and try to work your ceiling fan manually from afar (Normal switch only for the fan power on/off)
The fan's light does not work	Make sure the LED light kit and light bulb are connected well.
The fan is noisy and wobbling	1.Confirm the blade screws are NOT rubbing against the the motor's round plastic part. 2.Confirm the pin wire are NOT connected against the moving part. 3. Confirm the coupling cover is NOT hitting the motor 4. Confirm the down rod is NOT slanted 5. Tighten any loose screws on the light kit, fan blades, motor coupling, down rod, brackets and mounting hardware. 6. Confirm the hanger ball is firmly seated in the mounting bracket. 7. The ceiling beam must meet the minimum tensile test strength of 30KG for installation. 8. Make sure the airfoils and brackets are NOT bent or deformed. 9. Confirm the wire connections are not rattling against each other. 10. Confirm the fan blades are not cracked. If the fan blades are cracked, replace the damaged blades with the set of new blades of same brand as your ceiling fan ensures the compatibility. 11. Change fan blades' positions. 12. Confirm the light kit is NOT slanting and hitting the motor. 13. Confirm all the blades are screwed firmly into blade holders.
The fan or light automatically turns on/off	1.Confirm the circuit breaker is not malfunctioning. 2.Confirm the wire connections are not frayed. 3. Confirm the app does not set the timer or schedule 4. Power o ffthe fan for 10 minutes, then power on again.