Vinnova Inc

INSTALLATION SPECIFICATION

Model No.:	804530-MCB-LED
Finish:	Black
Mount type:	Wall-mounted
Orientation:	Horizontal
Material:	Aluminum
Storage included:	Yes
Overall size:	30.0"W x 5.5"D x 29.5"H
Net weight:	38.6 lbs
Lens Thickness:	3mm

All maesurements are approximate.Maesurements may vary +/-½

Cervia

30"
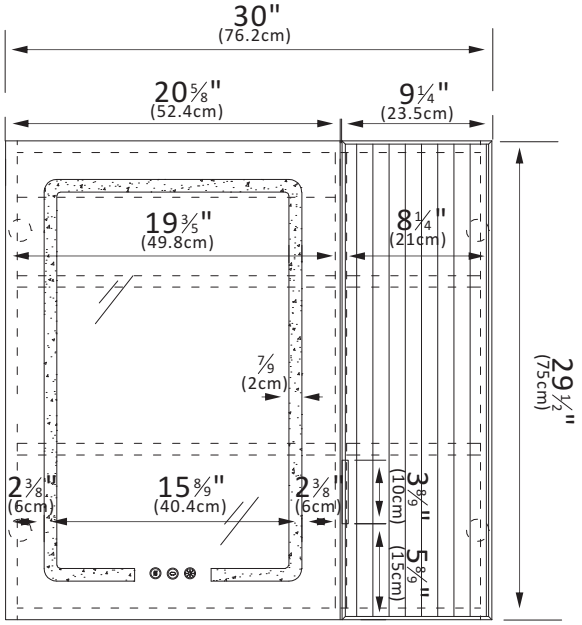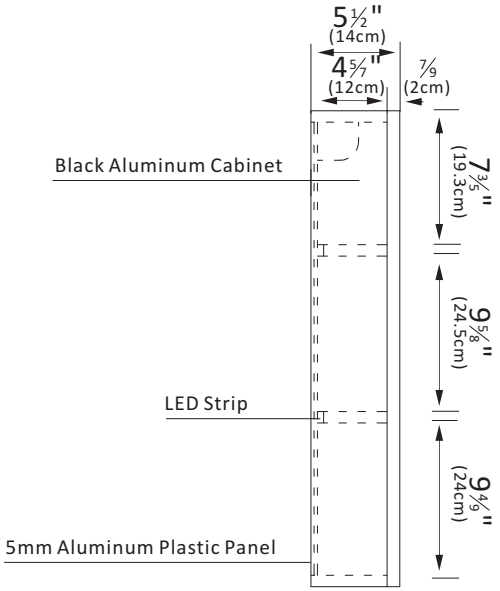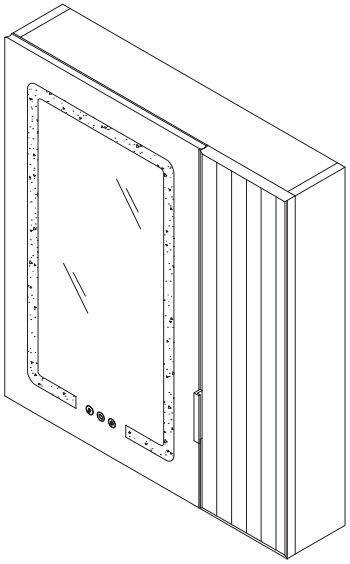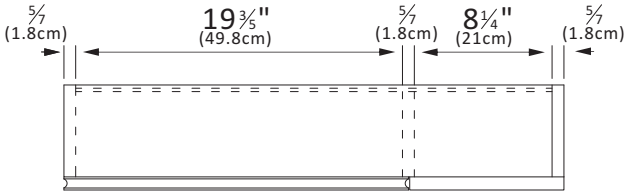
Bathroom Mirror