# *Round Dining Table*

Examine all packaging material for small parts that may have come loose during shipment. Periodic checks are recommended to insure that all components are in proper position, tight and free from damage. Keep this assembly instruction for future reference. Adult assembly is required. This product is designed for residential use only.

| CODE | QTY | HARDWARE |
|---|---|---|
| 1 | 1 | M4 x 63mm Allen Wrench |
| 2 | 8 | M6 x 60mm JCBC Bolts |
| 3 | 8 | 1/4" Spring Washers |
| 4 | 8 | 5/16" Flat Washers |

| CODE | QTY | COMPONENTS | CODE | QTY | COMPONENTS |
|---|---|---|---|---|---|
| A | 1 | Top | B | 4 | Legs |

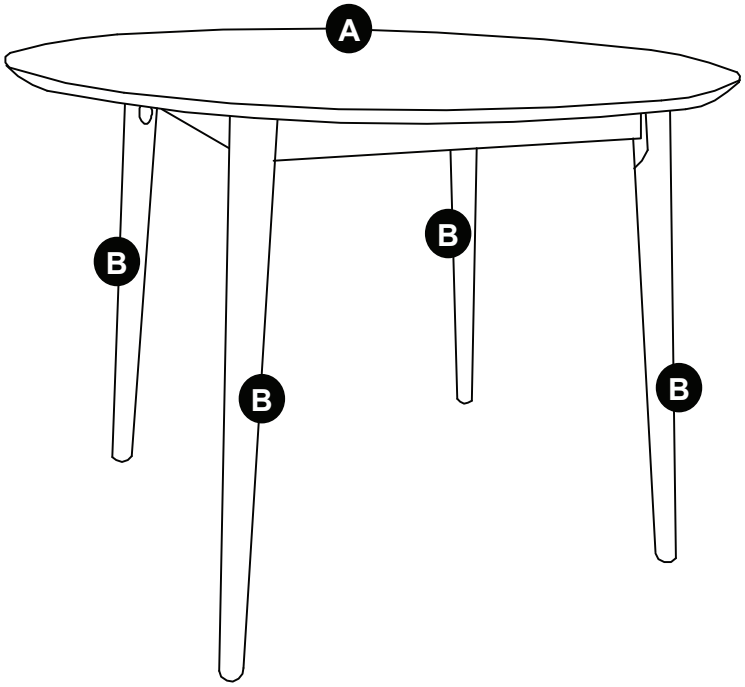


***STEP 1 - Figure 1***

Turn Top (A) upside down on a clean smooth surface to prevent scratching. Attach Legs (B) to Top (A) using 2 JCBC Bolts (2), 2 Spring Washers (3) and 2 Flat Washers (4) per leg. Return table to its upright position. The assembly is now complete.

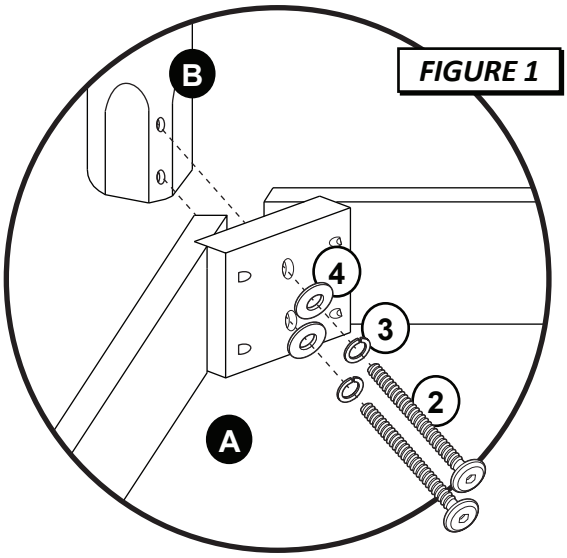


## ⚠ WARNING

- Do not let any sharp objects touch or rub the surface of the product.
- When assembling, do not let children play around the working area.
- Please confirm all parts are correct before starting the assembly process.
- Do not tighten all bolts and screws completely until the entire unit has been assembled and set up.
- Be careful if using power tools as they can over tighten screws and strip threads.

**CARE & MAINTENANCE:** The touch of a soft cloth is all the maintenance the finish will ever need. Please do not use harsh or abrasive cleaners for polishing, as they may cause damage to the finish. Periodic checks are recommended to make sure that all hardware is securely tightened.