Shoreline Surfboard Coffee Table

Assembly Guide

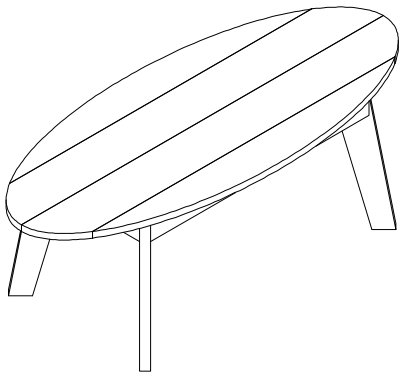

BV-SBCT1

*Actual Style May Vary from the One Pictured in this Guide

HARDWARE INCLUDED

A 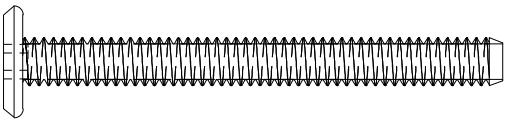 Qty: 8

(1/4-20 x 2.00")

TOOLS INCLUDED



5/32" HEX KEY

CUSTOMER SUPPLIED TOOLS

Cordless screwdriver/drill OR
multi-bit handle for the square bit

IMPORTANT!

DO NOT fully tighten bolts until all bolts are started.

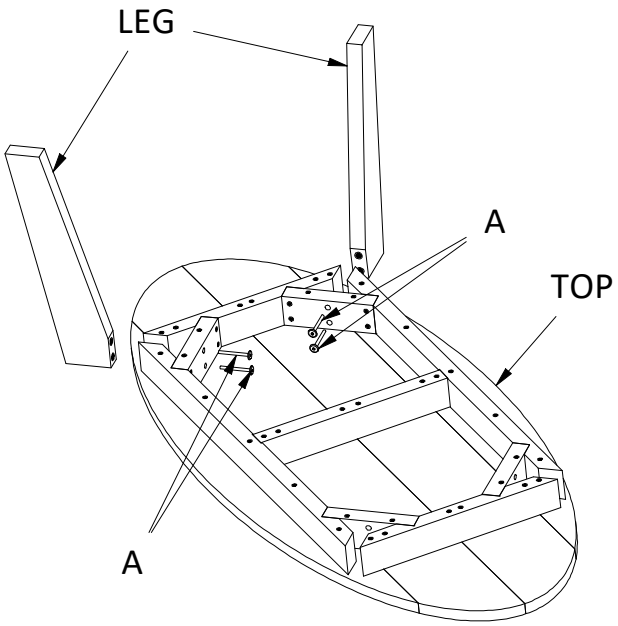

STEP #1

Flip the Top over attach the Legs with (2) A bolts each as shown.

STEP #2

Repeat Step 1 on the other side.

For information on Care and Cleaning or to Register your product, please visit www.bahiaverdeoutdoors.com.