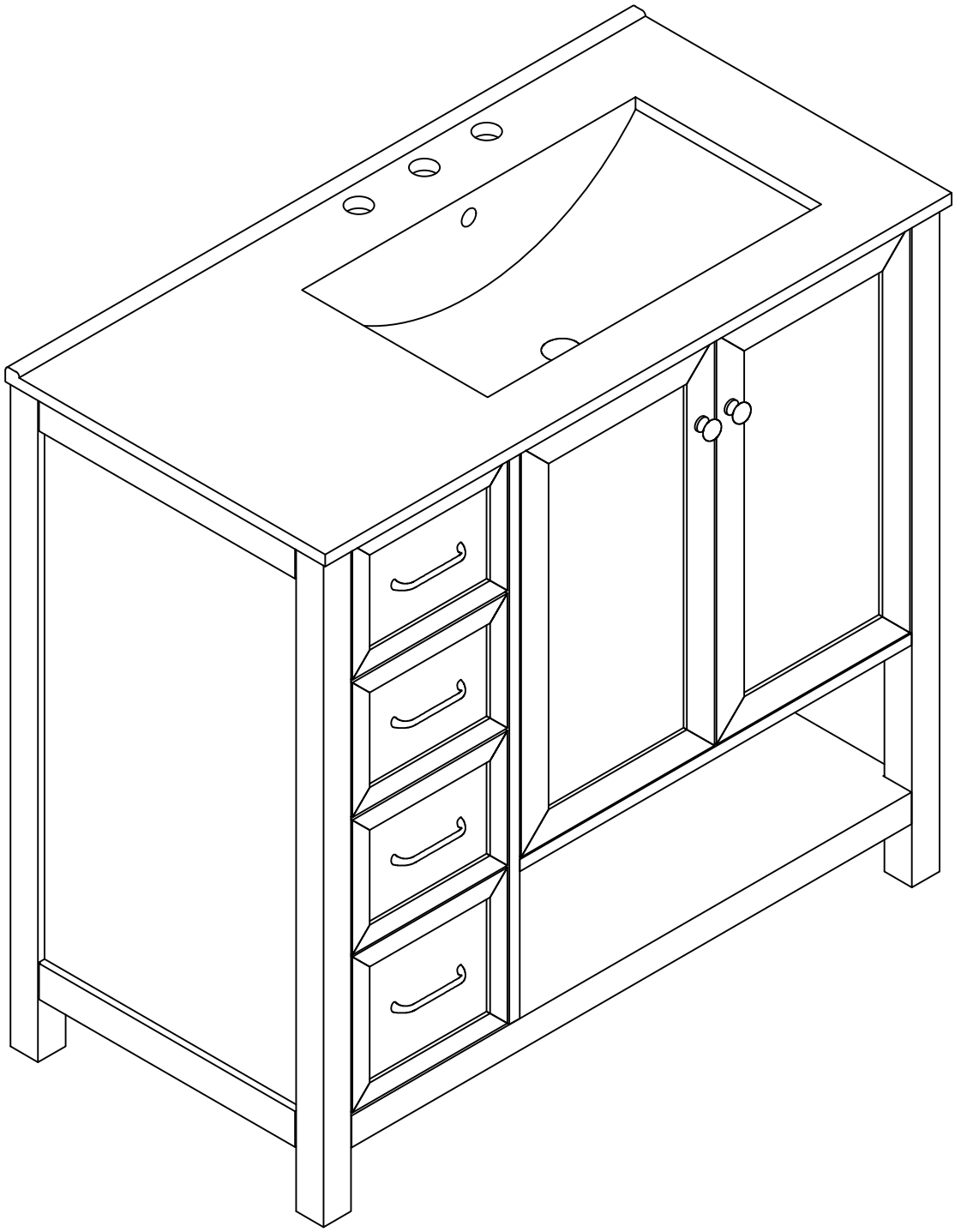

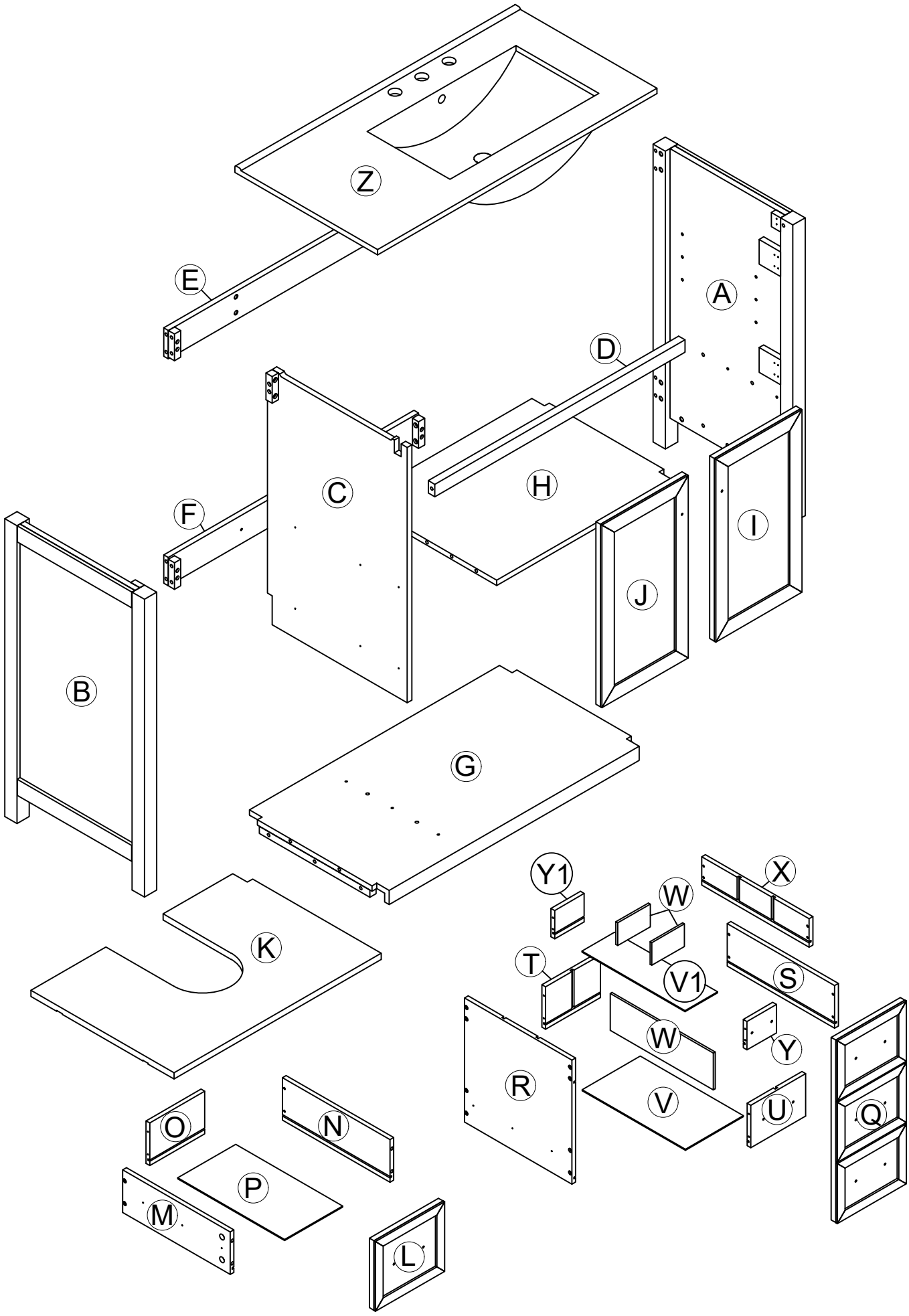
Z
E
A
D
C
H
F
I
J
B
G
Y1
X
W
T
V1
S
K
W
Y
R
V
U
Q
O
N
P
M
L

PRODUCT PARTS:

A	B	C	D	E	F
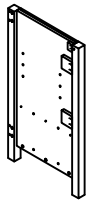	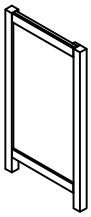	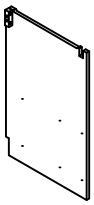	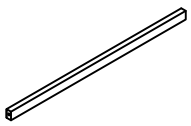	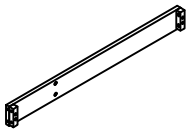	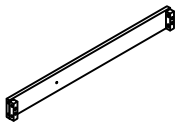
1PC	1PC	1PC	1PC	1PC	1PC
G	H	I	J	K	L
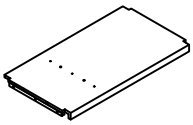	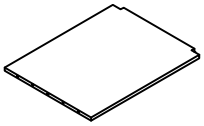	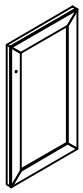	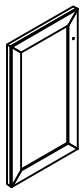	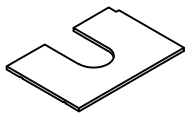	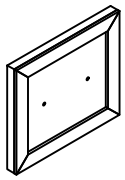
1PC	1PC	1PC	1PC	1PC	1PC
M	N	O	P	Q	R
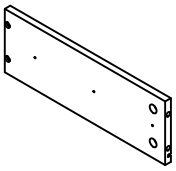	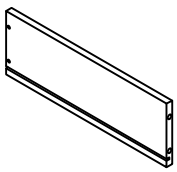	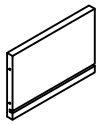	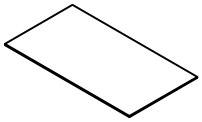	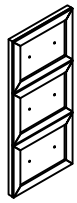	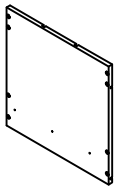
1PC	1PC	1PC	1PC	1PC	1PC
S	T	U	V	V1	W
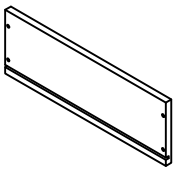	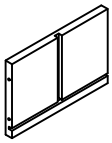	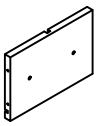	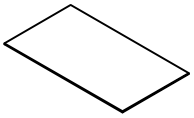	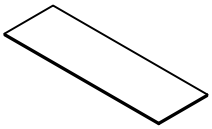	
1PC	1PC	1PC	1PC	1PC	2PCS
X	Y	Y1	Z		
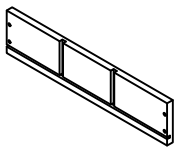			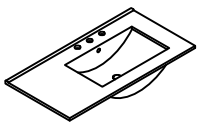		
1PC	1PC	1PC	1PC		

HARDWARE:

①	②	③	④	⑤	⑥
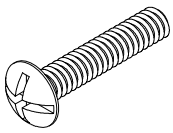 1/4"x25mm	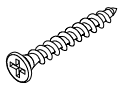 Ø4x20mm	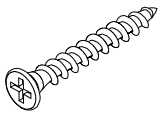 Ø4x25mm	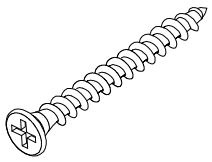 Ø4x35mm	 Ø3x12mm	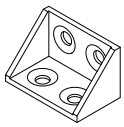 33x20x20mm
16+1 PCS	4 PCS	20+2 PCS	4 PCS	8 PCS	2 PCS
⑦	⑧	⑨	⑩	⑪	⑫
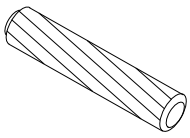 Ø8x30mm	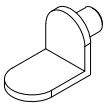	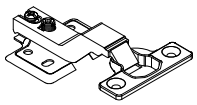	 Ø4x12mm	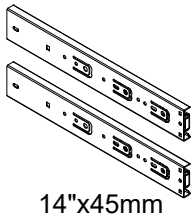 14"x45mm	 Ø3x10mm
20+2 PCS	4 PCS	4 PCS	24+2 PCS	2 SET	24+2 PCS
⑬	⑭	⑮	⑯	⑰	
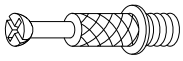 Ø6x33mm	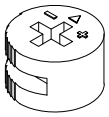 Ø15x9mm			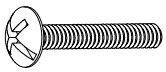 5/32"x15mm	
10+1 PCS	10+1 PCS	4 PCS	2 PCS	10 PCS	

STEP 1

5	Ø4x12mm	4pcs	6		2pcs
7	Ø8x30mm	2pcs			

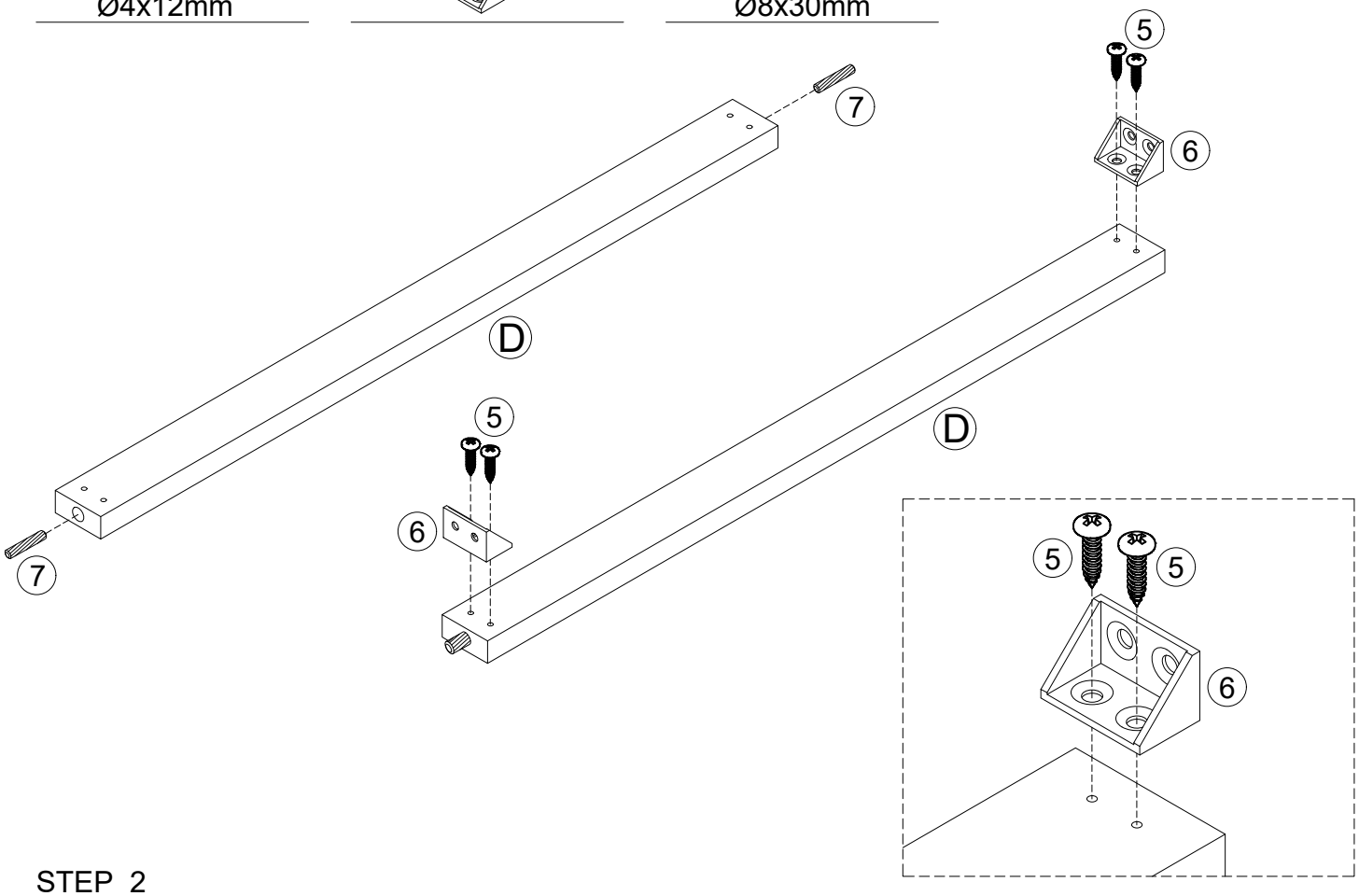

STEP 2

7	Ø8x30mm	8pcs

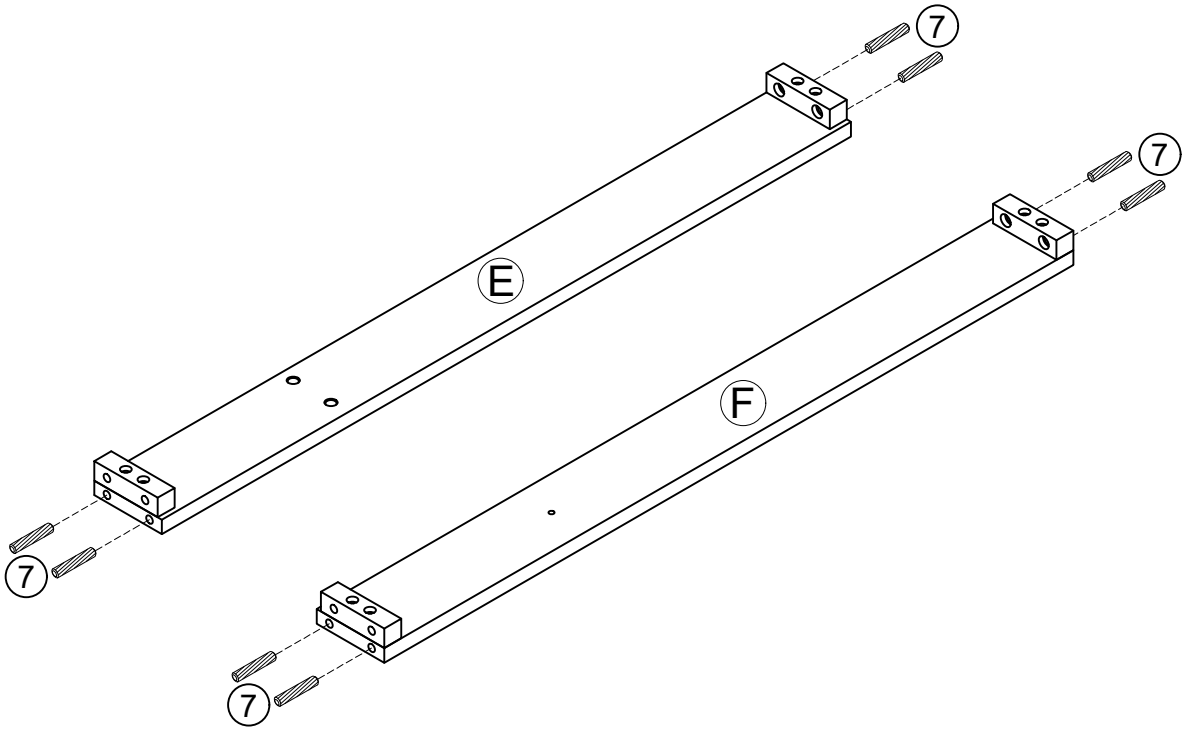

STEP 3

⑦  4pcs
Ø8x30mm

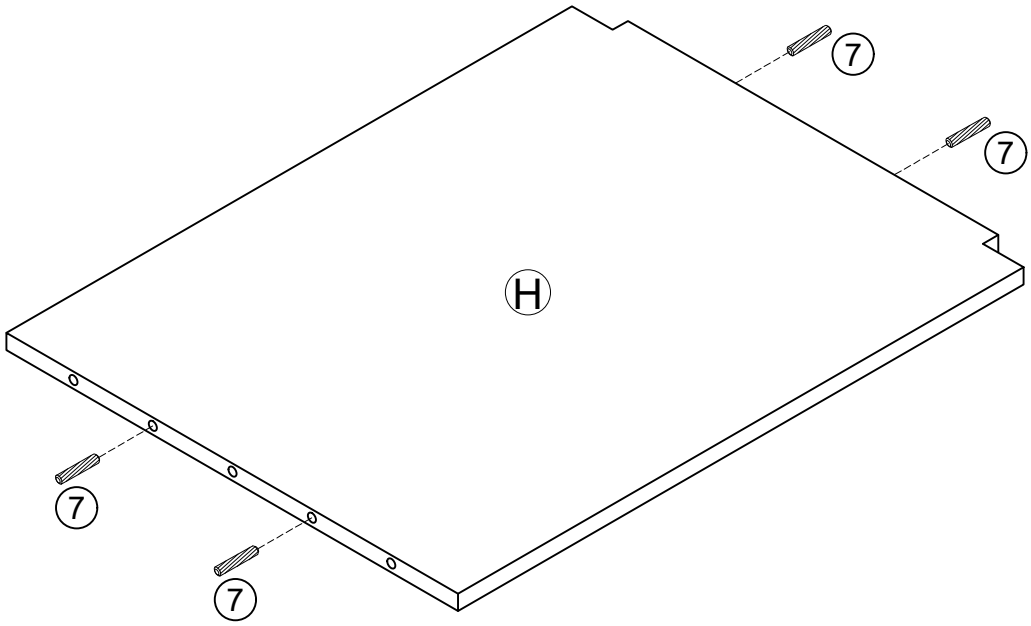

STEP 4

⑦ 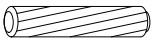 4pcs
Ø8x30mm

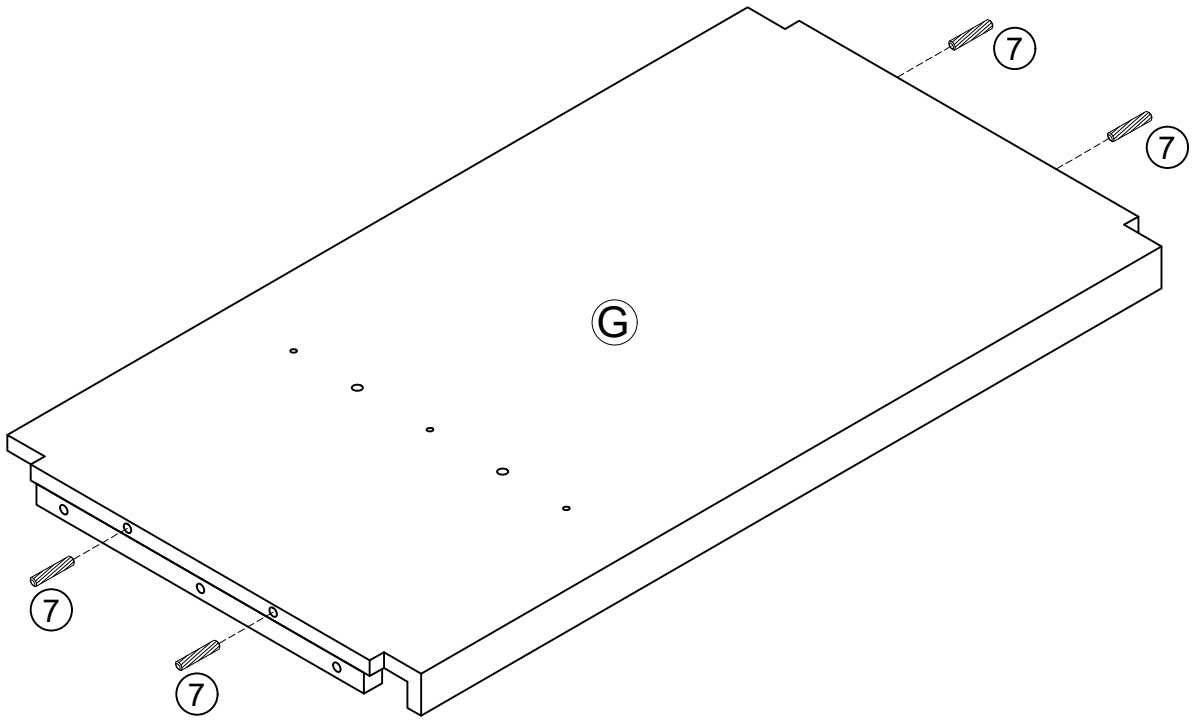

STEP 5

⑦ Ø8x30mm 2pcs

⑬ Ø6x33mm 3pcs

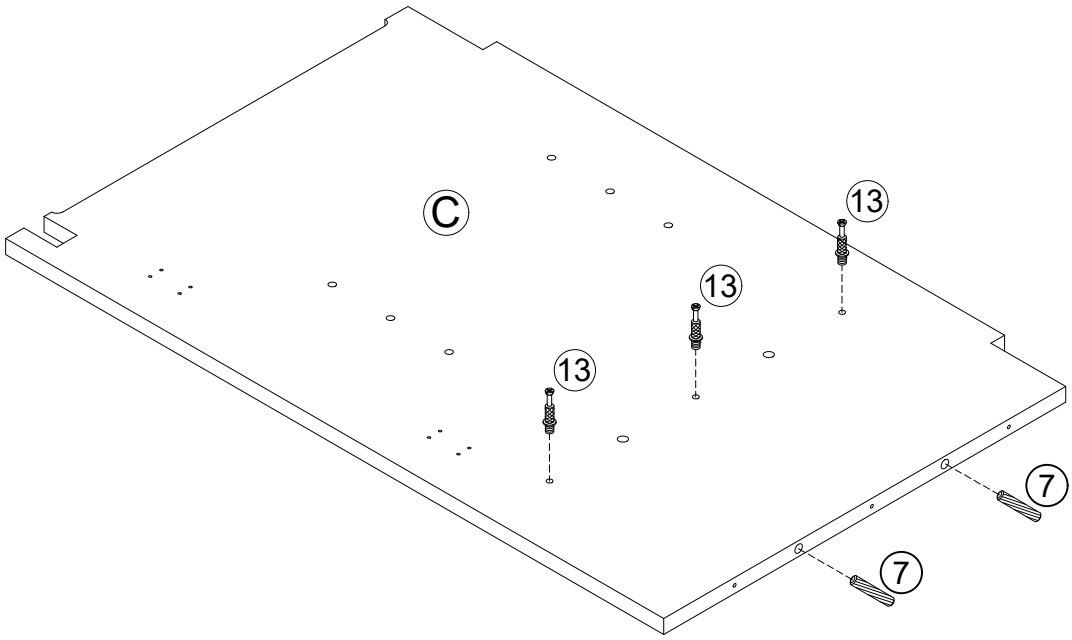

STEP 6

⑬ Ø6x33mm 3pcs

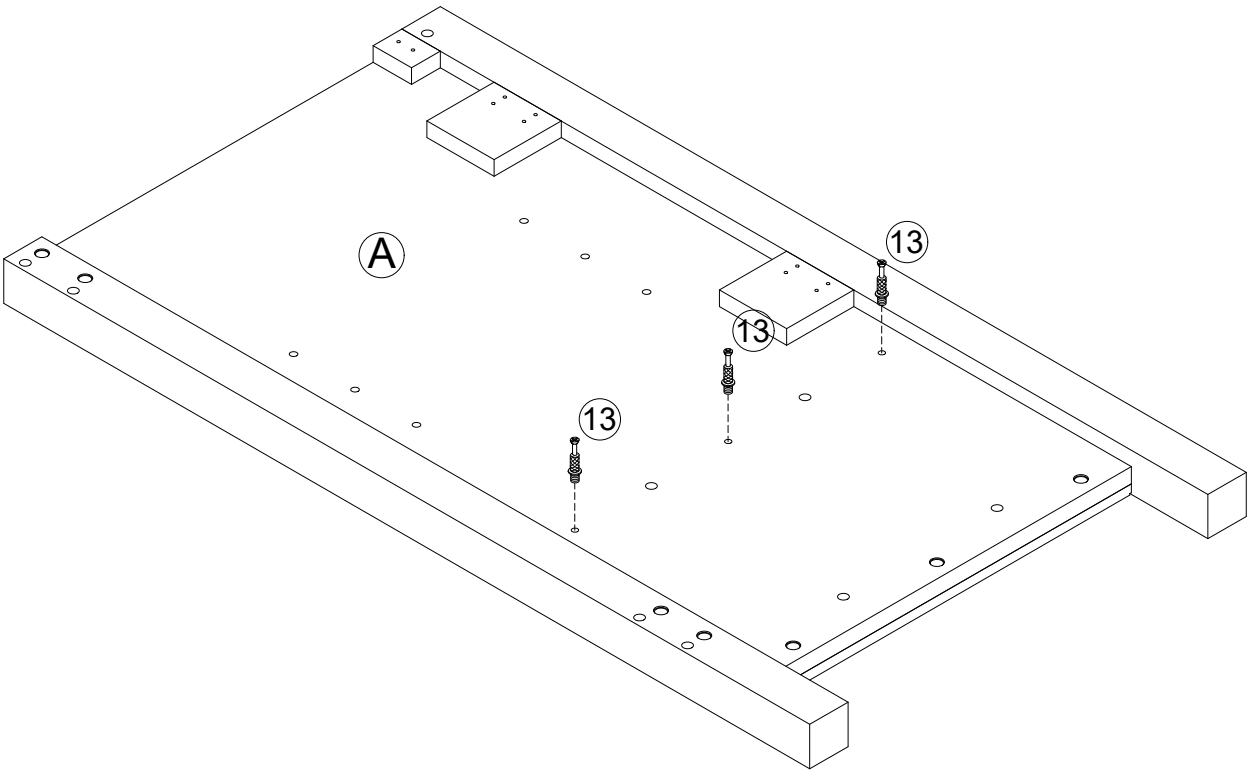

STEP 7

(11) 4SET
14"x45mm

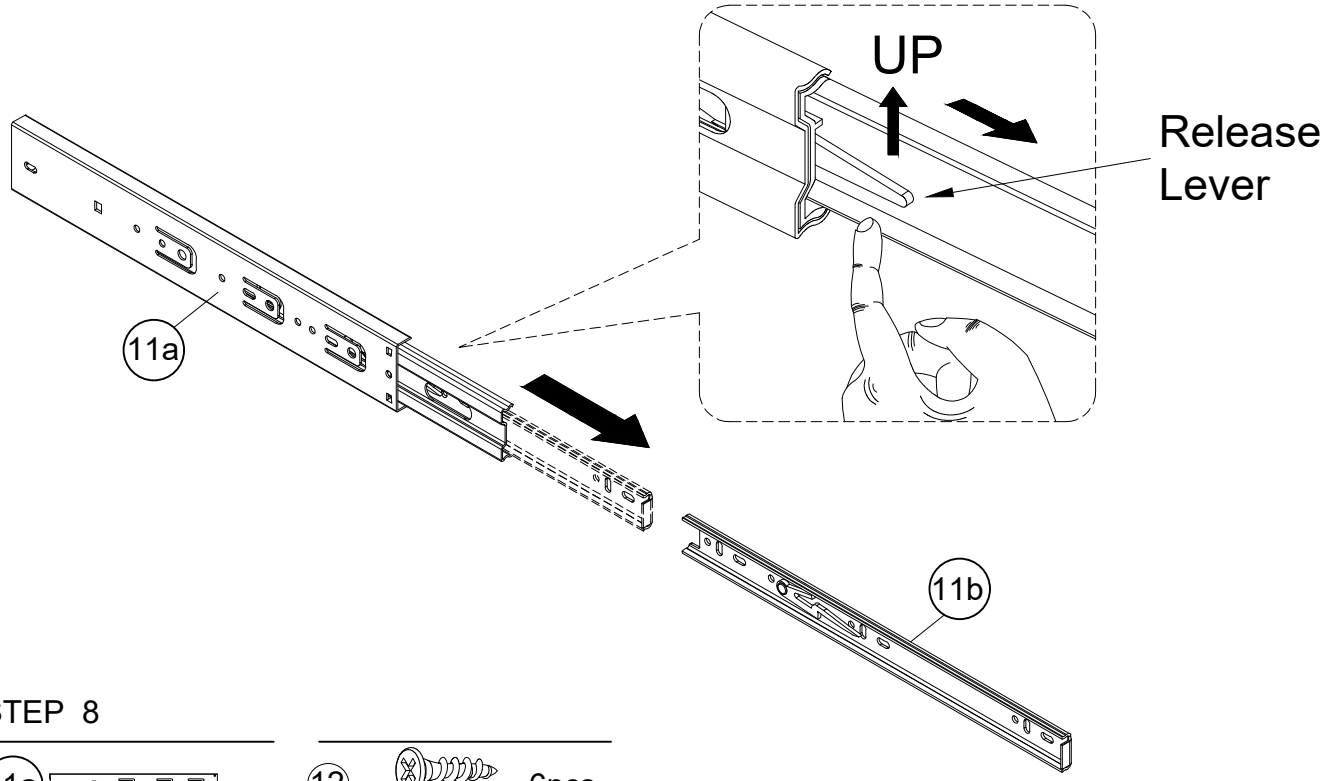

STEP 8

(11a) 14"x45mm

(12) 6pcs
Ø3x10mm

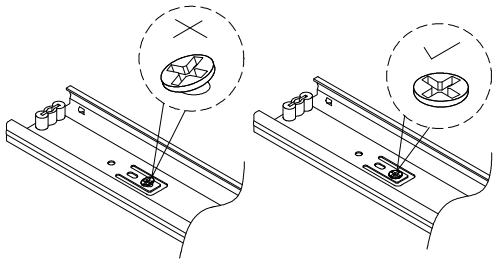

Please make sure that the screw is VERTICAL so as not to affect the sliding of the drawer.

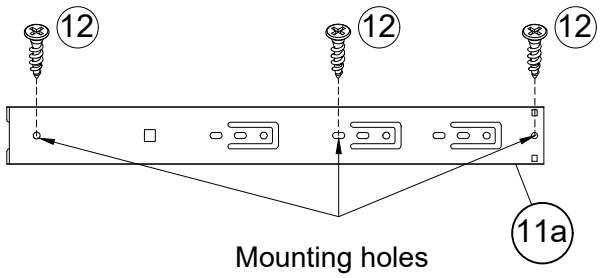

Mounting holes

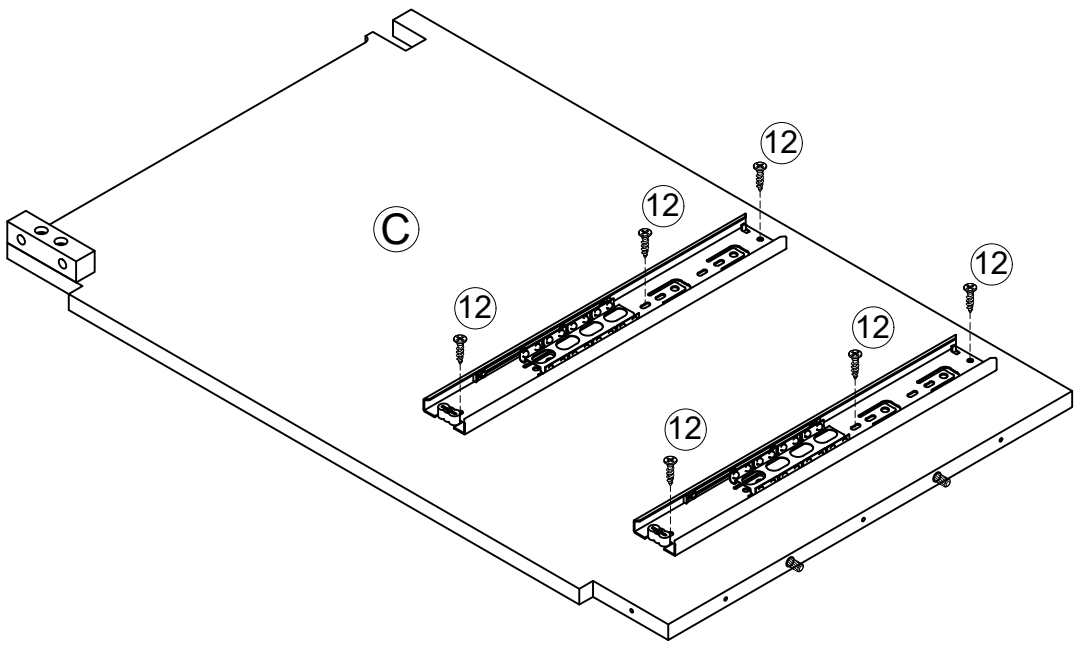

STEP 9

11a 14"x45mm

12 Ø3x10mm 6pcs

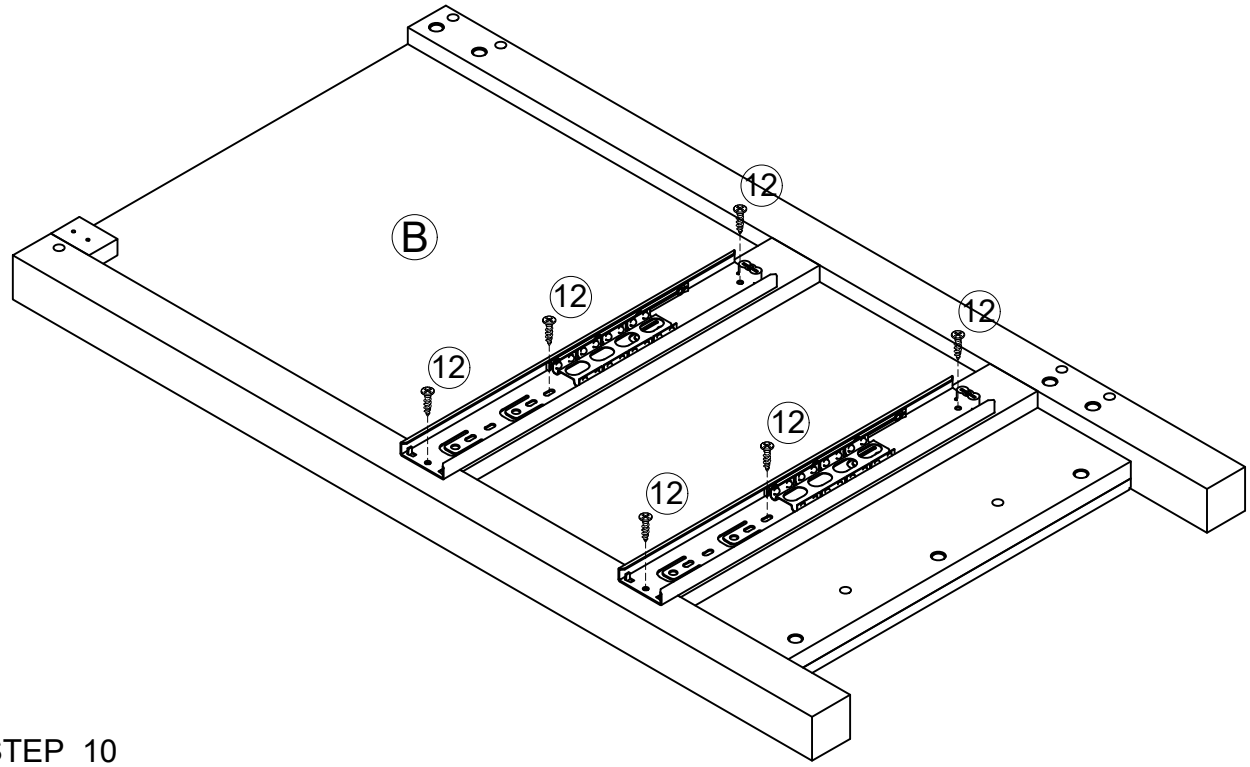

STEP 10

4 Ø4x35mm 4pcs

1 1/4"x25mm 2pcs

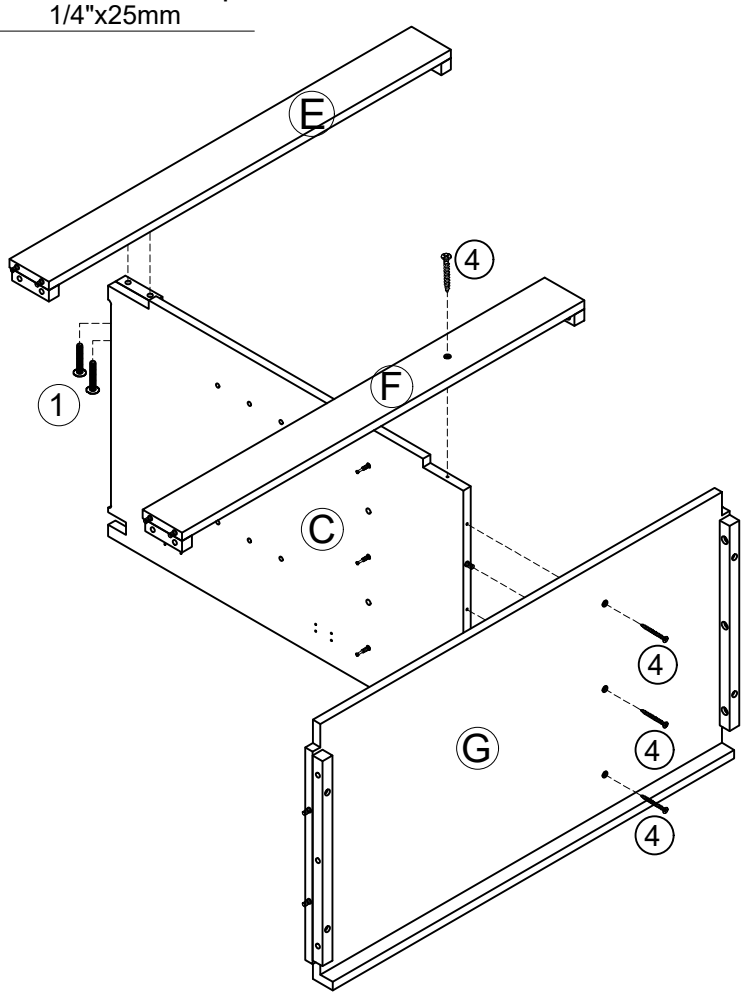

STEP 11

1	 1/4"x25mm	7pcs	14  Ø15x9mm	6pcs

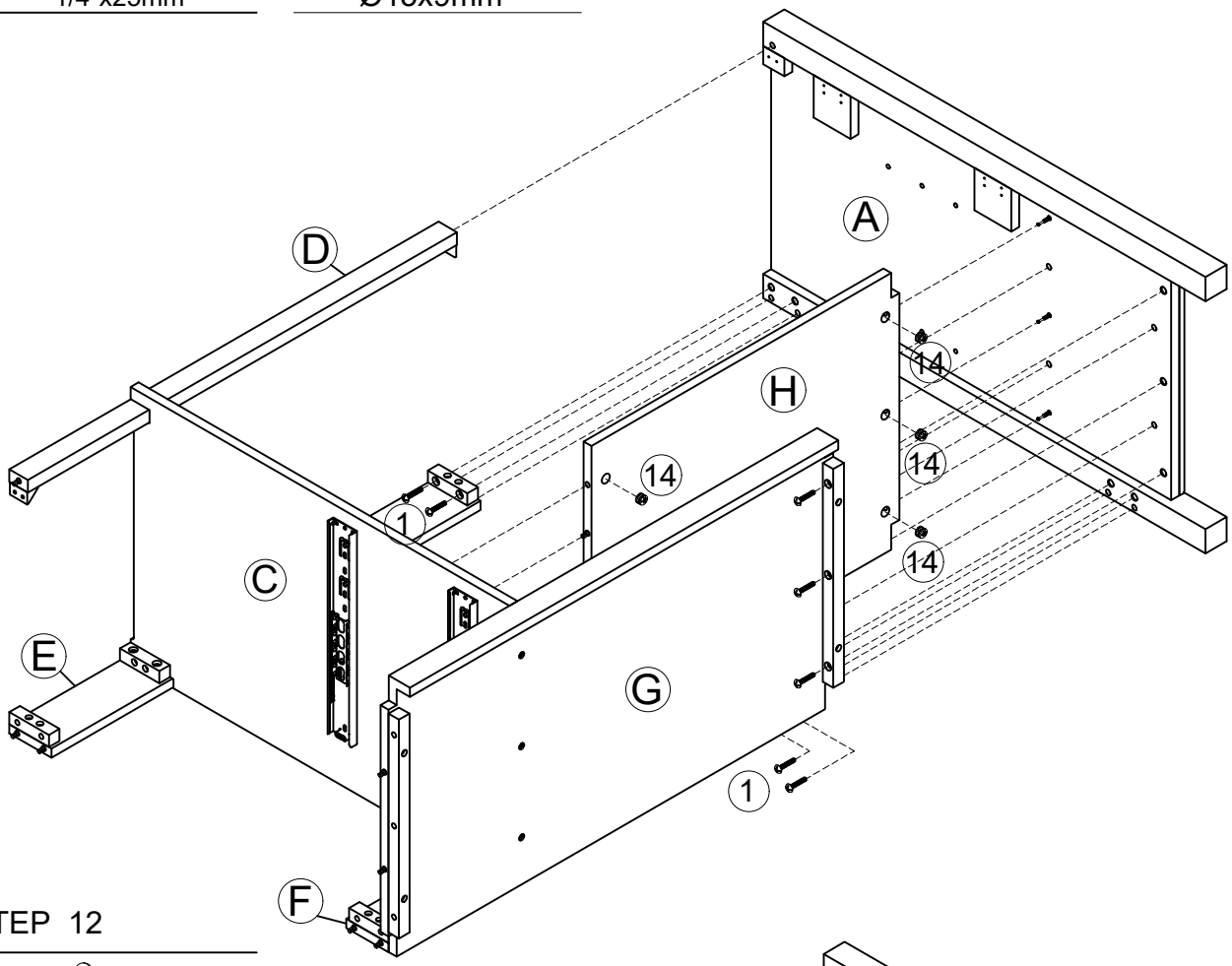

STEP 12

1	 1/4"x25mm	7pcs

STEP 13

5 Ø4x12mm 4pcs

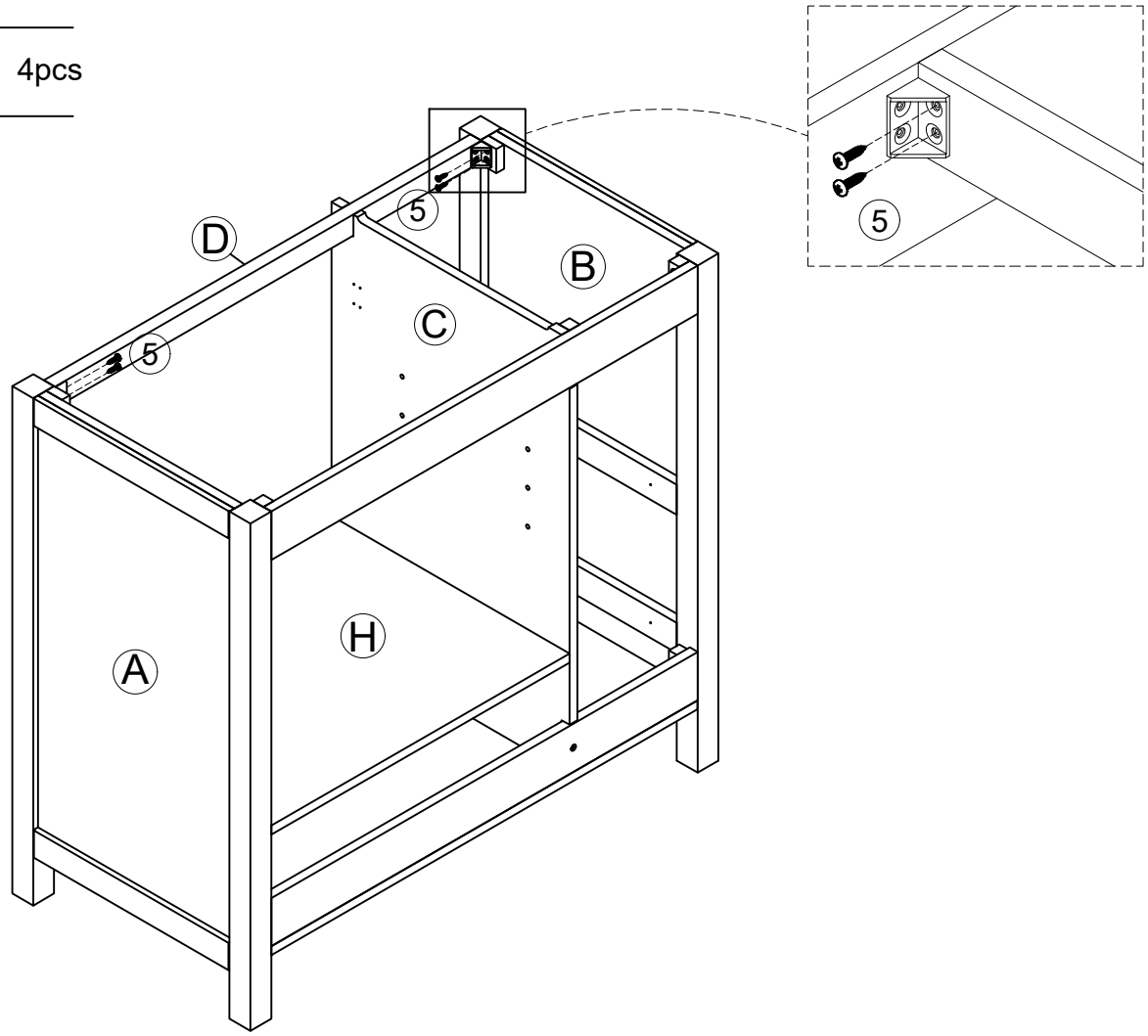

STEP 14

11b 14"x45mm

12 Ø3x10mm 6pcs

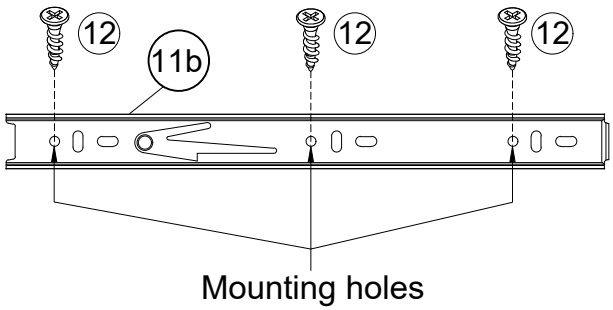

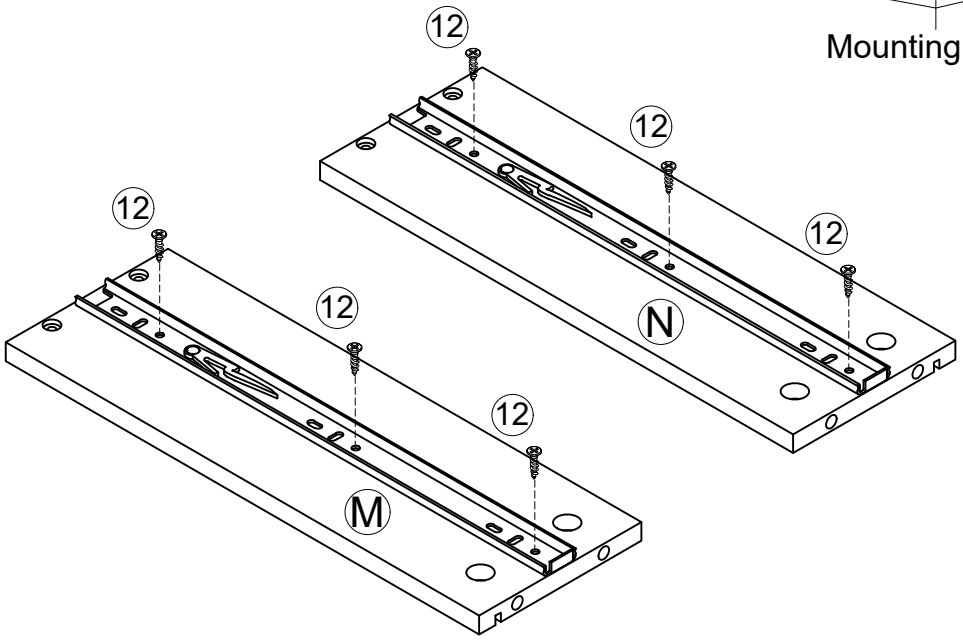

STEP 15

11b 14"x45mm

12 Ø3x10mm 6pcs

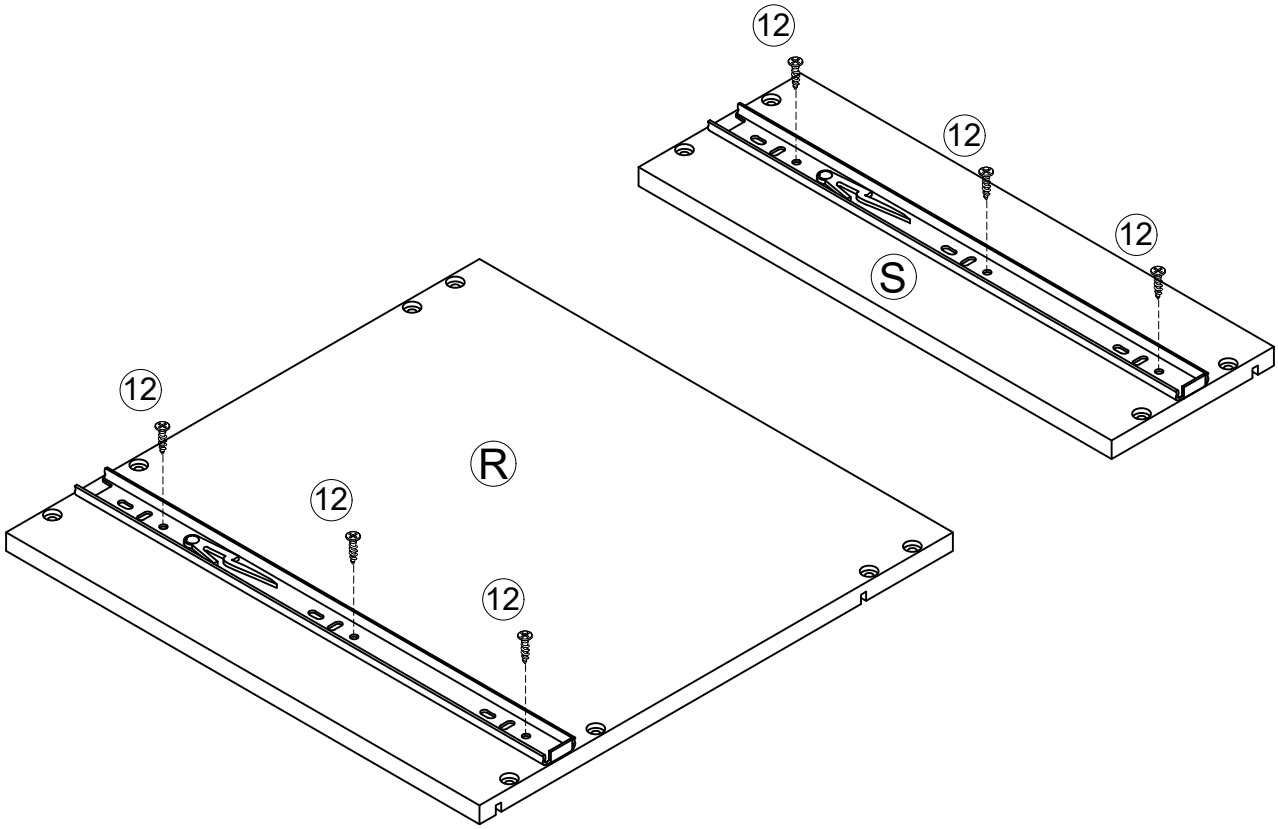

STEP 16

3 Ø4x25mm 4pcs

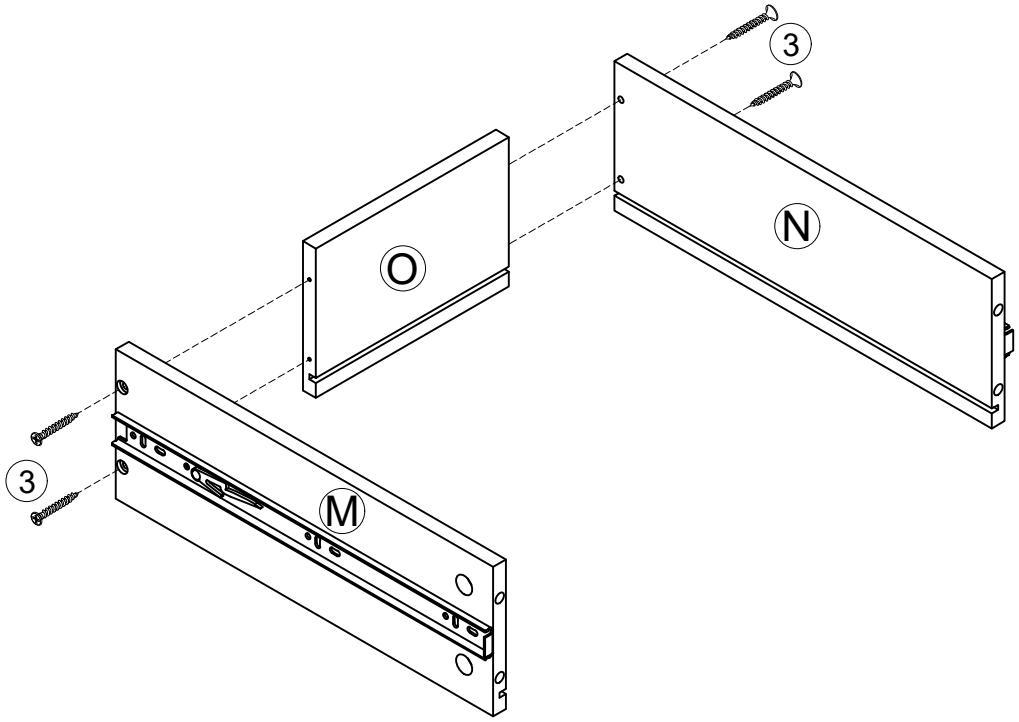

STEP 17

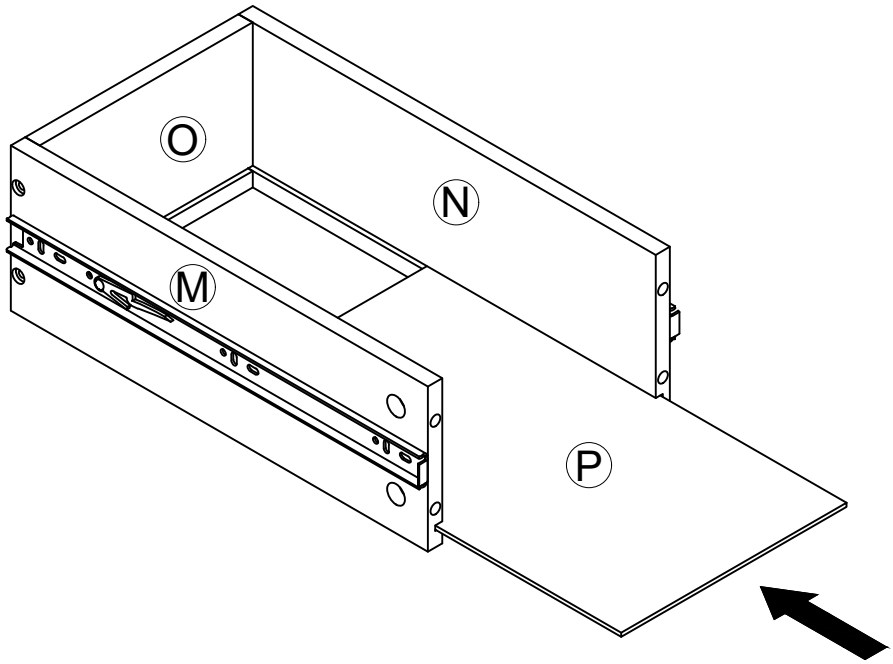

STEP 18

13 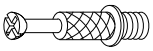 4pcs
Ø6x33mm

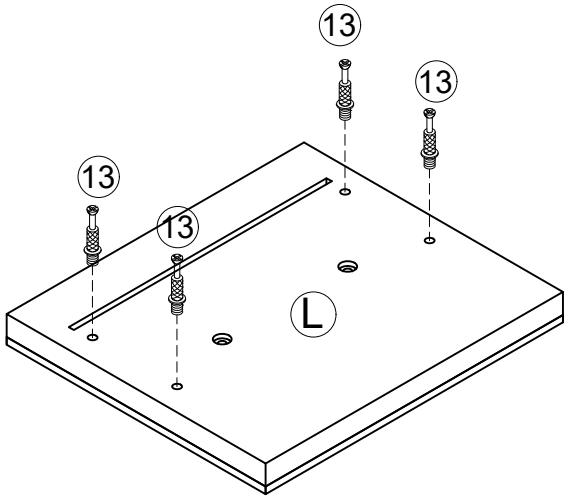

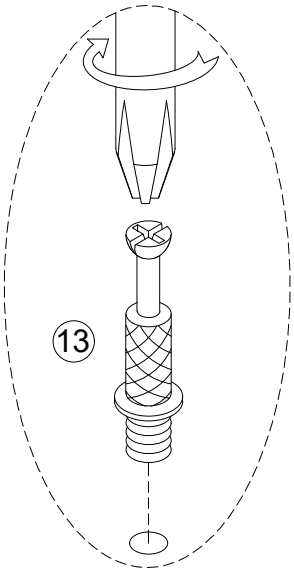

STEP 19

(14)  4pcs
Ø15x9mm

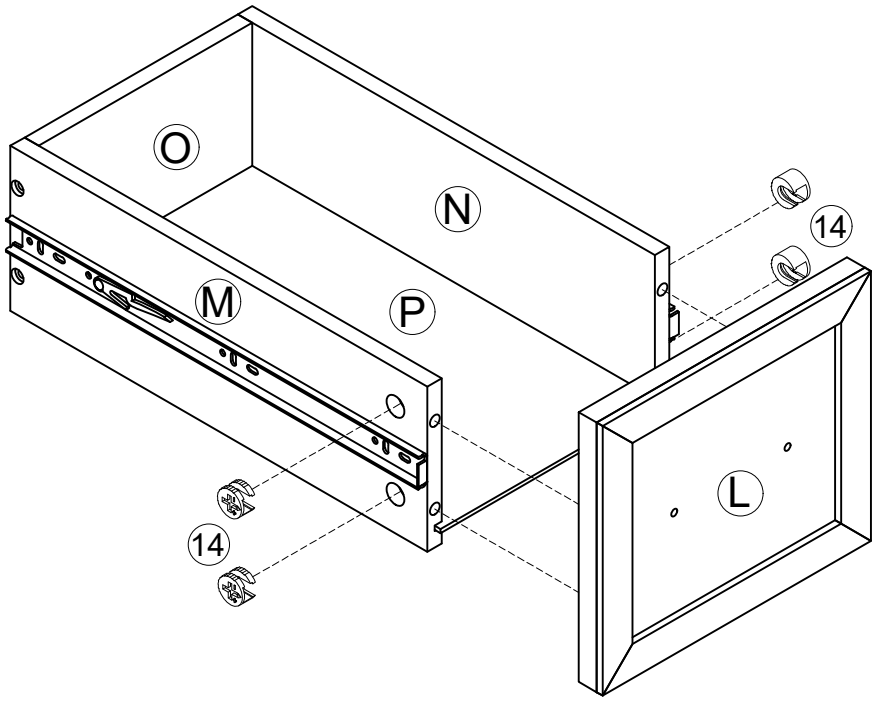

STEP 20

(15)  1pc

(17)  2pcs
5/32"x15mm

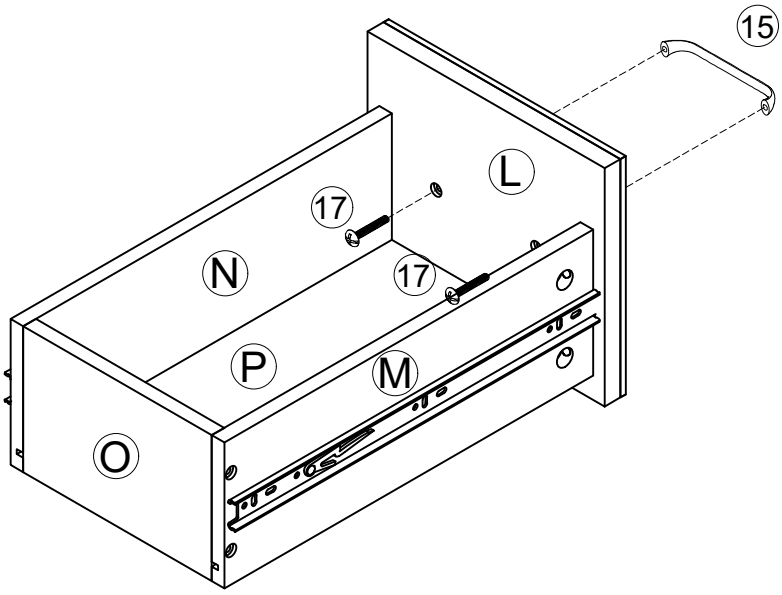

STEP 21

③ 8pcs
Ø4x25mm

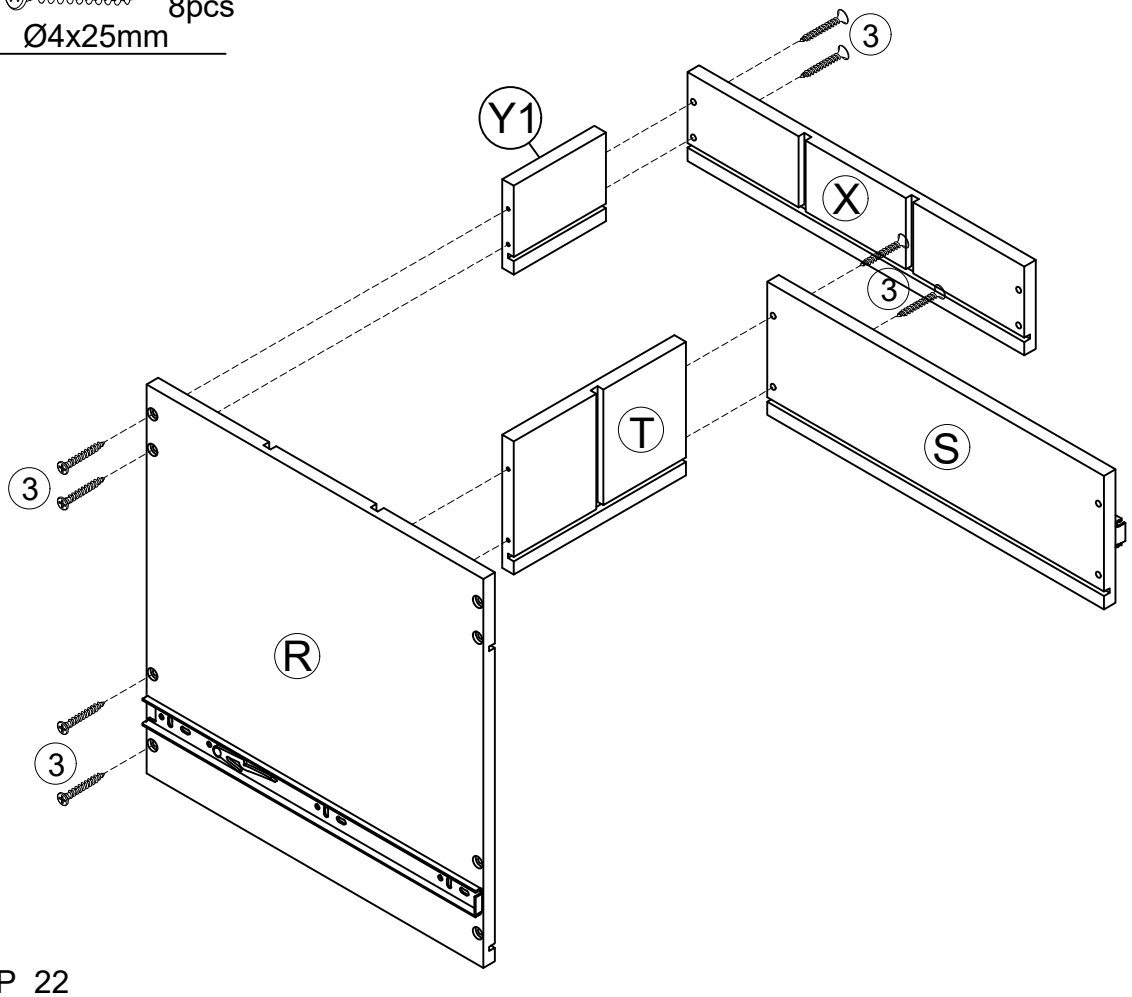

STEP 22

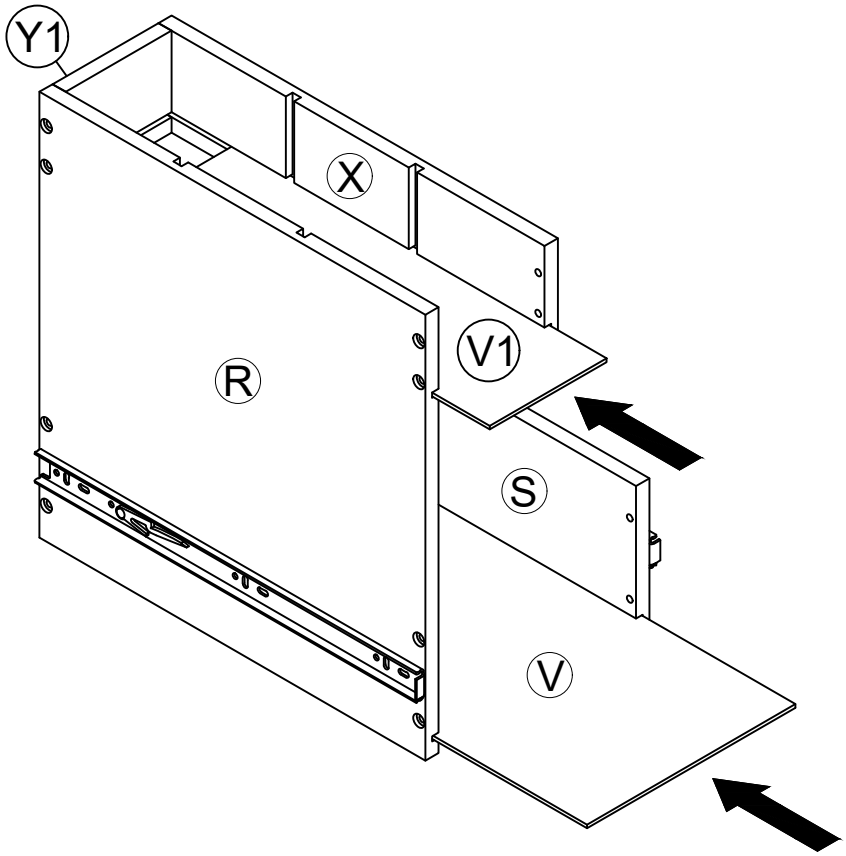

STEP 23

③  8pcs
Ø4x25mm

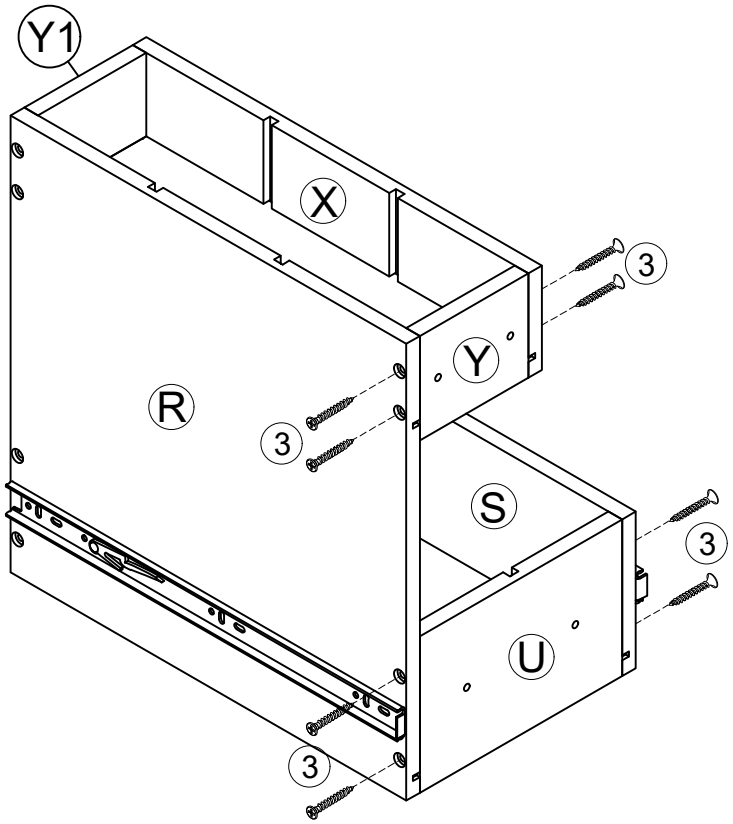

STEP 24

⑮  3pcs

⑰  6pcs
5/32"x15mm

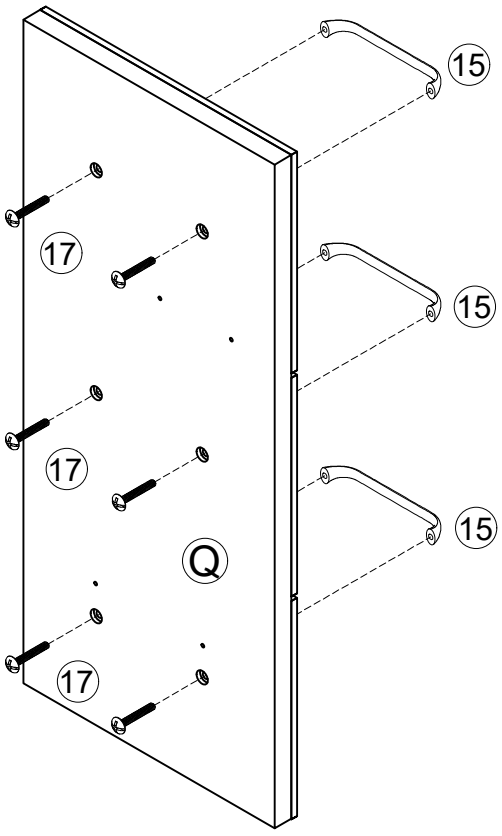

STEP 25

(2)  4pcs
Ø4x20mm

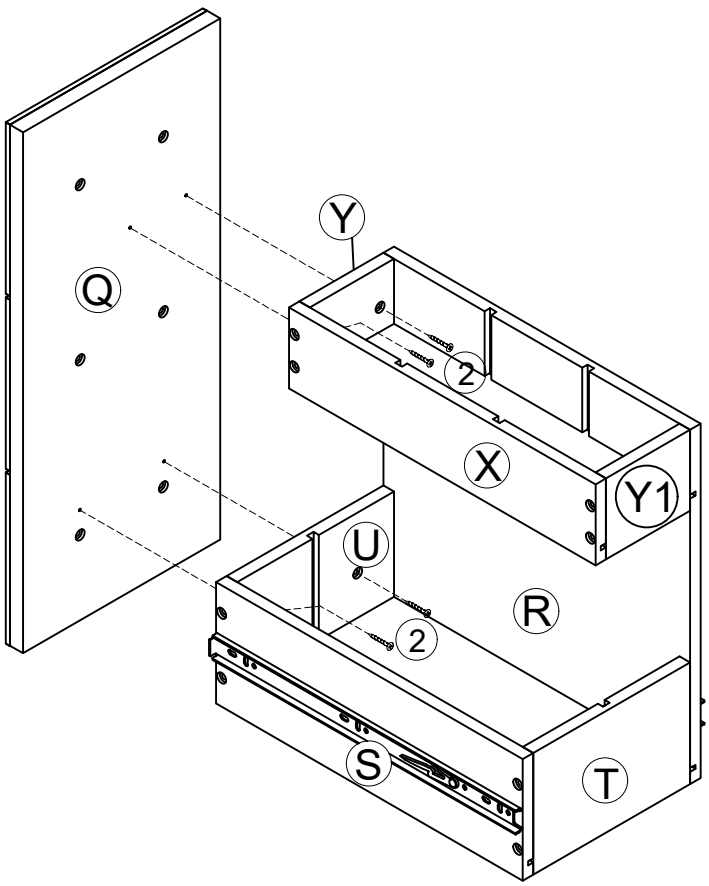

STEP 26

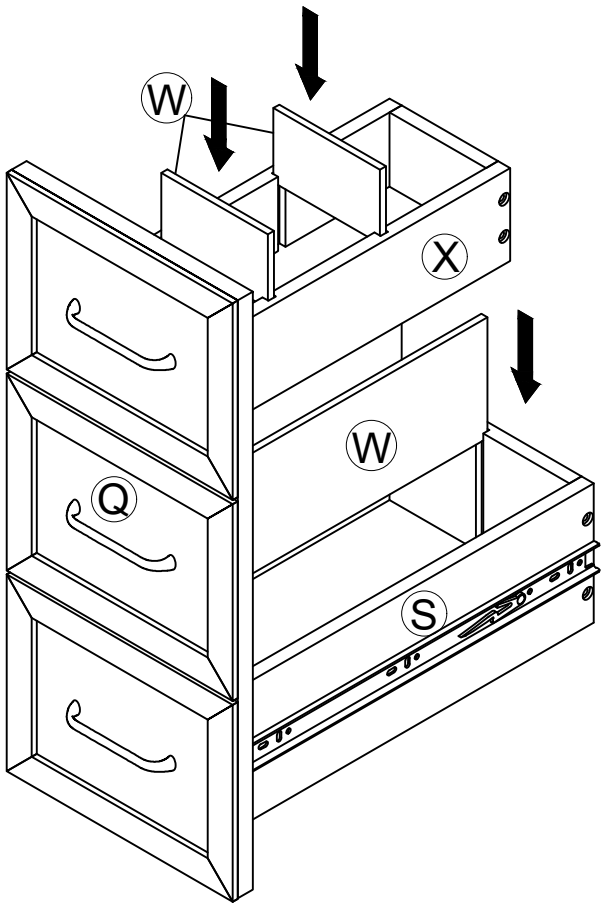

STEP 27

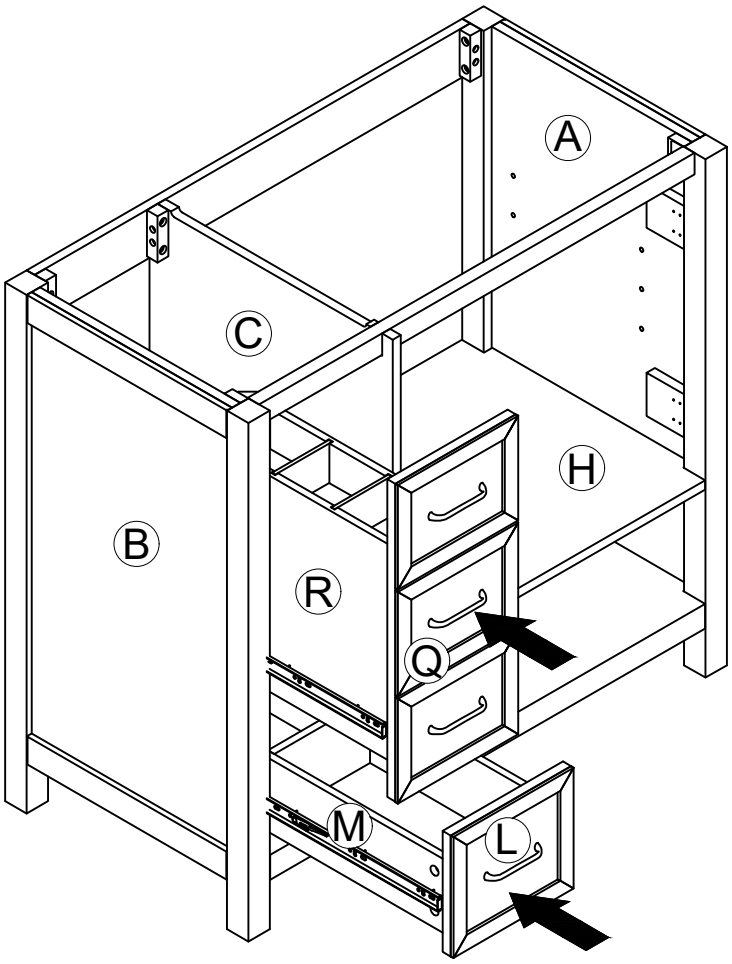

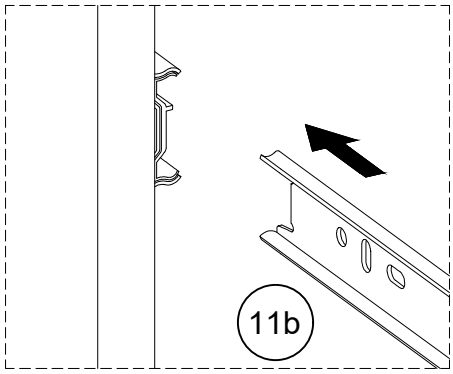

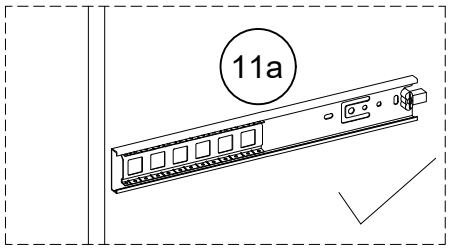

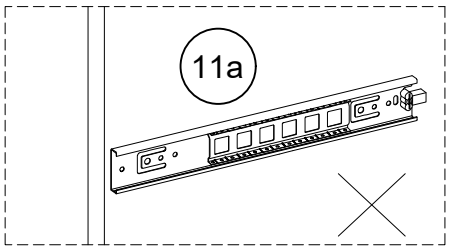

STEP 28

8		4pcs

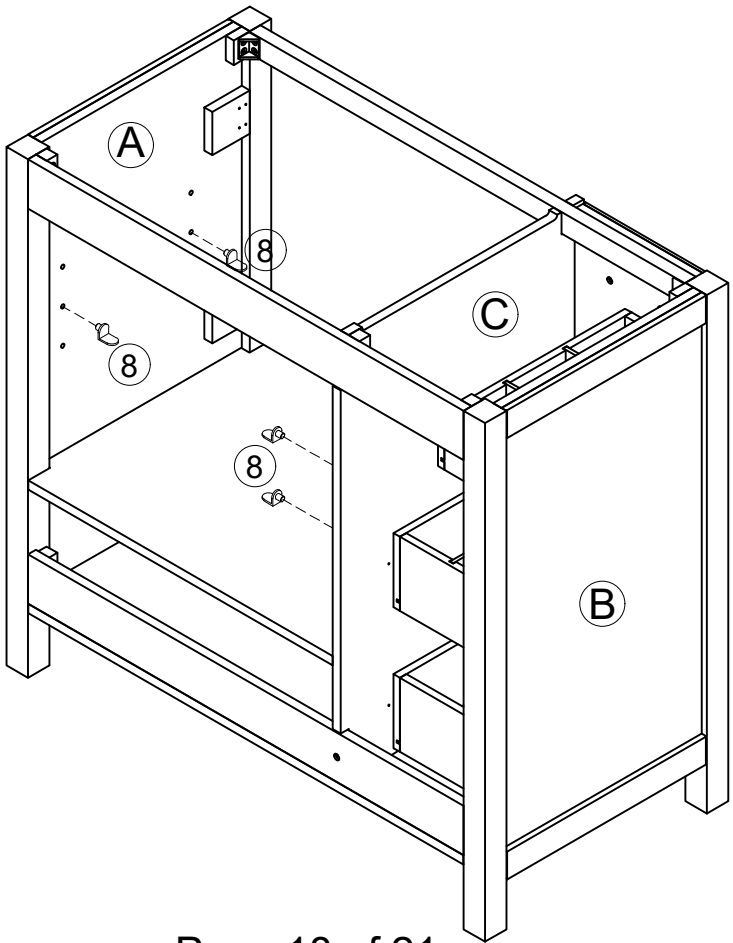

STEP 29

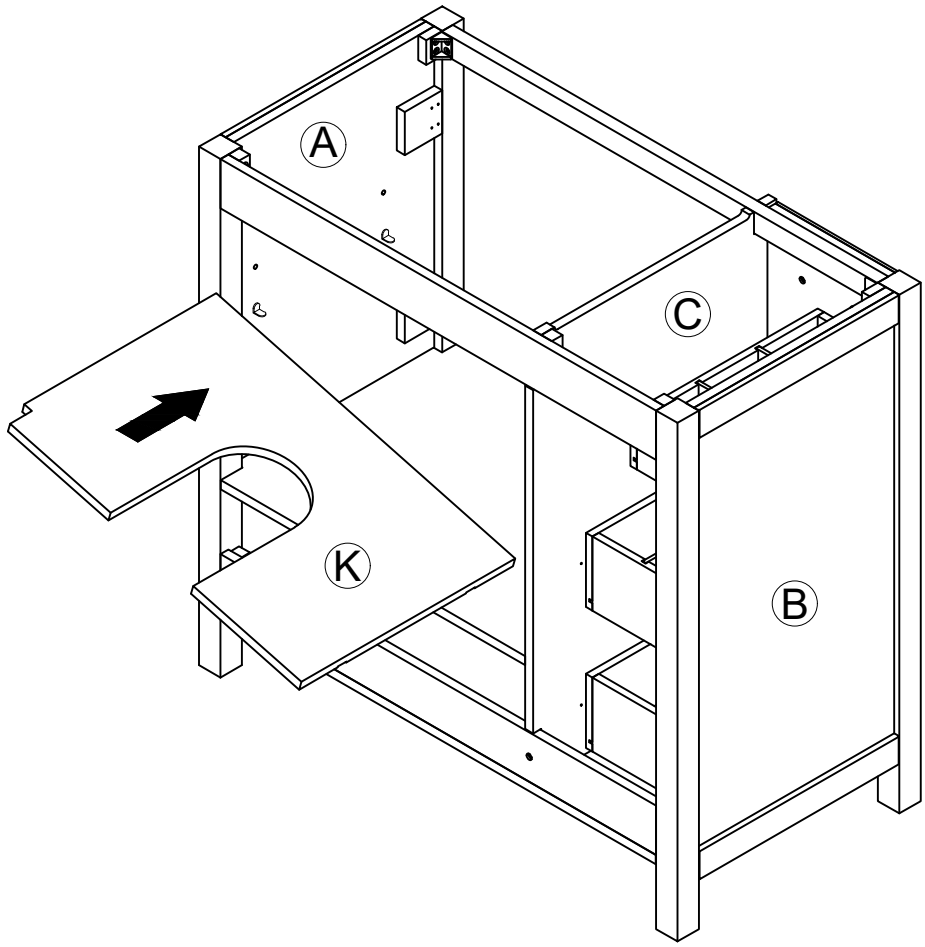

STEP 30

9	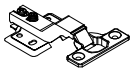	4pcs	10	 Ø4x12mm	8pcs

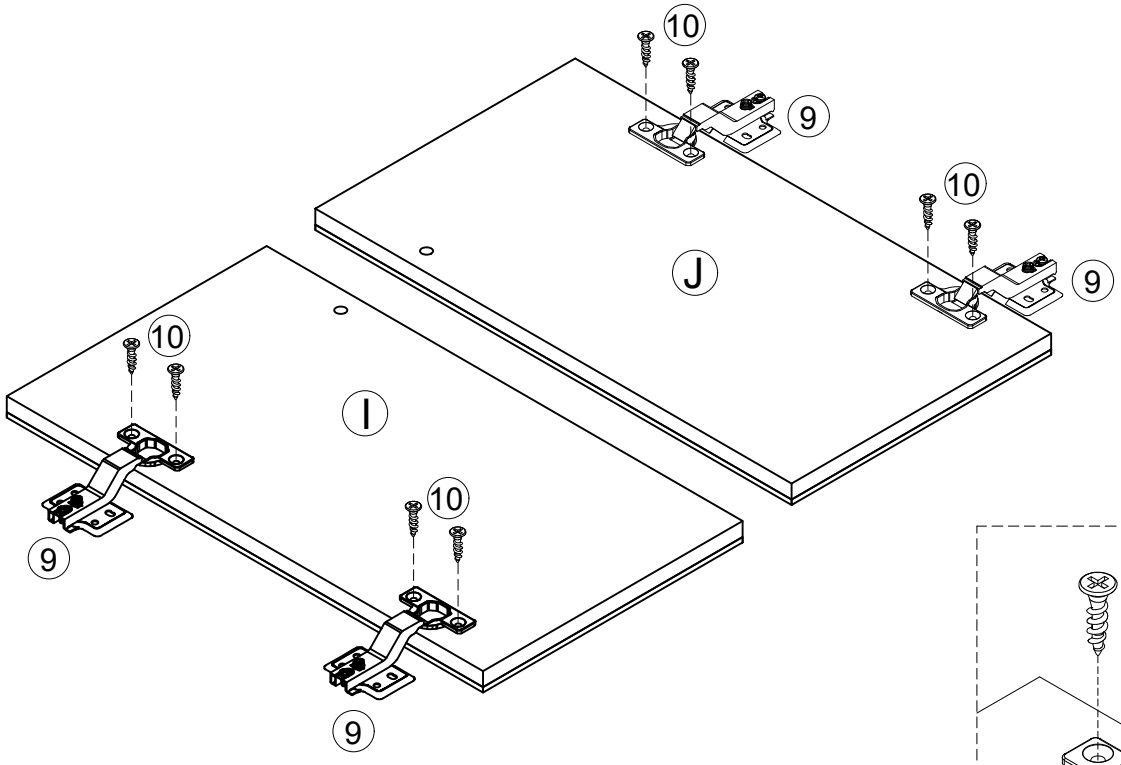

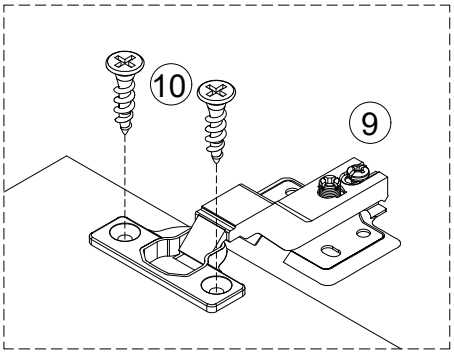

STEP 31

⑩ 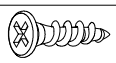 16pcs

Ø4x12mm

Three-way adjustable hinge for perfectly aligned doors

1.TO ADJUST DOOR FORWARD OR BACKWARD.
2.TO ADJUST DOOR TO RIGHT ORTO LEFT.
3.TO ADJUST DOOR UP OR DOWN.

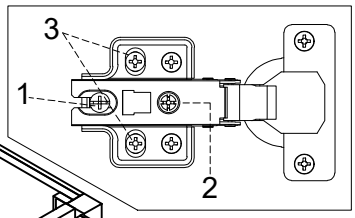

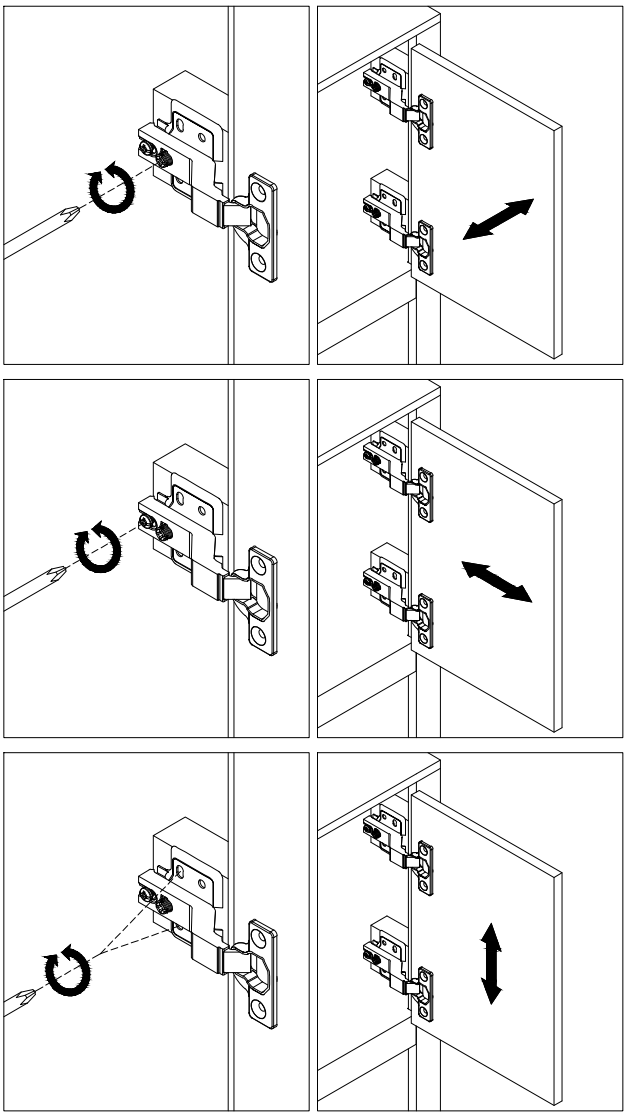

STEP 32

⑯  2pcs

⑰  2pcs

5/32"x15mm

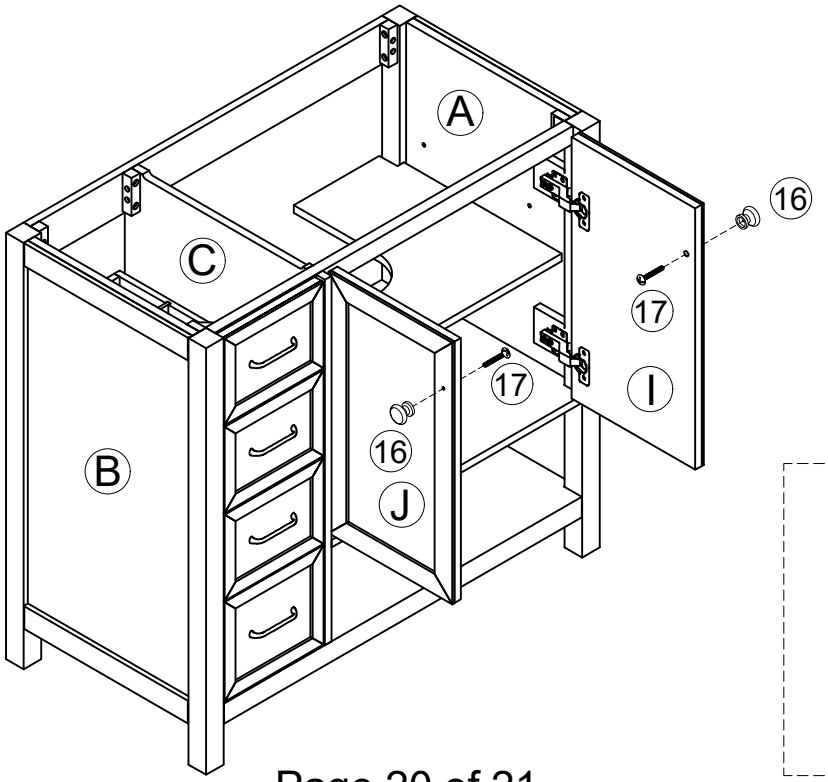

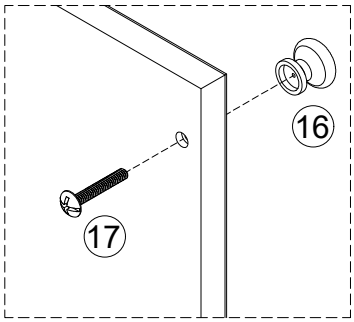

STEP 33

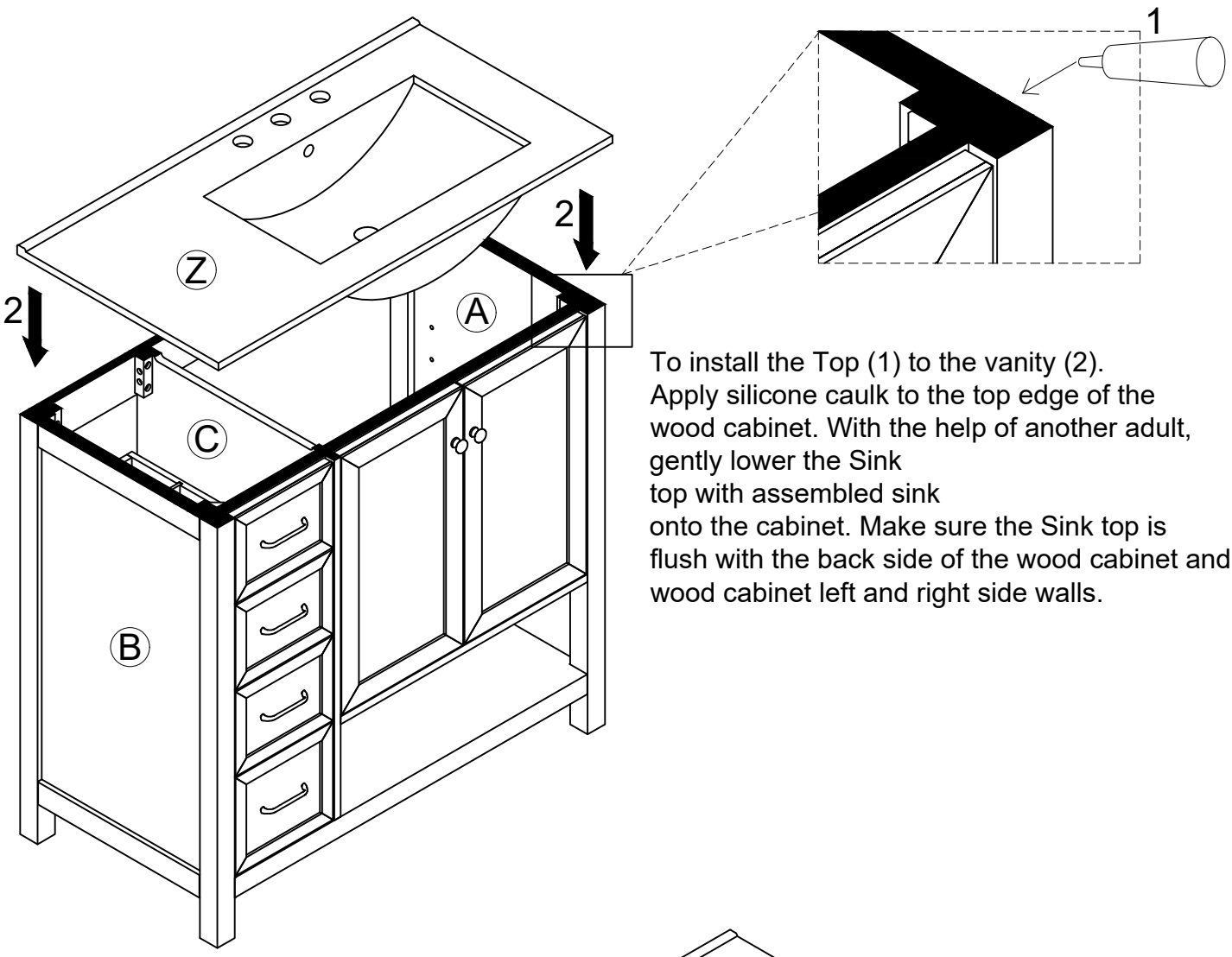

To install the Top (1) to the vanity (2).
Apply silicone caulk to the top edge of the wood cabinet. With the help of another adult, gently lower the Sink
top with assembled sink
onto the cabinet. Make sure the Sink top is flush with the back side of the wood cabinet and the wood cabinet left and right side walls.

STEP 34

