Kids' Electric Vehicles

Product ID. QU3CA

Scan for Support

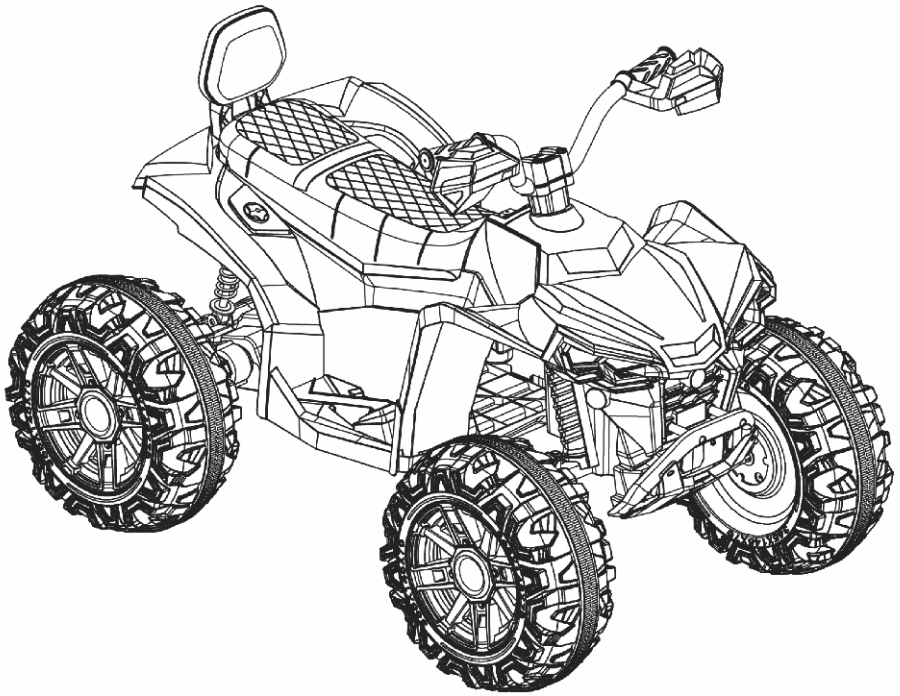

MANUFACTURER: Jinjianfeng Group Pinghu Children Tricycle Co. Ltd

MANUFACTURE ADDRESS: North of Babycar Road, Xincang Town, Pinghu City, ZheJiang. China

US IMPORTER: Favoreliable Trading LLC

IMPORTER ADDRESS: 6545 Market Ave. North, STE 100,North Canton , OH 44721

E-MALL: support@garvee.com

MADE IN CHINA

Distributed by GARVEE.com

support@garvee.com

Table of Contents

1. About Your New Vehicle

2. Parts List

3. Parts Diagram

4. Assembly Steps

5. How To Operation Your Vehicle

6. Charging The Vehicle

7. Troubleshooting Guide

8. Maintaining Your Vehicle

9. Disposal Of Battery

About Your New Vehicle

Thank you for purchasing our products, we want your child to enjoy this product for years to come. Keep these points in mind as you read this guide:

Suitable age	3+years	**Battery**	DC 24 V 7 AH *1
Load Capacity	Under 50KGS	**Size of car**	1090*685*760mm
Speed	4-6Km/h	**Carton size**	1130*650*395mm
Material	PP	**Optimum Temperature**	Below 40°C Avoid to use under burning sun
Charger	Input: Shown on the charger	**Charging time**	8-12 hours,at most 20 hours
	Output: DC 24V	**Fuse**	F15A, Self-resetting
	Current: DC 0.8A		

⚠ WARING!

FOR THE SAFETY OF YOUR CHILD, PLEASE READ ALL WARNINGS AND ASSEMBLY/USE INSTRUCTIONS. KEEP THIS GUIDE FOR FUTURE REFERENCE.

- **ADULT ASSEMBLY REQUIRED.**The product contains small parts, which are for adult assembly only. Keep small children away when assembling.
- Always remove protective material and poly bags and dispose before assembly.
- Not suitable for children under 36 months. Small Parts. Choking hazard.

Disposal Of Battery

Disposal Of Battery

- Your sealed lead-acid battery must be recycled or disposed of in an environmentally sound manner.
- Do not dispose of your lead-acid battery in a fire. The battery may explode or leak.
- Do not dispose of a lead-acid battery in your regular, household trash. The incineration. land filling or mixing of sealed lead-acid batteries with household trash is prohibited by law.
- Return an exhausted battery to your local approved lead-acid battery recycle, such as a local seller of automotive batteries.
- Contact your local waste management officials for other information regarding the environmentally sound recycling and disposal of lead-acid batteries.
- The battery must be charged only by adult. Please charge the product before using!
- The toy should not be connected to excessive powers (more than the quantity specified herein), and it should not be operated during charging process.
- Any rechargeable battery must only be charged under adult's supervision.
- Battery charger shall regularly check the wires, plugs. casing and other parts for damage and found damage should stop using and restored.
- Open the battery cover on the remote control, and put two pieces of batteries, paying attention to batteries polarity. Replace the battery cover and lock with screws (please replace the battery according to the above steps and should be done by adult).
- All batteries should be inserted with the correct polarity.
- Non-rechargeable battery should not be charged, please remove any running-off battery from the toy.
- Do not use old and new batteries together, or mix different types of batteries.
- The battery charger used with the toy are to be regularly examined for damage to the cord plug, enclosure and other parts, and in the event of such damage, they must not be used until that damage had been repaired.

Our products are suitable for

ASTM F963: GB6675.GB19865: EN71 and EN62115 standard

Parts List

PART NO	PART NAME	PICTURE	Q'ty (pcs)	REMARKS	PART NO	PART NAME	PICTURE	Q'ty (pcs)	REMARKS
1	Vehicle body	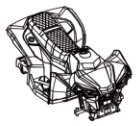	1		2	Bumper	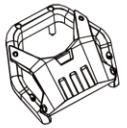	1	
3	Gear box	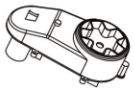	2		4	Wheel		4	
5	Drive parts	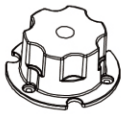	2		6	Backrest	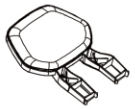	1	
7	Handlebar		1		8	Rear axle		1	
9	Steering shaft		1		10	Bogie	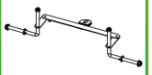	1	
11	M12 Washer		6	Placed in the rear and bogie	12	M10 Nut		6	Placed in the rear and bogie
13	M12 Washer		1	Placed in the Steering shaft	14	M8 Nut		1	Placed in the Steering shaft

Parts List

Assembly package

PART NO	PART NAME	PICTURE	Q'ty (pcs)	REMARKS	PART NO	PART NAME	PICTURE	Q'ty (pcs)	REMARKS
15	Cover		1		16	Wheel hub		4	
17	Spring		2		18	Screw		10	
19	M12 Washer	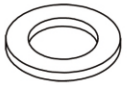	1		20	Split pin	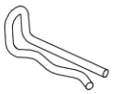	1	
21	Instruction manual		1		22	Charger	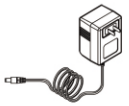	1	
23	M10 Spanner	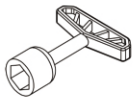	2		24	M8 Spanner	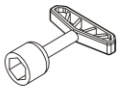	2	

Troubleshooting Guide

PROBLEM: The vehicle does not run very long

POSSIBLE CAUSE: Battery may be undercharged.

You may not be charging the battery long enough. After each use, or once a month minimum, charge the battery for 8 to 12 hours. Do not leave the battery on the charger for more than 20 hours.

POSSIBLE CAUSE: Battery is old.

The battery will eventually lose the ability to hold a charge. Depending on the amount of use, and varying conditions, the battery should operate for one to three years. Replace the battery with a new one.

PROBLEM: Battery buzzes or gurgles when charging.

This is normal and not a cause for concern. It may also be silent when charging, which is also normal.

PROBLEM: Charger feels warm when recharging battery.

This is normal and not a cause for concern

Maintaining Your Vehicle

- It is parents' responsibility to check main parts of the toy before using, Must regularly examine for potential hazard. such as the battery, charge, cable or cord, plug, screws are fastening enclosure of other parts and that in the event of such damage, the toy must not be until that damage had been properly removed.
- Make sure the plastic parts of the vehicle are not cracked or broken.
- Occasionally use a lightweight oil to lubricate moving parts such as wheels.
- Park the vehicle indoors or cover it with a tarp to protect it from wet weather.
- Keep the vehicle away from sources of heat, such as stoves and heaters. Plastic parts may melt.
- Recharge the battery after each use. Only an adult can handle the battery. Recharge the battery at least once a month when the vehicle Raider is not being used.
- Do not wash the vehicle with a hose. Do not wash the vehicle with soap and water. Do not drive the vehicle in rainy or snowy weather. Water will damage the motor, electric system and battery.
- Clean the vehicle with a soft, dry cloth. To restore shine to plastic parts, use a non-wax furniture polish. Do not use car wax. Do not use abrasive cleaners.
- Do not drive the vehicle in loose dirt, sand or fine gravel which could damage moving parts, motors or the electric system.
- When not using, all the electrical source should be turn off. Turn off the power switch and disconnect the battery connection.

Troubleshooting Guide

PROBLEM: The vehicle does not run

PROBLEM CAUSE: The battery may low on power.

After each use, or once a month minimum, charge the battery for 8-12 hours. Do not leave the battery on the charger for more than 20 hours.

POSSIBLE CAUSE: Thermal fuse has tripped.

The vehicle is equipped with a self-resetting fuse. When the vehicle is overloaded or operated incorrectly, the self-resetting fuse will be cut off for 5-20 seconds before becoming operational again. The self-resetting fuse is under the seat (Refer to the picture.)

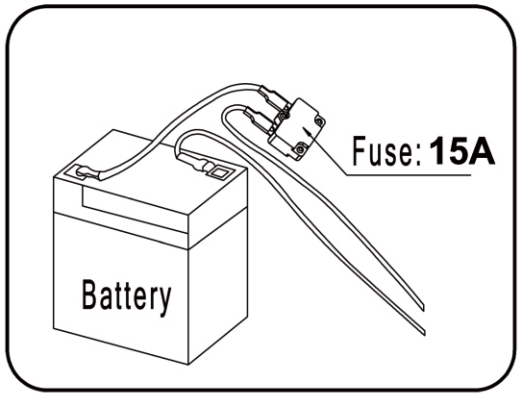

To avoid the fuse cut off the power, follow these guidelines:

DO NOT overload the vehicle, Maximum weightallowed :50KGS
DO NOT tow anything behind the vehicle.
DO NOT drive up steep slopes.
DO NOT drive into fixed objects, which may cause the wheels to spin, causing the motor to overheat.
DO NOT drive in very hot weather, components may overheat.
DO NOT tamper with the electric system, Doingso may create a short circuit, causing the fuse to trip .

POSSIBLE CAUSE: Wheel nuts are loose.

If the nuts are not tight, the wheels will not engage the forward gears. Tighten the nut with the nut wrench.

POSSIBLE CAUSE: Battery connector or wires are loose.

Make Sure the battery connectors are firmly plugged in to each other.

POSSIBLE CAUSE: Battery is dead.

Have you properly maintained the battery according to the directions? Is the battery old? Your battery may need to be replaced.

POSSIBLE CAUSE: Electric system is damaged.

Water may have corroded the system, or loose dirt, gravel or sand might have jammed the switch.

POSSIBLE CAUSE: Motor is damaged.

The motor needs professional repair.

PROBLEM: The battery will not recharge.

POSSIBLE CAUSE: Battery connector or adapter connector is loose.

Make sure the battery connector and adapter connector are firmly plugged together.

POSSIBLE CAUSE: Charger is not plugged in.

Make sure the charger is plugged into the wall outlet and the power flow to the outlet is on.

POSSIBLE CAUSE: Charger is not working.

Is the charger warm while charging? If not, the charger may be broken and may need to be replaced.

NOTE: Some Parts Shown are assembled on both sides of vehicle.

Tools Required

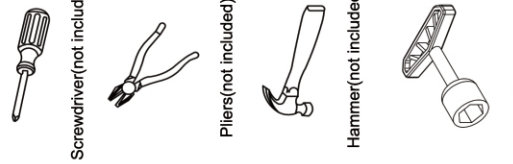

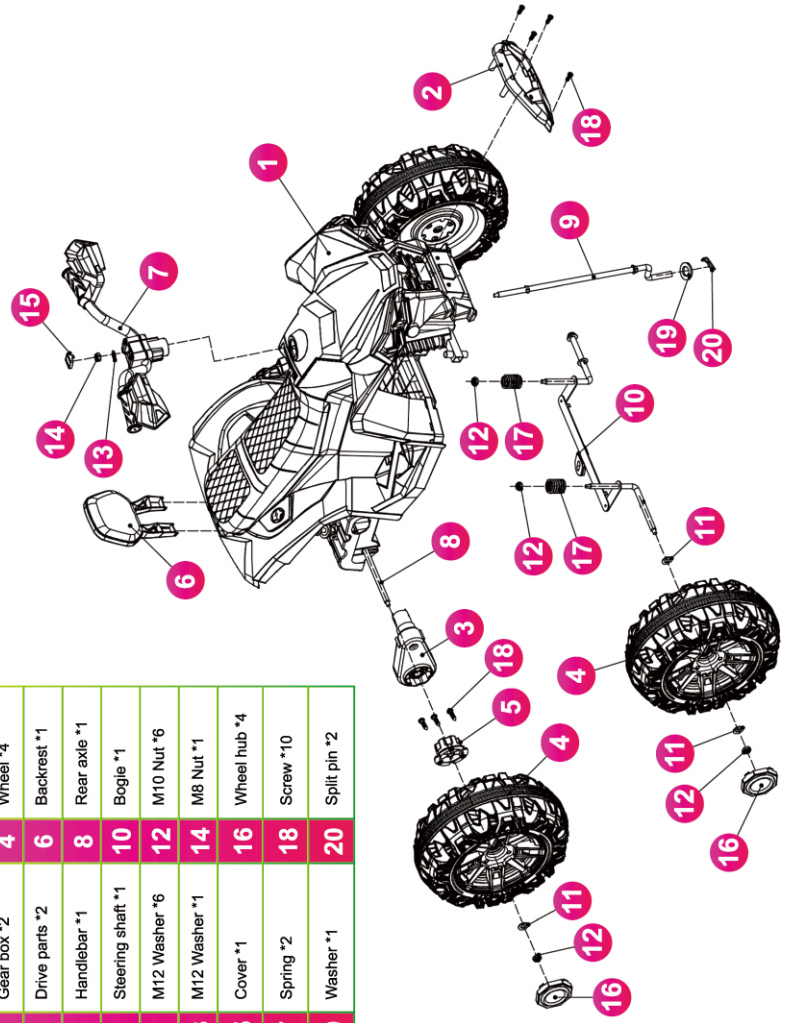

Parts Diagram

1	Vehicle body *1	2	Bumper *1	3	Gear box *2	4	Wheel *4	5	Drive parts *2
6	Backrest *1	7	Handlebar *1	8	Rear axle *1	9	Steering shaft *1	10	Bogie *1
11	M12 Washer *6	12	M10 Nut *6	13	M12 Washer *1	14	M8 Nut *1	15	Cover *1
16	Wheel hub *4	17	Spring *2	18	Screw *10	19	Washer *1	20	Split pin *2

Assembly Steps

Turn over the body before installing the vehicle.
Remove the tie.

1. Install the rear frame.

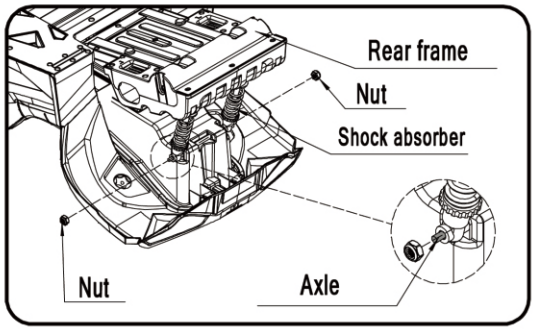

- As shown in the picture, disconnect the axle parts.
- Install the shock absorber to the corresponding place, and fasten with nuts.

2. Install the back wheels.

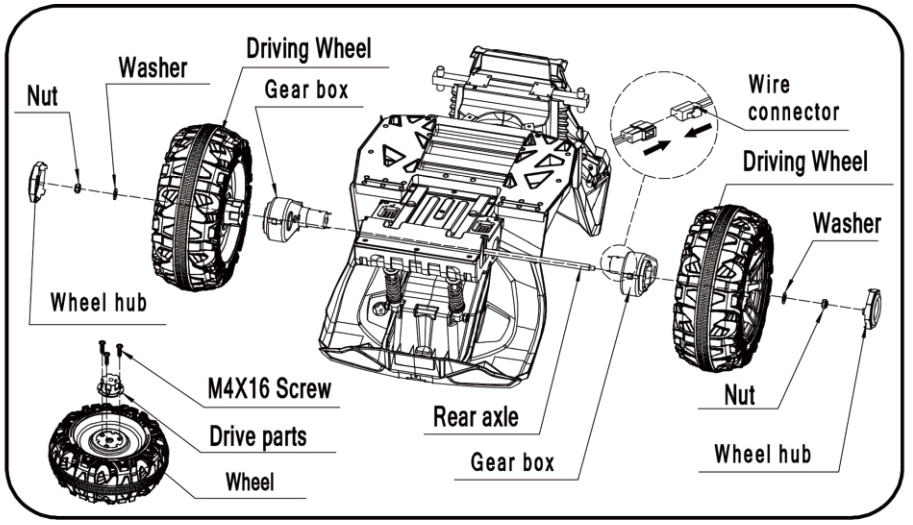

- As shown in the picture,install the drive parts to the wheel, and fasten with the screws.
- As shown in the picture, disconnect the rear axle parts, then put the rear axle through the car body.
- As shown in the picture, the wire connector plug butt, install gear box to the side.
- Put the wheel through the rear axle, then install washers to both sides and fasten with nuts.
- Fix the wheel hub to both sides.

Charging Your Vehicle

⚠ WARING!

PREVENT FIRE AND ELECTRIC SHOCK:

- Explosive gasses are created during charging. Do not charge near heat or flammable materials. Charge the battery in a well-ventilated area ONLY.
- NEVER pick up the battery by the wires or charger. Damage can occur to the battery and may cause a fire. Pick up the battery by the case ONLY.
- Charge the battery in a dry area ONLY.

- Battery posts, terminals and related accessories contain lead and lead compounds, chemicals known to the State of California to cause cancer and reproductive ham. **Wash hands after handling.**
- Do not open the battery. Battery contains lead acid and other materials that are toxic and corrosive.
- Do not open the charger. Exposed wiring and circuitry inside case may cause electric shock.
- Only adults may handle or charge the battery. NEVER allow child to handle or charge the battery. Battery is heavy and contains lead acid (electrolyte).
- Do not drop the battery. Permanent damage to the battery could occur or cause serious injury.
- Before charging the battery, check for wear or damage to the battery, charger, its supply cord and the connectors. DO NOT charge the battery if any damage to parts has occurred.
- Do not allow the battery to drain completely. Recharge the battery after each use or once a month if not used regularly.
- Do not charge battery upside down.
- Always secure the battery with the bracket. Battery can fall out and injure a child if vehicle tips over A recommendation for adult supervision of young children.
- The toy should be used with caution since skill is required to avoid falls or colisions causing injury to theuser or third parties.

- The charging input socket is **BELOW THE SEAT.**
- The **POWER SWITCH** must be turned in **OFF** position when charging.
- Before the first use, you should charge the battery for 8-12 hours. Do not recharge the battery for more than 20 hours to avoid overheating the charger.
- When the vehicle begins to run slowly, recharge the battery.
- After each use or once a month minimum recharge time as 8 to 12 hours, no more than 20 hours.

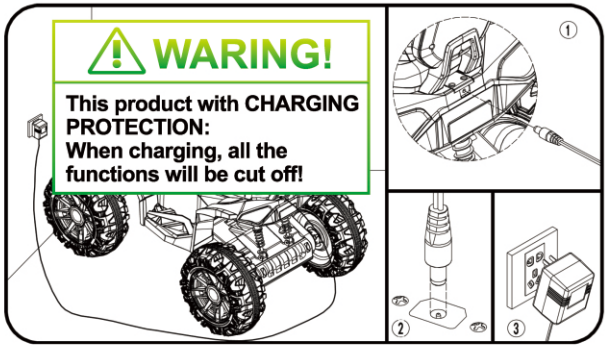

1. Find the charging input socket below the backrest,
2. Plug the charger port into the input socket,
3. Plug the charger plug into a wall outlet. The battery will begin charging.

How To Operate Your Vehicle

Circuit diagram

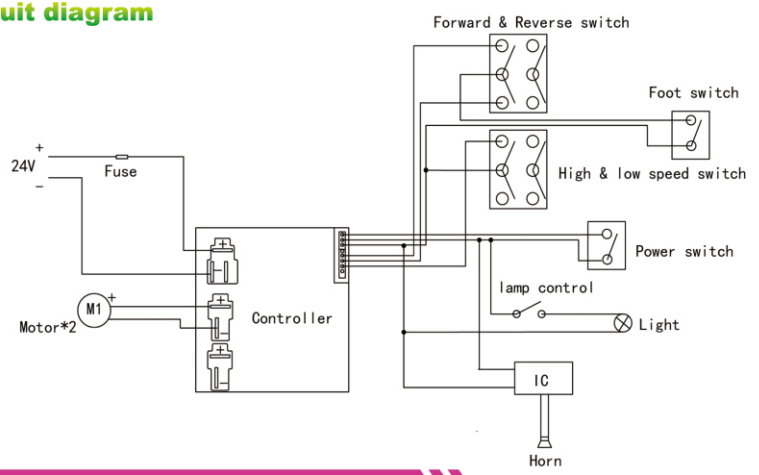

Charging Your Vehicle

ONLY AN ADULT CAN CHARGE AND RECHARGE THE BATTERY!

- Non-rechargeable batteries are not to be recharged.
- Do not mix old and new batteries.
- Do not mix alkaline standard (carbon-zinc), or rechargeable (nickel-cadmium) batteries.
- Batteries are to be inserted with the correct polarity.
- Exhausted batteries are to be removed from the toy.
- The supply terminals are not to be short-circuited.
- Rechargeable batteries are only to be charged under adult supervision.
- Rechargeable batteries are to be removed from the toy before being charged.
- The transformers or battery charger used with the toy are to be regularly examined for damage to the cord, plug, enclosure and other parts, and in the event of such damage, they must not be used until that damage had been repaired.

⚠ WARING!

PREVENT FIRE AND ELECTRIC SHOCK:

- Use the only rechargeable battery and charger supplied with your vehicle. NEVER substitute the battery or the charger with another brand. Using another battery or charger my cause a fire or explosion.
- Do not use the battery or charger for any other product. Overheating, fire or explosion could occur.
- NEVER modify the electric circuit svstem. Tampering with the electric system may cause a shock, fire or explosion or my permanently damage the system.
- Do not allow direct contact between battery terminals. Fire or explosion can occur.
- Do not allow any type of liquid on the battery or its components.

Assembly Steps

3. Install the steering shaft.

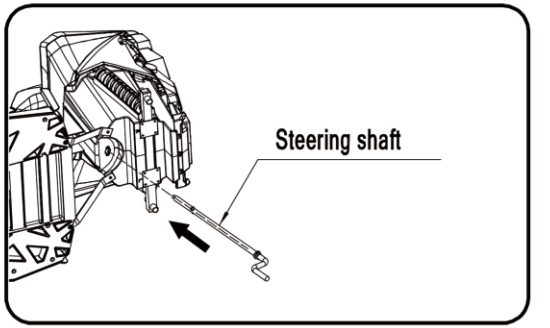

- As shown in the picture, Insert the straight end of steering shaft through the hole in the vehicle body and out through the hole in the dashboard.

4. Install the spring and bogie.

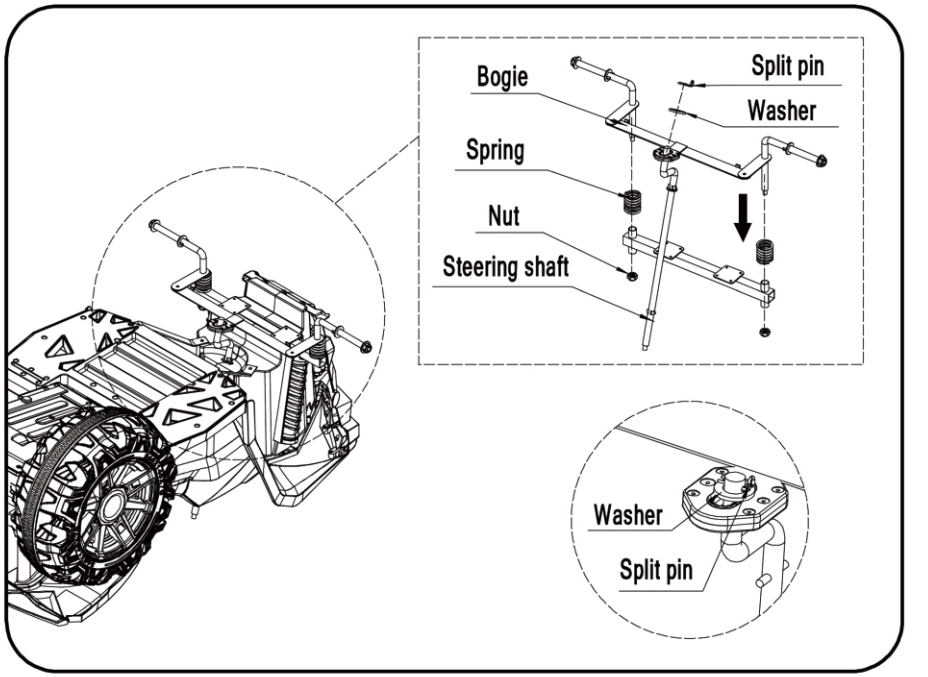

- As shown in the picture, install the spring and bogie to the corresponding place, and insert the steering shaft into the hole in the bogie, and fasten with nuts and split pins and washer.

Assembly Steps

5. Install the front wheel.

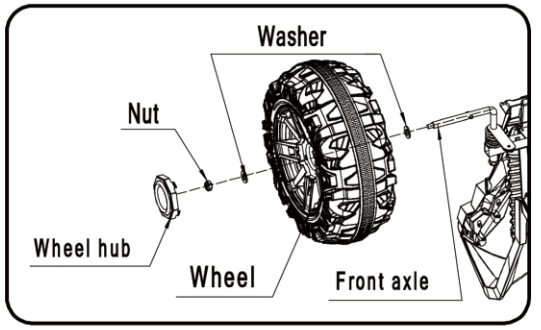

- Remove the nut and washer on the front axle.
- As shown in the picture, fix the washer, wheel, washer and nut onto the axle in proper order.
- Fasten the nut with spanner.
- Fix the wheel hub.

6. Install the handlebar.

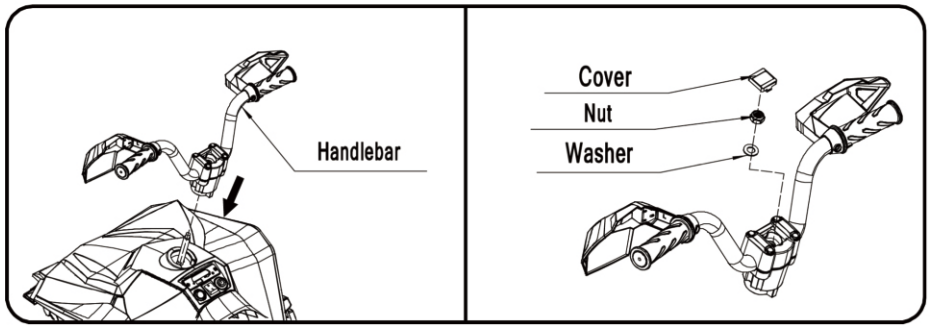

- As shown in the picture, install the handle bar, and fasten with the washer and nut, then install the cover.

How To Operate Your Vehicle

(7) How to use the Sound System & Battery Indicator

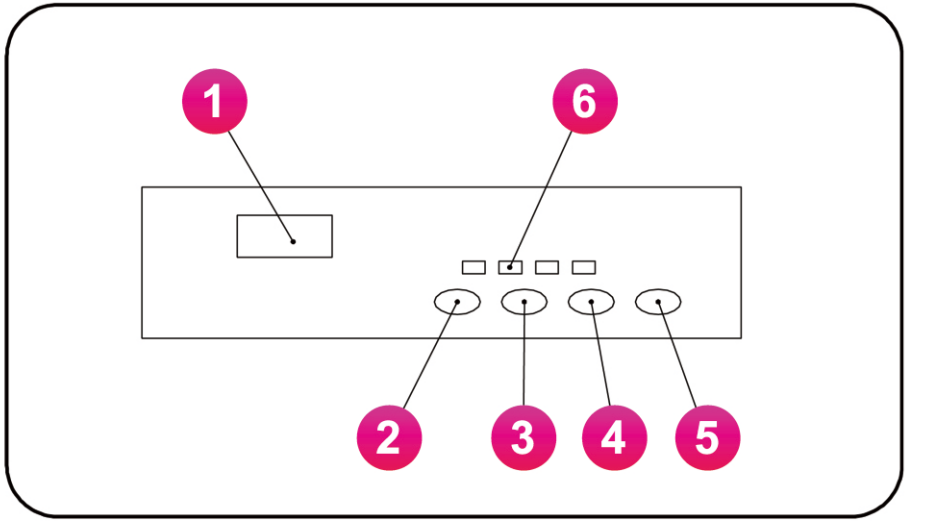

- 1. Storage device slot.
- 2. Mode button: Convert the car between music play mode and smart connection mode.

  Note: The car could be searched and connected by & with the mobile in smart connection mode, to play mobile sound source.
- 3. Music Button: Press to play music.
- 4. Decrease volume.
- 5. Increase volume.
- 6.Power Display: Shows battery power and charge level.

How To Operate Your Vehicle

Use Operation (Ensure the power switch has been turned on).

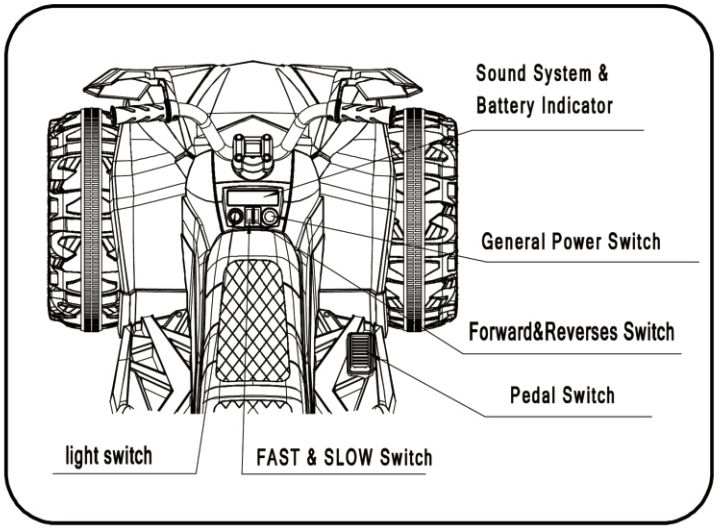

IMPORTANT!

Always stop vehicle when changing the speed or direction to avoid damage the gear box and motor.

(1) Turn on the general power switch first, the music can be played.

(2) Forward

Press the "Forward and Reverse switch" to the " ⬆ " position.

Press the pedal.

The vehicle drives forward.

(3) Stop

Remove foot from the accelerator pedal to stop the car!

(4) Reverse

Press the "Forward and Reverse switch" to the " ⬇ " position.

Press the pedal.

The vehicle drives backward

(5) Turn on the "FAST and SLOW Switch" , control the speed of the car.

(6) Turn off the " light switch", the light is not bright.

Assembly Steps

7. Install the rear bumper.

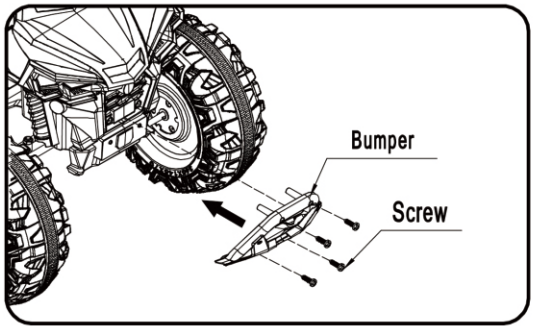

- As shown in the picture, install the rear bumper, and fasten with screws.

8. Connect the power supply.

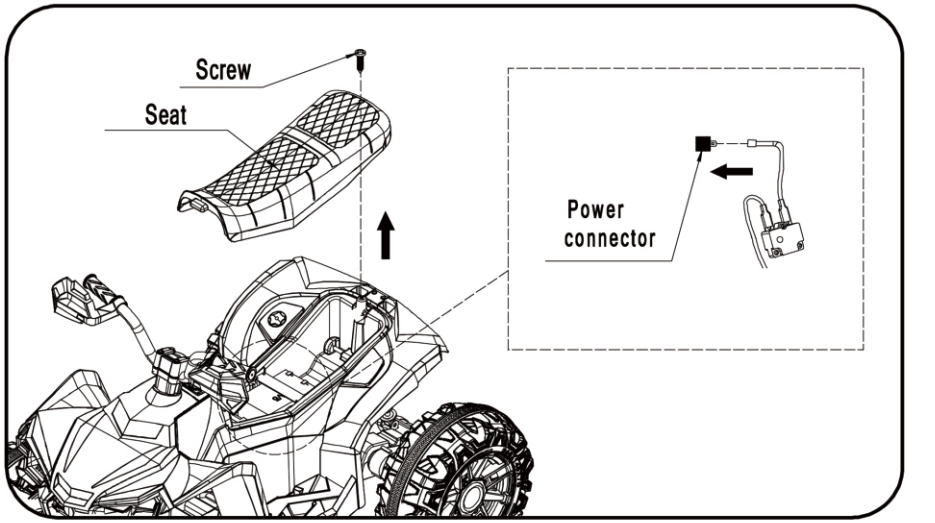

- As shown in the picture, unscrew the screw, and open the seat.
- Plug the power connector into the terminal on battery as shown.

Assembly Steps

9. Install the backrest.

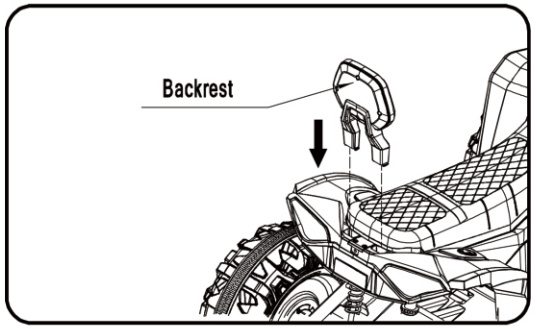

- As shown in the picture, press the backrest downward.

IMPORTANT SUPPLEMENT TO INSTRUCTION MANUAL

After assembling any wheel to the axles, maintain a small gap between the screw thread and the wheel (refer to picture) If the gap is too big, add two or three washers inside the wheel After tightening the nut outside the wheel, turn the wheel by your finger to check if the wheel can run smoothly. This is very important, because if the wheel turns smoothly, it is ok. If the nut is over tightened and prevents the wheel from rolling freely it may cause damage to the motor. Reduce the number of washers until the wheel turns freely.

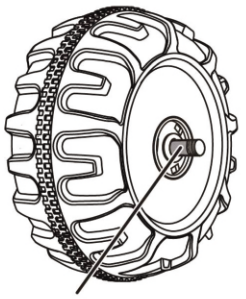

How To Operate Your Vehicle

⚠ WARING!

PREVENT INJURIES AND DEATHS:

- **NEVER LEAVE CHILD UNATTENDED. DIRECT ADULT SUPERVISION IS REQUIRED.** Always keep child in view when child is in vehicle.
- Never use in roadways, near cars, on or near steep inclines or steps. swimming pools or other bodies of water.
- Always wear shoes and never allow more than one rider.
- Always sit on the seat.
- Suitable for age 3+ years; Maximum user weight is 50KGS
- Not to be used in traffic. This toy has no brake.
- This toy is unsuitable for children under 3 years due to its maximum speed.

Must confirm before using that following work which is already finished:

- **Important!** Before using the vehicle for first time, the battery needs to be charged for 8 to 12 hours.no more than 20 hours. Only an adult can charge or recharge the battery.
- Finishing the complete car to assemble according to the steps that the manual described. The plug-in package of storage battery has already been inserted well, the power has already been put through.
- All places to need the screw guarantee the screw has already been locked.

Rules for Safe Riding

READ THESE RULES ALOUD TO YOUR CHILD AND THEIR PLAYMATES AND MAKE SURE THEY UNDERSTAND THEM!

- This toy is no break. Always wear a helmet and protective clothing when riding.
- Direct Adult Supervision Required.
- Keep Children within Safe Riding Areas.
- Never driving in roadway, near motor vehices, on lawn space, on near steep inclines or steps, swimming pools or other bodies of water.
- Use the toy only on flat surfaces. such as inside your house, garden or playground.
- Never use in the dark. A child could encounter unexpected obstacles and have an accident. Operate the vehicle only in the daytime or a well-lit area.
- It is not recommended to drive the vehicle on wet surfaces or on lopes of greater than 15 degrees.
- Do not use this vehicle outdoors when it is raining or snowing.
- Make sure you come to a complete stop before changing directions from forward to back.
- Please follow the correct weight and age limits allowed to drive this vehicle.
- It is prohibited to change the circuit or add other electric parts
- Inspect wires and connections of the vehicle periodically.
- In order to avoid accidents, please ensure the vehicle is safe before riding.
- Do not let any child touch the wheels or be near them when the car is moving.
- This vehicle has adjustable play seat belts. please instruct children how to tie the safety belt before using, guarantee the security.