Installation Guide

⚠ For installation help, missing or replacement parts - **PLEASE CONTACT KARRAN FIRST**

1-866-452-7726
info@karran.com

Register Online:

www.karran.com/productregistration

Tools you may need:



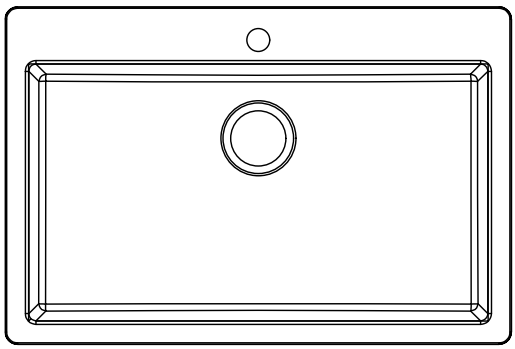

Image is for reference only

TOP MOUNT QUARTZ KITCHEN SINKS

QT-610, QT-670, QT-710, QT-711, QT-712, QT-810, QT-811, QT-812, QT-814, QT-820, QT-825, QTWS-875, QTWS-880

Save this instruction sheet for future reference

We reserve the right to update product installation instructions without notice. Please visit karran.com for the most current installation instructions.

REV. 09/09/2026

Read these instructions thoroughly before you begin.

Always inspect the sink closely for damage prior to installing. Do not install a damaged sink.

Take care when handling a quartz sink as they are heavy.

Adhere to all local building and plumbing codes.

This product is likely to perform best when installed by a licensed professional. The failure to follow these instructions or to hire a professional when needed may result in personal injury or property damage and may void the warranty.

The sink comes with a paper template. Alternatively a DXF file can be downloaded from www.karran.com for use with a CNC machine.

When installing into any type of countertop material, always use a quality silicone sealant and clips provided with your sink.

Specialized tools may be necessary to install a quartz sink with countertop materials such as wood, marble or granite.

QUARTZ/GRANITE SINK CARE AND MAINTENANCE

Your Karran quartz sink is produced from the highest quality natural quartz crystals and acrylic resins. With the right care it will last a lifetime. Cleaning and caring for your quartz sink is easy. Simply follow the simple reference guide below.

Do

- Luster Pro cleaning oil available from your local dealer or online retailer, is a specially formulated oil-based cleaning solution. It is perfect for giving your quartz sink that extra shine and sparkle when needed. After thoroughly cleaning and drying, place a small amount (size of a quarter coin) in the bowl and wipe all over the surface of the sink with a cloth. Apply more if needed and use it as often as desired.

Normal impurities

- Residue from washing up - Clean your sink with water, a non-abrasive cleaner (liquid dishwashing soap, Bar Keepers Friend, Soft Scrub with bleach), and a cloth, then rinse well and dry. This should be done after every use. Doing this will eliminate water spots and soap film build-up.

Metal abrasions

- Created by the day to day use of pots, pans, and cutlery - Use a rub-out sponge (Mr. Clean Magic Eraser sponge). Follow up by cleaning your sink with water, liquid dishwashing soap, and a cloth, then rinse well and dry.

Limescale stains

- Calcium deposits - Use vinegar or a commercial limescale & rust remover such as Lime-Away or CLR. With vinegar, dilute 50% with water and let it soak into the affected areas for 20 minutes. Scrub area thoroughly with a Mr. Clean Magic Eraser sponge.Rinse thoroughly then dry. With a commercial limescale & rust remover, follow the directions for use on the packaging, then rinse the sink thoroughly and dry.

Stubborn stains

- Use a mild abrasive cleaner such as Bar Keeper’s Friend and a soft scouring pad. A diluted bleach solution may also be used. Mix 1 part household bleach with 1 part water and spray over sink's surface and let sit for 1 hour. Scrub area thoroughly with a Mr. Clean Magic Eraser sponge then drain, rinse thoroughly, and dry. Do this whenever necessary.

DON’T

- Never leave soaps, detergents or other cleansers on your sink’s surface to dry. Most contain chlorides and chemicals that could, if left on the sink’s surface, damage it.

- Do not soak your sink with concentrated bleach. Bleach, and most soaps and detergents, contain chlorides that will damage your sink if left on the surface for an extended period of time.

- Water quality in your area may affect your sinks appearance. When water has a high iron content, it may leave a brown stain on your sink. Over softened water will leave a white film on the sink’s surface. Thorough rinsing and towel drying will help alleviate these issues.

Follow these simple maintenance tips to keep your sink looking its best for years.

1

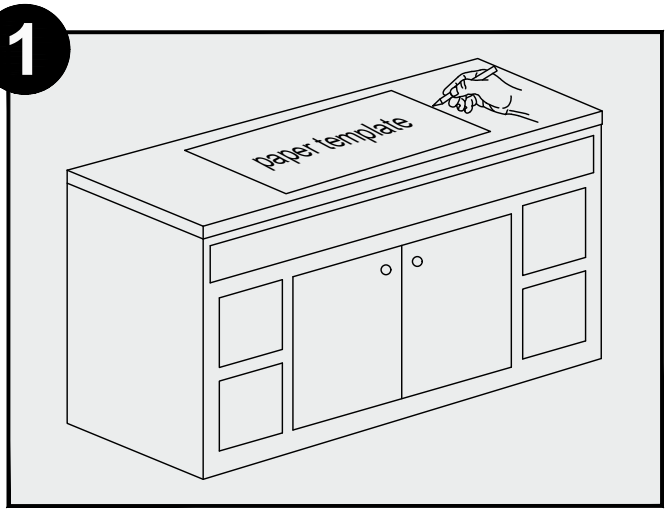

If a paper template has been provided, cut carefully along the dotted lines. Place the template on the countertop where you will be installing the sink. Note the location of the cabinet doors and panels to ensure that they are compatible with the sink installation. Fix the template to the counter using masking tape. Trace the template with a pencil. Remove the template from the countertop. If no template has been provided proceed to Step 2.

2

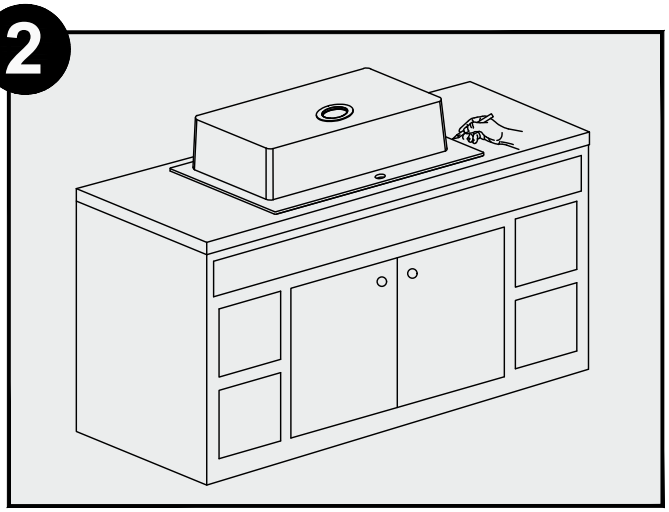

If no template is available, use the sink as your template. Place the sink upside down in the position where the sink is to be installed. Note the location of cabinet doors and panels to ensure that they are compatible with sink installation. Trace the outer edge of the sink with a pencil, then remove the sink. Measure 7mm in from the initial sink measurement and trace another line on the inside of the drawing. This second line will be the cutting line.

3

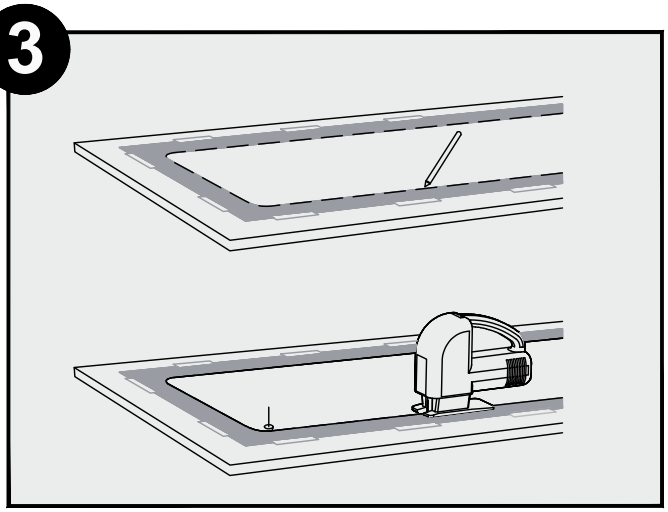

Using the drill, make a small starting hole of about 1/2” on the inside of the cutting line. Drill a second time in the same hole with a larger bit to enlarge the hole so that the saw can be inserted properly. Put masking tape on the outer side of the cutting line. This will protect the counter from scratches and shattered fragments caused by the saw. Using the appropriate saw that best fits your countertop material, trim the inside of the cutting line. Insert the sink and adjust the opening if necessary.

CAUTION - To avoid the risk of personal injury, wear safety glasses and cut resistant gloves with non-slip grip when cutting and drilling.

4

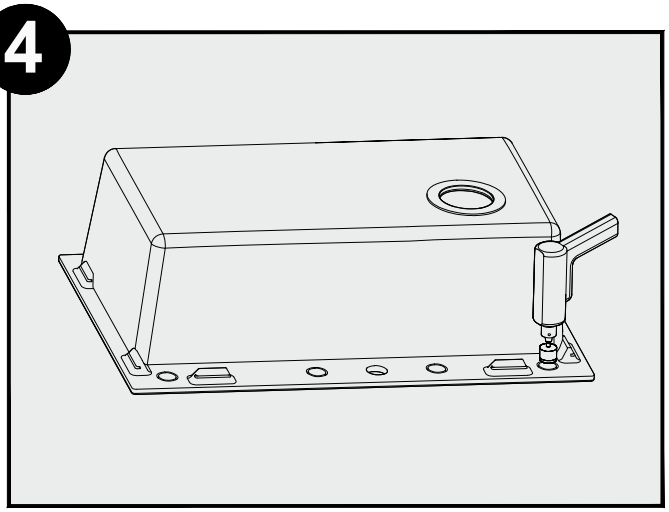

OPTIONAL

Your sink is pre-drilled with one faucet hole. Additional accessory holes may be added. Place the sink upside down on a suitable flat surface. Using the 35mm (1 3/8”) diamond-tipped hole saw at high power, drill through in the desired location.

CAUTION - This procedure will cause the metal saw to become very hot. Please handle with care.

CAUTION - To avoid the risk of personal injury, wear safety glasses and cut resistant gloves with non-slip grip when drilling.

5

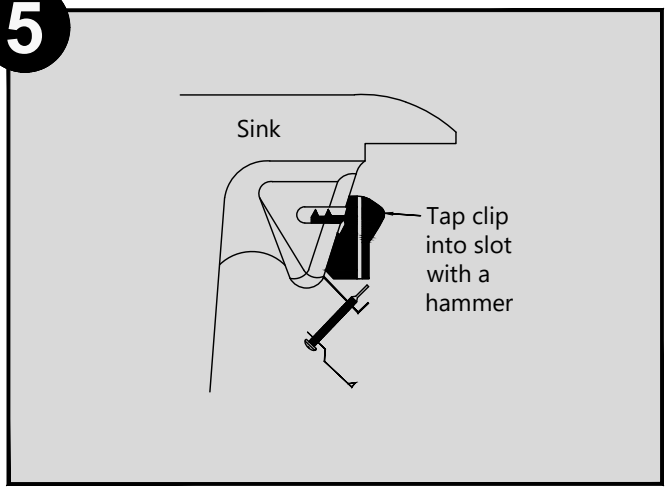

Attach the supplied clips to the anchor points on the underside of the sink rim.

6

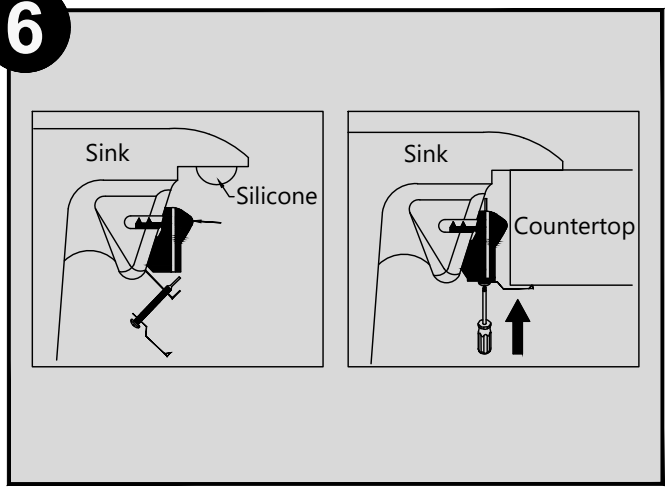

Clean and dry the surface around the opening of the sink. Verify that the sink fits correctly in the opening. The edge of the sink must sit on the counter.Turn the sink upside down to apply sealant. Apply silicone-based sealant (not included) underneath the edge of the sink rim. Insert the sink into the opening. Fix the sink to the counter by swiveling the mounting brackets up. Tighten the screws in the front of the sink, followed by the ones in the back and on the sides of the sink. Remove excess silicone-based sealant.

7

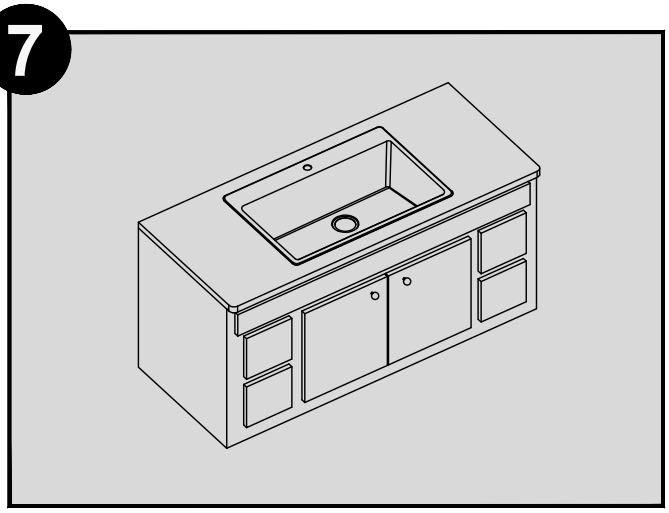

Install your faucet following the manufacturer's instructions.

Warranty

Products Subject to this Limited Warranty
This Limited Lifetime Warranty applies only to sinks manufactured and sold by Karran USA (the “Company”) (the “Products”).

Who is Entitled to this Limited Lifetime Warranty
The Company grants this Limited Lifetime Warranty solely in favor of the original purchaser of the Products (the “Original Purchaser”), but to no other person or entity whatsoever. No person or entity, other than the Original Purchaser, shall have any right to assert any claim under this Limited Lifetime Warranty, or otherwise, in connection with the Products. This Limited Lifetime Warranty is personal to the Original Purchaser and may not be transferred by the Original Purchaser to any other person or entity, by contract, operation of law, transfer of the property into which the Products are installed, or otherwise.

Commercial Warranty
The Company warrants its Products for a period of (1) year to commercial purchasers of Products used in industrial, commercial and business applications.

Length of this Limited Lifetime Warranty
This Limited Lifetime Warranty shall begin on the date the Products are purchased from an authorized Company dealer. The design and manufacture of the product are warranted to be free from defects in material and workmanship under normal usage for the lifetime of the product (such period of time, the “Warranty Period”), after which this Limited Warranty shall expire and be of no further force or effect. THIS LIMITED WARRANTY IS IN LIEU OF ALL OTHER WARRANTIES, EXPRESS OR IMPLIED, INCLUDING BUT NOT LIMITED TO THE IMPLIED WARRANTIES OF FITNESS FOR A PARTICULAR PURPOSE AND MERCHANTABILITY.

Please note that some states/provinces (including Quebec) do not allow limitations on how long an implied warranty lasts, so the below limitations may not apply to you. TO THE MAXIMUM EXTENT PERMITTED BY APPLICABLE LAW, ANY IMPLIED WARRANTY, INCLUDING THE IMPLIED WARRANTIES OF MERCHANTABILITY AND OF FITNESS FOR A PARTICULAR PURPOSE, IS LIMITED TO THE STATUTORY PERIOD OR THE DURATION OF THIS WARRANTY, WHICHEVER IS SHORTER.

What is Warranted
Subject to the conditions and limitations set forth in this Limited Lifetime Warranty, the Company warrants to the Original Purchaser that during the Warranty Period the Products will be free from manufacturing and design defects when used under normal conditions and maintained properly.

What the Company Will Do
In the event that any Product fails to comply with this Limited Lifetime Warranty, the Company will either repair or provide a replacement of the defective Product at its cost. The Company shall elect the remedy in its sole and absolute discretion.

In the event the Company elects to replace any defective Product, the Company may provide, at its option, up to $300 to be credited towards the installation of another Product. If the Company determines the Product needs to be undermounted with a silicone bond or soft seam in a solid surface or stone countertop, the replacement Product may, at the option of the Company, be another Product part of the Undermount Series. If the Product needs replacement by seamless integration (hard seamed) into a laminate, solid surface, granite or quartz countertop, the replacement Product shall be the Company's Top Mount Sink.

THE FOREGOING DESCRIBES THE COMPANY'S SOLE LIABILITY, AND THE ORIGINAL PURCHASER'S SOLE REMEDY, FOR ANY BREACH OF WARRANTY IN RESPECT OF THE PRODUCTS. THE COMPANY SHALL NOT BE LIABLE FOR, ANY SPECIAL, INCIDENTAL OR CONSEQUENTIAL DAMAGES (INCLUDING LABOR CHARGES TO REPAIR, REPLACE, INSTALL OR REMOVE THIS PRODUCT), WHETHER ARISING OUT OF BREACH OF ANY EXPRESS OR IMPLIED WARRANTY, BREACH OF CONTRACT, TORT, OR OTHERWISE.

How to Make a Claim
To make a claim under this Limited Lifetime Warranty, the Original Purchaser must notify the Company in writing or by phone of any claimed defect in a Product. Such notice must be given promptly following discovery of the claimed defect and in any event prior to the expiration of the applicable Warranty Period. The Original Purchaser must submit with such notice proof of purchase and proof of the date of purchase of the Product claimed to be defective. Notification shall be provided to:

USPS
Karran USA
Attention: CLAIMS
PO Box 667
Vincennes, IN 47591

Email: warranty@karran.com
Phone: 866-452-7726

The Company shall then promptly inspect, by means of digital photography or video supplied by the customer, the claimed defect and if such examination does disclose a defect covered by this warranty, shall, within thirty (30) days after inspection replace or repair the defective Product (as it shall elect in its sole and absolute discretion), subject to the terms set forth above.

Limitations
1. The Company shall not be liable under this Limited Lifetime Warranty for any of the following:

A. Defects in or failure of the Products caused by accidents, physical abuse or misuse of the Products.

B. Defects in or failure of the Products caused by installation of the Products not in strict adherence with the written instructions of the Company.

C. Defects in or failure of the Products caused by improper care or maintenance of the Products including the use of abrasive cleaners such as powders, ammonia, alcohol or chlorine or the use of abrasive pads, steel wool or wire brushes.

D. Breakage of the Product that is not due to a defect in the manufacture of the Products.

E. Any damage to the Products caused by impact of foreign objects, earthquake, or other acts of God or by fire, explosion or other casualty.

F. Defects in, failure of, or damage to the Products caused by materials adjacent to the Products.

G. Any damage due to or resulting from heat.

H. Damage to the Products caused by alteration after completion of their installation by anyone who is not authorized by the Company in writing, whether such alteration be by structural additions, changes, replacements or by equipment installation.

I. Changes in the Products due to gloss reduction, scratching, staining or alkaline etching of the finish over time due to use, cleaning practices or water conditions, all of which are not manufacturing defects but are indicative of normal wear and tear.

J. This warranty does not cover Products that were discontinued when purchased or display Products, whether such Products were purchased at discount outlets, unauthorized dealers, and/or sold on clearance. This warranty does not cover any free gifts included with purchase.

2. IN NO EVENT SHALL THE COMPANY BE LIABLE FOR CONSEQUENTIAL OR INCIDENTAL DAMAGES OF ANY KIND, INCLUDING, BUT NOT LIMITED TO, ANY DAMAGE TO THE PROPERTY IN WHICH A PRODUCT IS INSTALLED, ITS CONTENTS OR ANY PERSON THEREIN. NO FIELD REPRESENTATIVE, DISTRIBUTOR OR DEALER OF THE COMPANY IS AUTHORIZED TO MAKE ANY CHANGE OR MODIFICATION TO THIS LIMITED WARRANTY. SOME STATES/PROVINCES (INCLUDING QUEBEC) MAY NOT ALLOW LIMITATIONS ON OR THE EXCLUSION OF INCIDENTAL OR CONSEQUENTIAL DAMAGES, SO THE ABOVE EXCLUSIONS MAY NOT APPLY TO YOU.

The invalidity, illegality or unenforceability of any one or more provisions of this Limited Warranty shall in no way affect or impair the validity, legality or enforceability of the remaining provisions, which shall remain in full force and effect.

Legal Remedies
This warranty gives you specific legal rights, and you may also have other rights which vary from state to state and province to province. 04-1-24