Assembly Instructions
LL-AT5DD

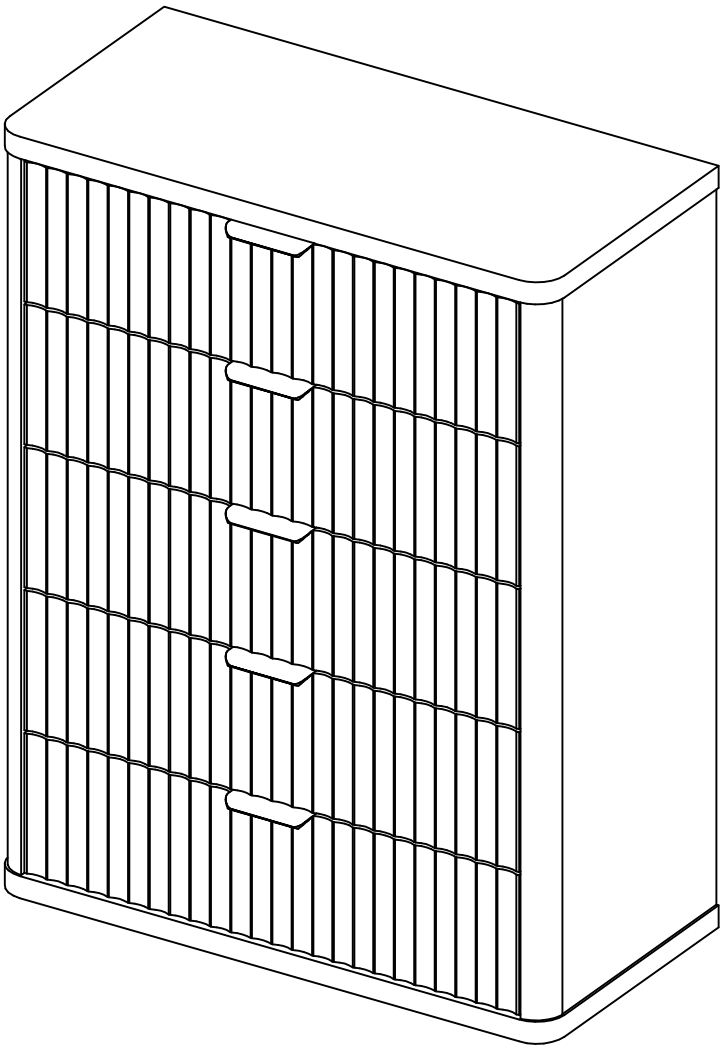

BEFORE STARTING

Before Using Product

Read each step carefully before starting.It is very important thateach step is performed in the correct order.If these steps are not followed in sequence,assembly difficulties will occur.

Make sure all parts are included.

Work in a spacious area and near where the unit will be used,preferably on a carpet,or use a piece of the cardboard packaging to protect your floor and product.

For a smooth assembly process,we suggest you keep a lite tightness for all the screws during assembly.After the whole product is assembled, firmly tighten all the screws.

⚠ WARNING

Do not allow children to climb on unit.

Avoid sharp objects or corrosive chemicals to prevent damage to the product.

During assembly,keep parts and packaging materials away from children and pets as there could be potential injury and choking hazards.

Please make sure that all objects are removed before moving the assembled unit.

The unit must be team lifted,not dragged or pushed.Failure to do so could cause instability,product collapse,and/or serious injury.

Be careful when using power tools to assemble your furniture.

Power tools may strip or damage the parts.

PART LIST

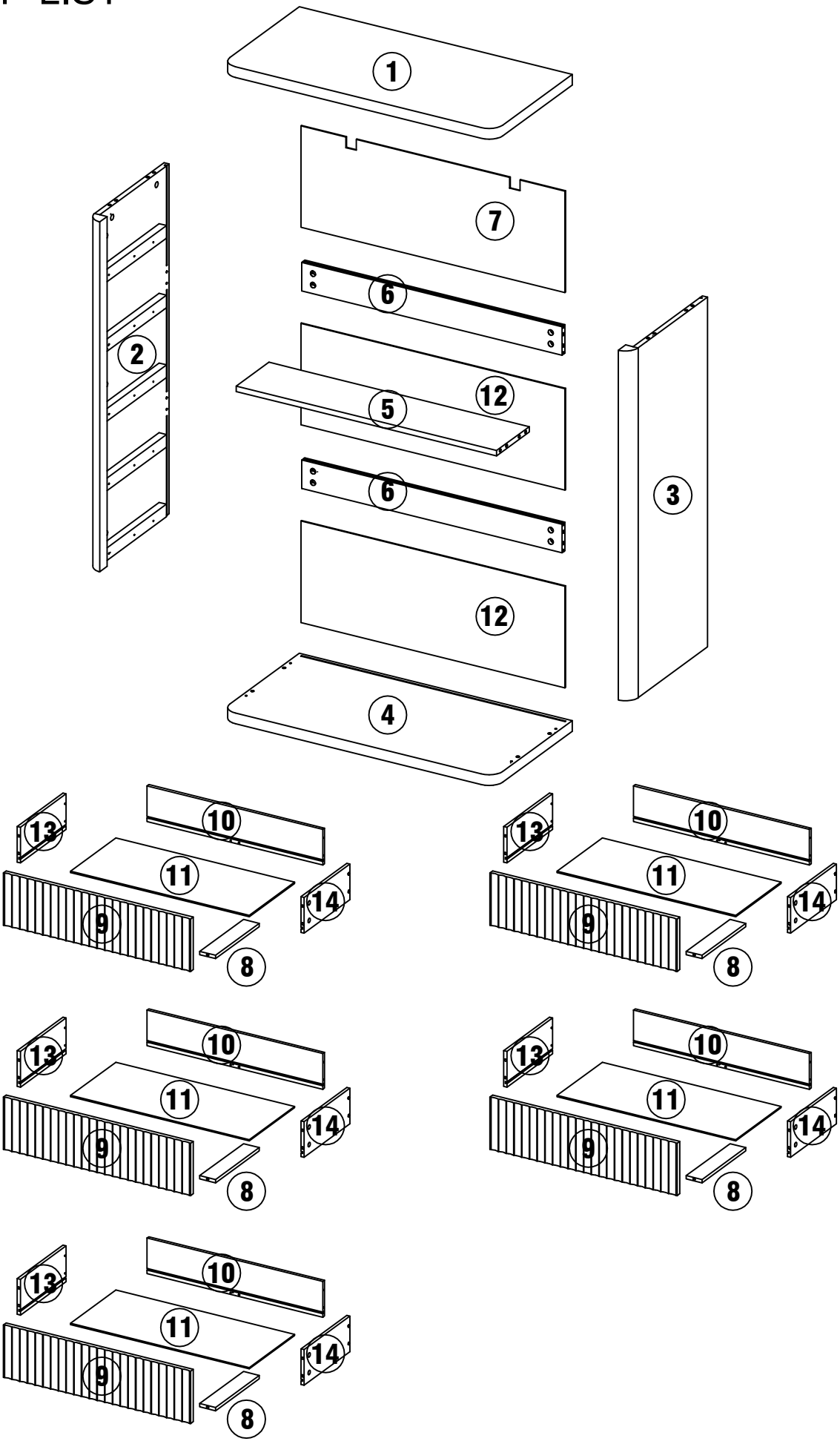
1
7
6
2
12
5
6
3
12
4
13
10
11
14
9
8
13
10
11
14
9
8
13
10
11
14
9
8
13
10
11
14
9
8
13
10
11
14
9
8

PART LIST

1 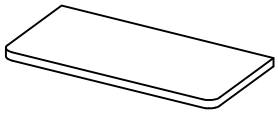 1 pc	2 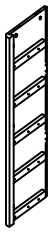 1 pc	3  1 pc
4  1 pc	5  1 pc	6  2 pcs
7 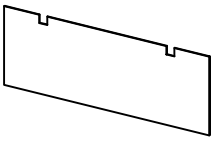 1 pc	8 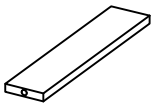 5 pcs	9 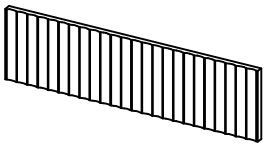 5 pcs
10 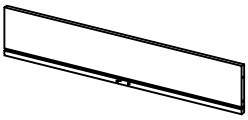 5 pcs	11 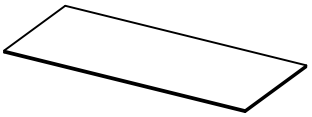 5 pcs	12 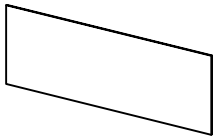 2 pcs
13 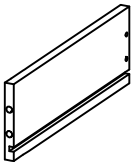 5 pcs	14 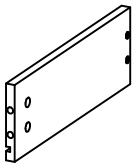 5 pcs	

HARDWARE LIST

A X12+1  **∅8X30MM**	**B X41+2** 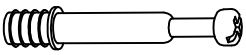 **∅6X40MM**	**C X41+2**  **∅15X10MM**
D X60+2 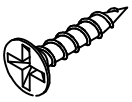 **∅3X11MM**	**E X4** 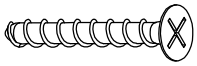 **∅4X50MM**	**F X5** 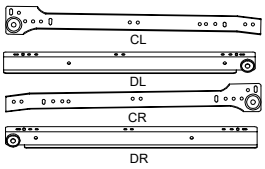
G X30+2 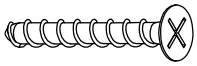 **∅4X35MM**	**H X13** 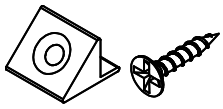	**I X5** 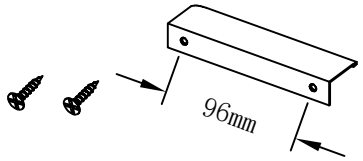
J X2 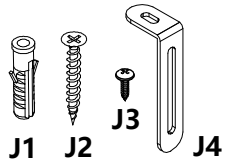 	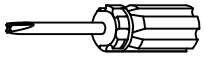	

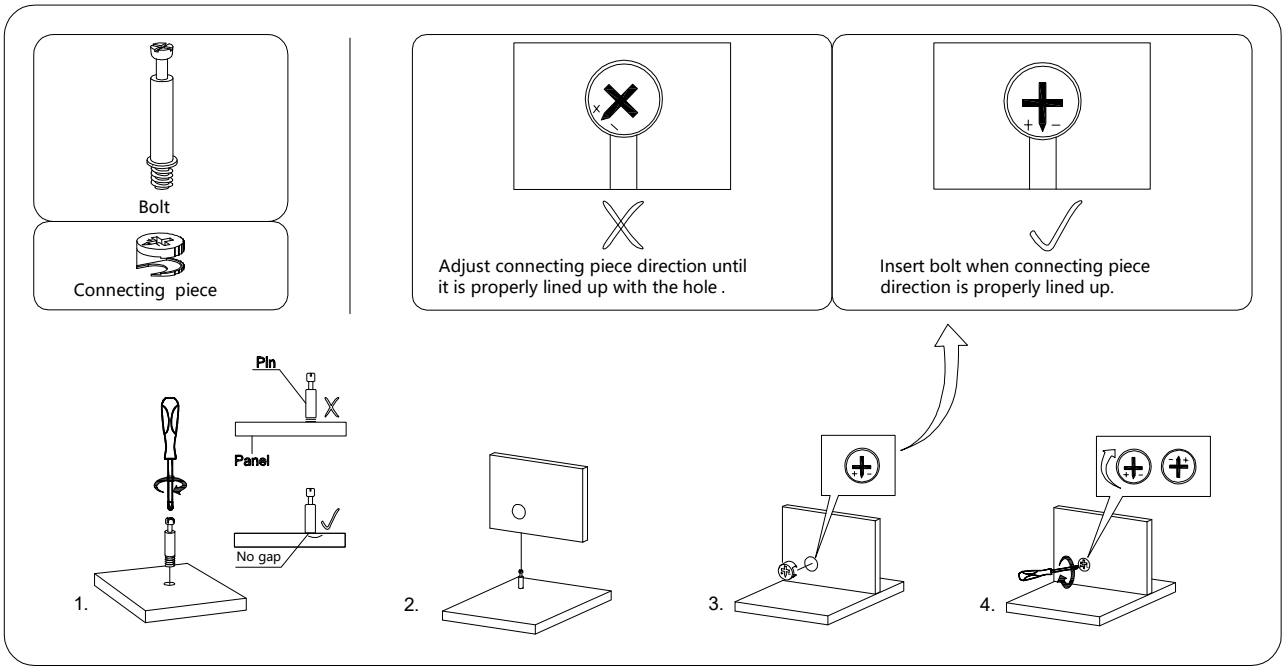

STEP 1

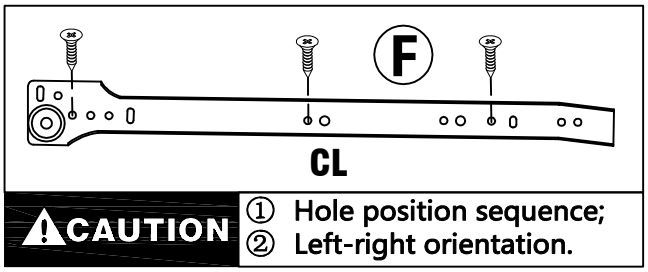

CAUTION

① Hole position sequence;
② Left-right orientation.

B		X6
D		X15
F		X5

STEP 2

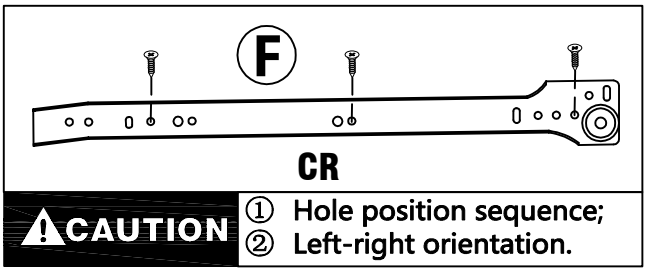

CAUTION

① Hole position sequence;
② Left-right orientation.

B		X6
D		X15
F		X5

STEP 3

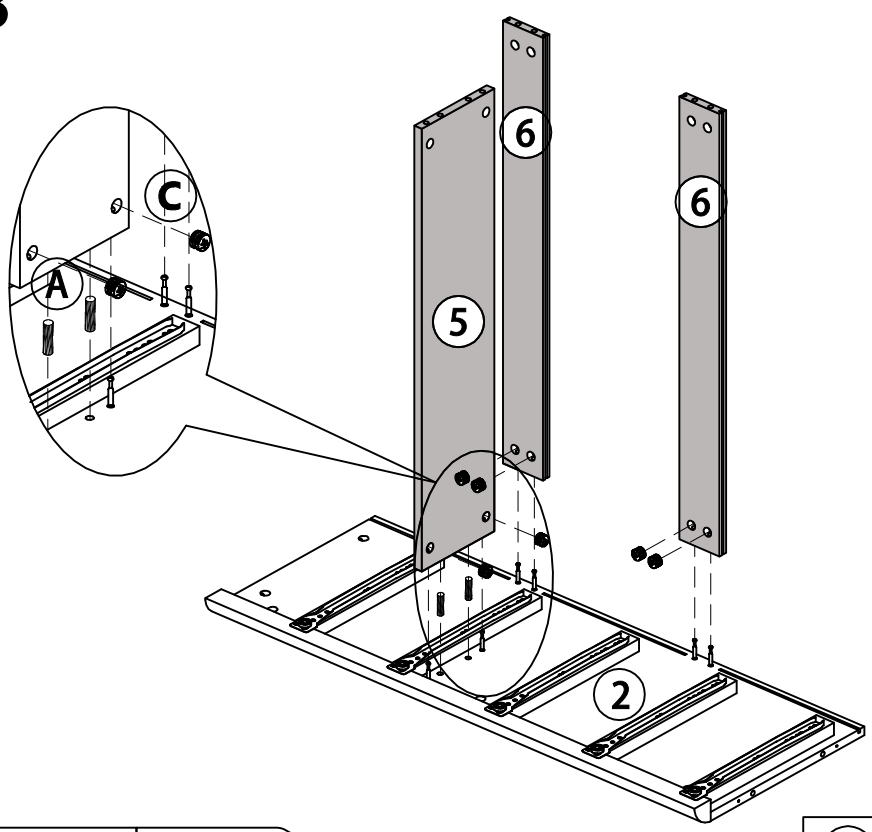

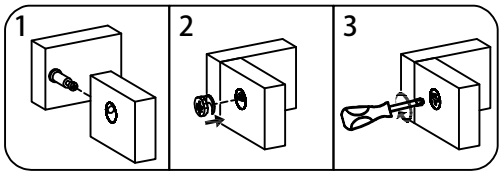

A		X2
C		X6

STEP 4

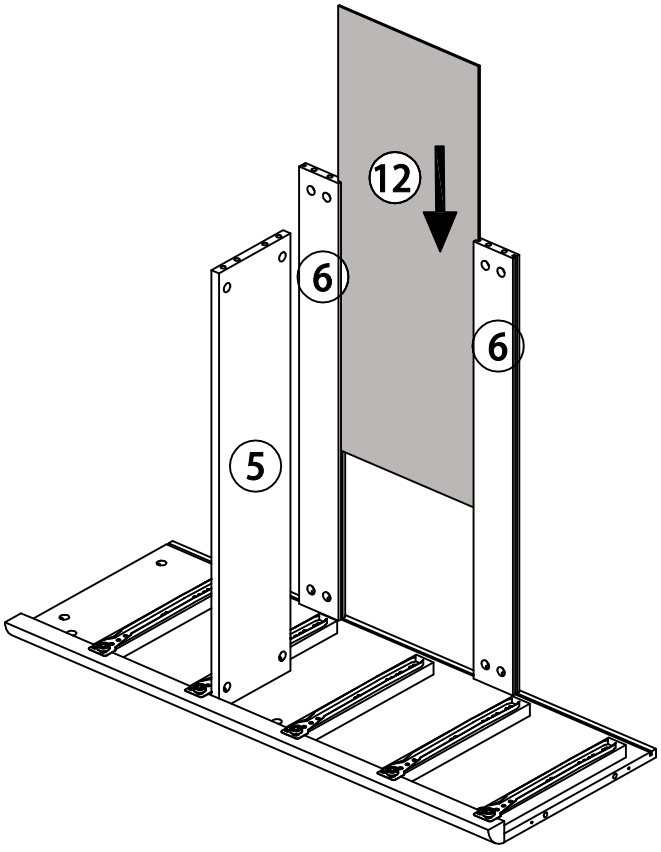

STEP 5

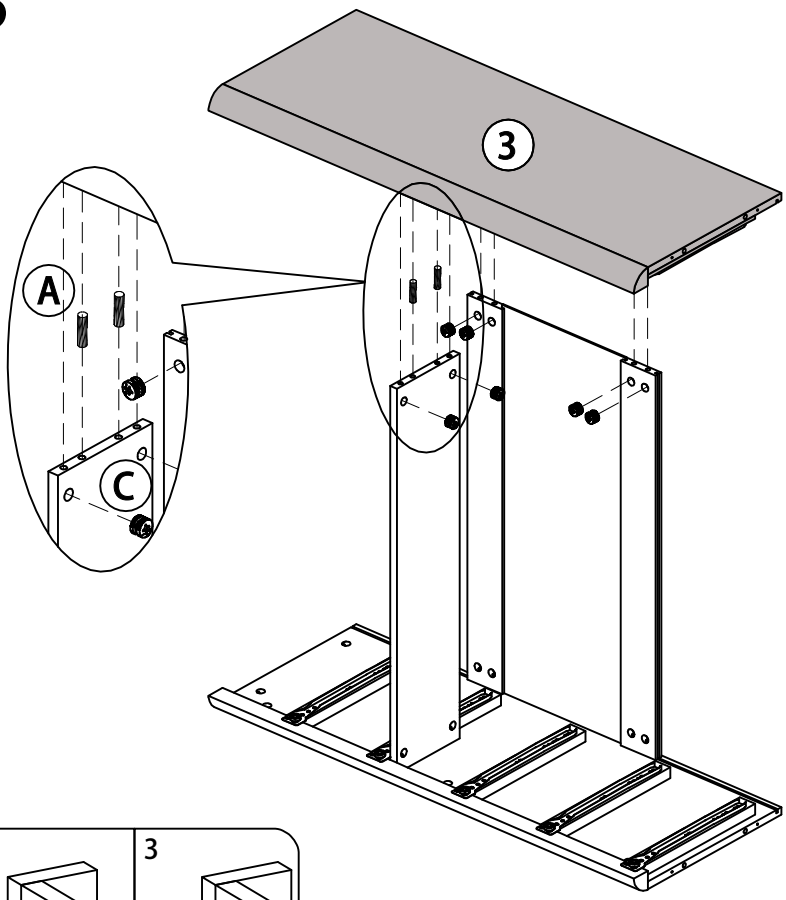

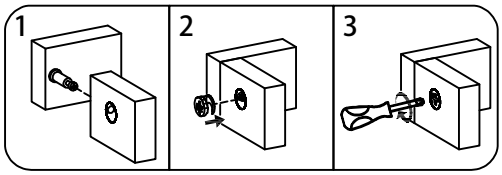

A		X2
C		X6

STEP 6

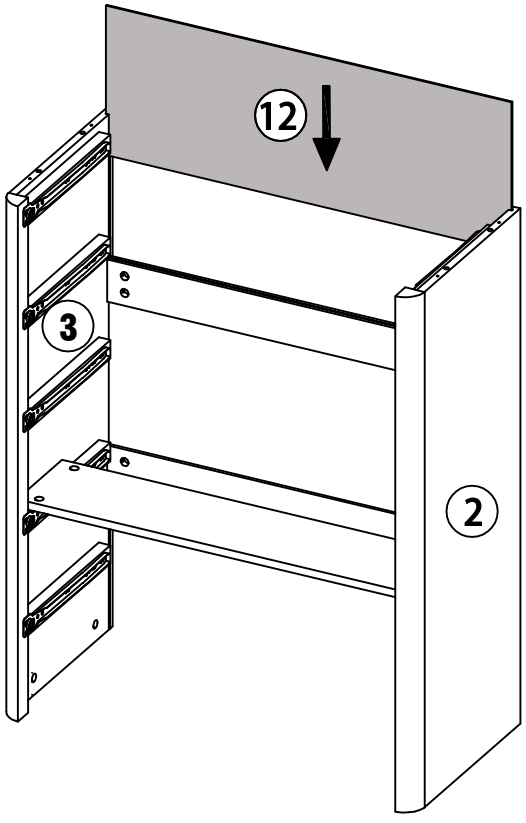

STEP 7

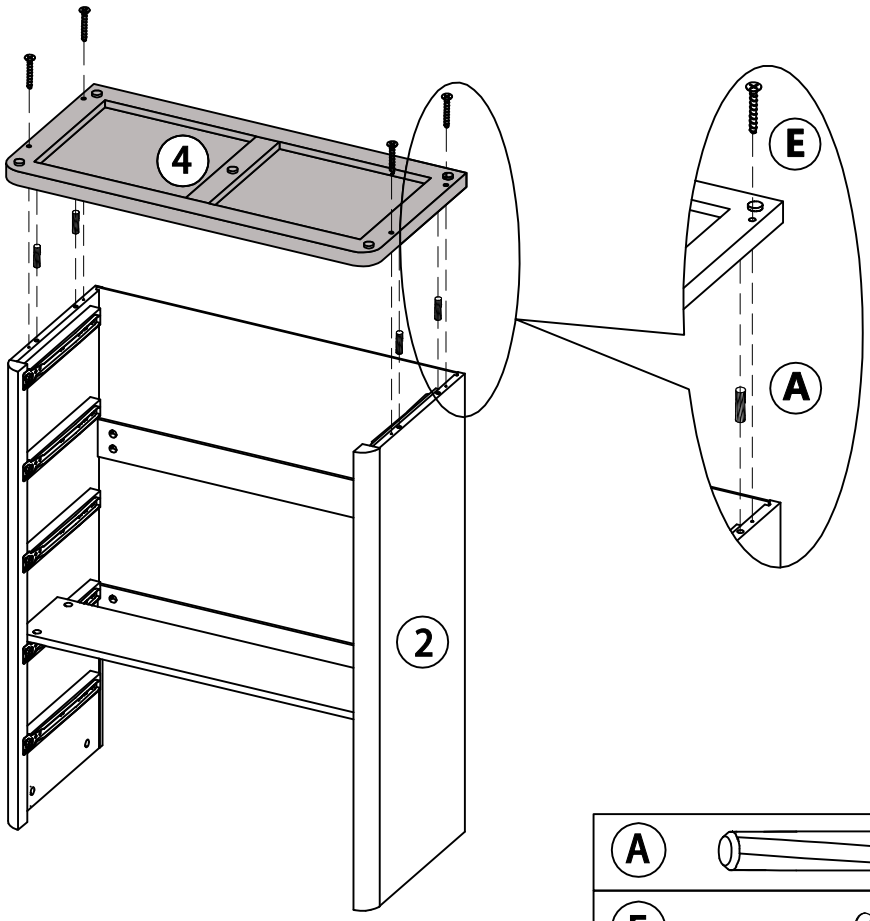

A		X4
E		X4

STEP 8

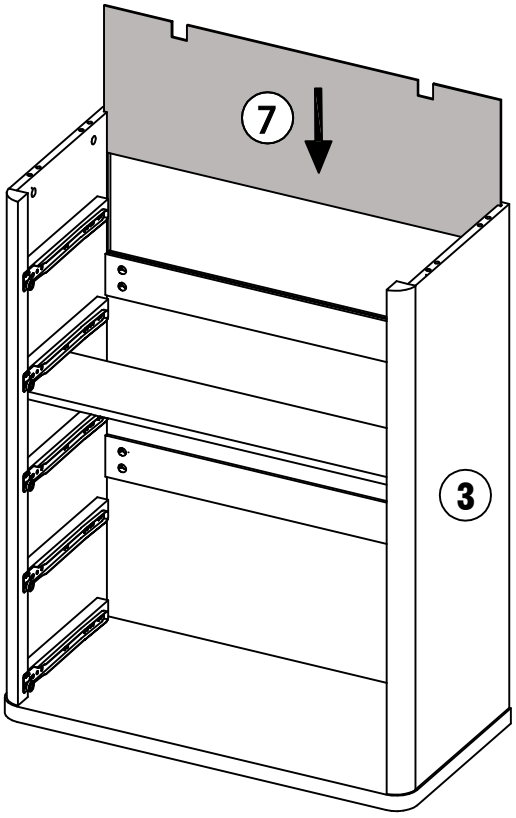

STEP 9

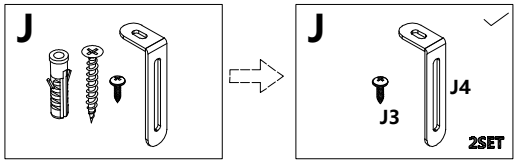

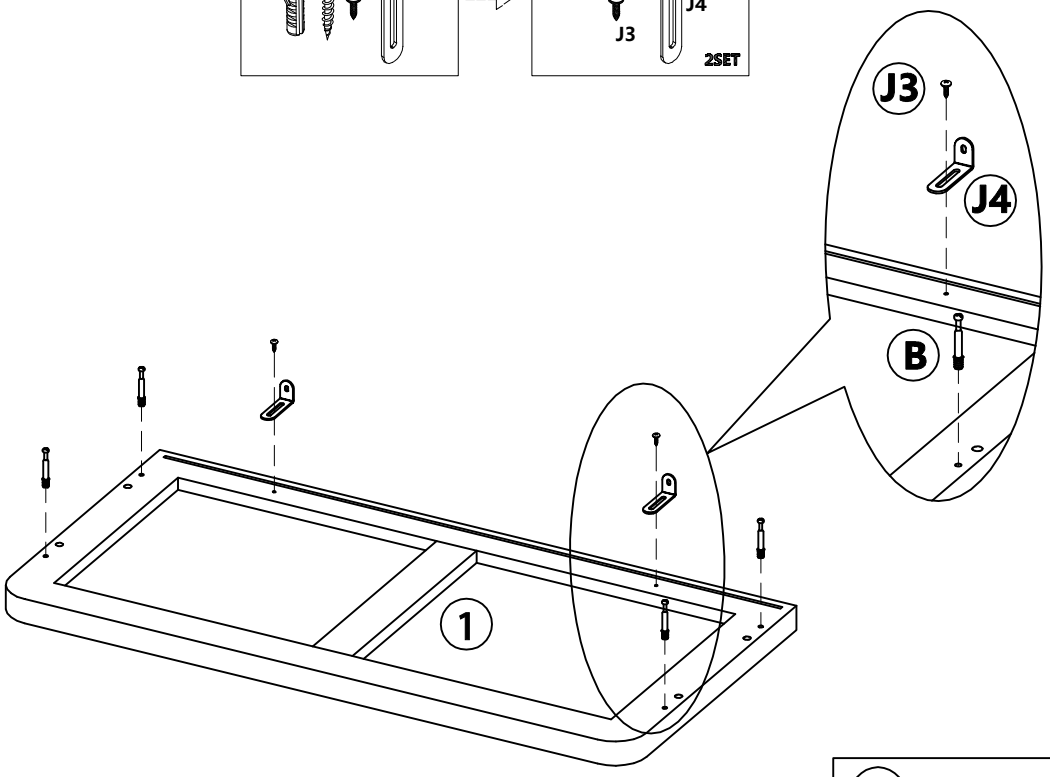

B		X4
J	J1 J2 J3 J4	X2

STEP 10

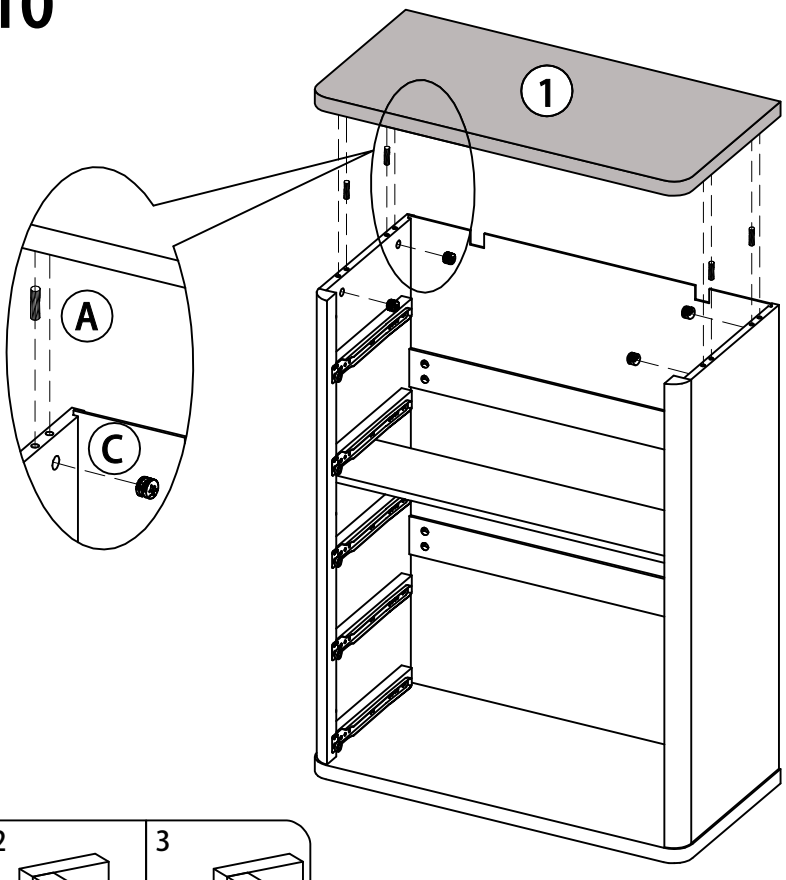

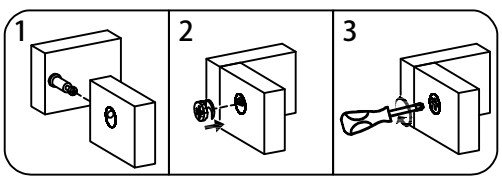

A		X4
C		X4

STEP 11

Please be sure to install the mending wedges to prevent the product from becoming unstable or wobbling.

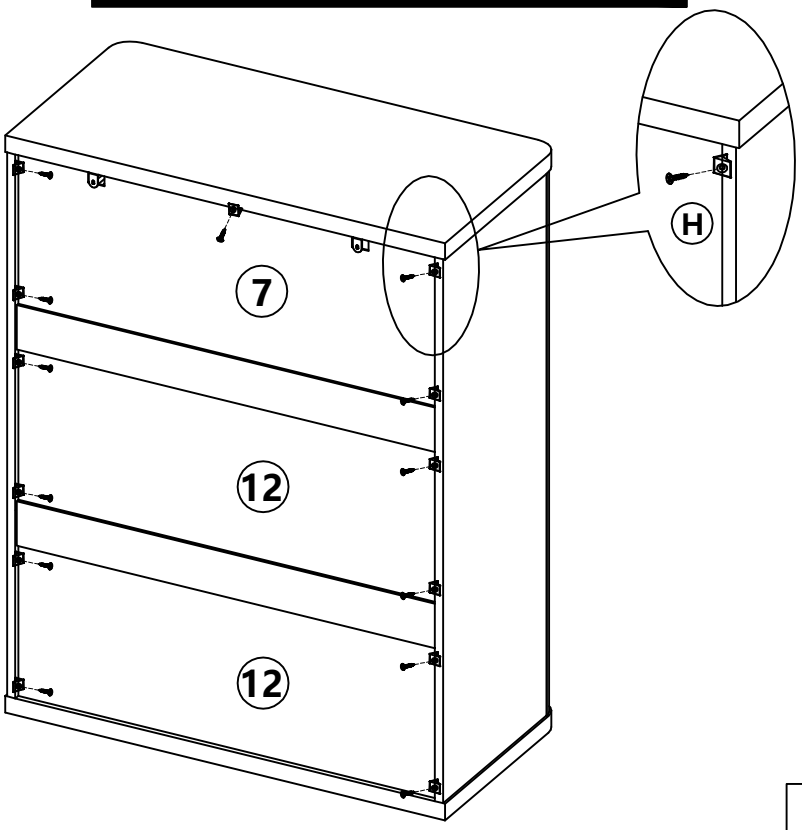

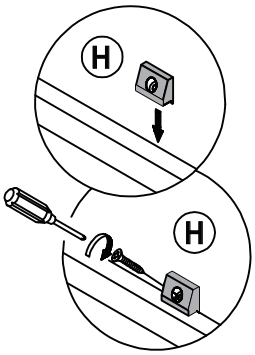

Install and tighten backplate screws to ensure stability

H		X13

STEP 12

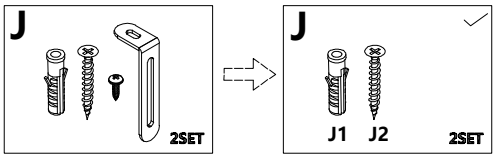

Drill a hole in the wall , then hammer the J1 into the wall with a hammer

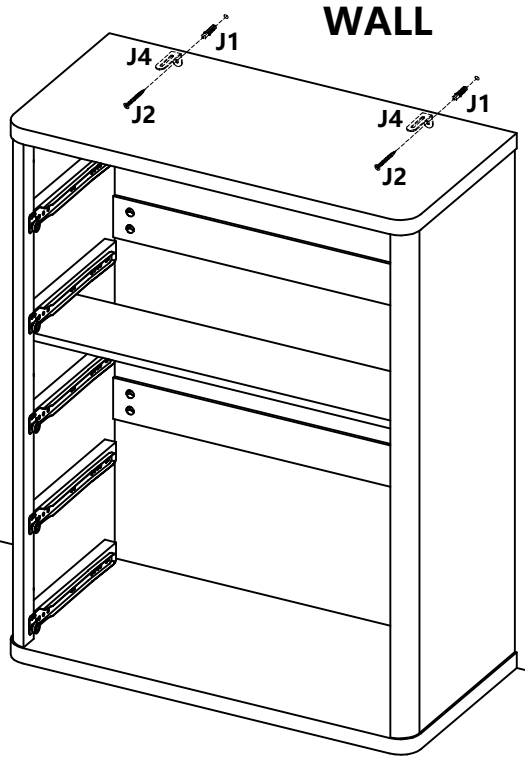

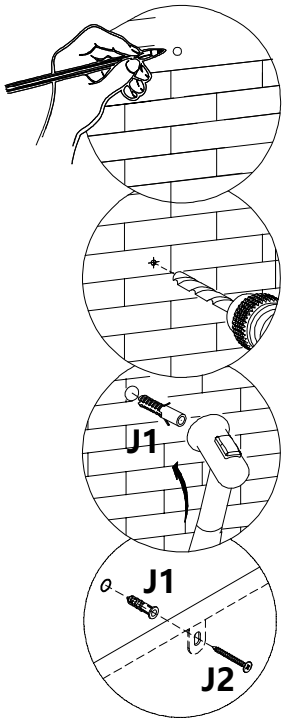

J	J1	J2	J3	J4	X2

STEP 13

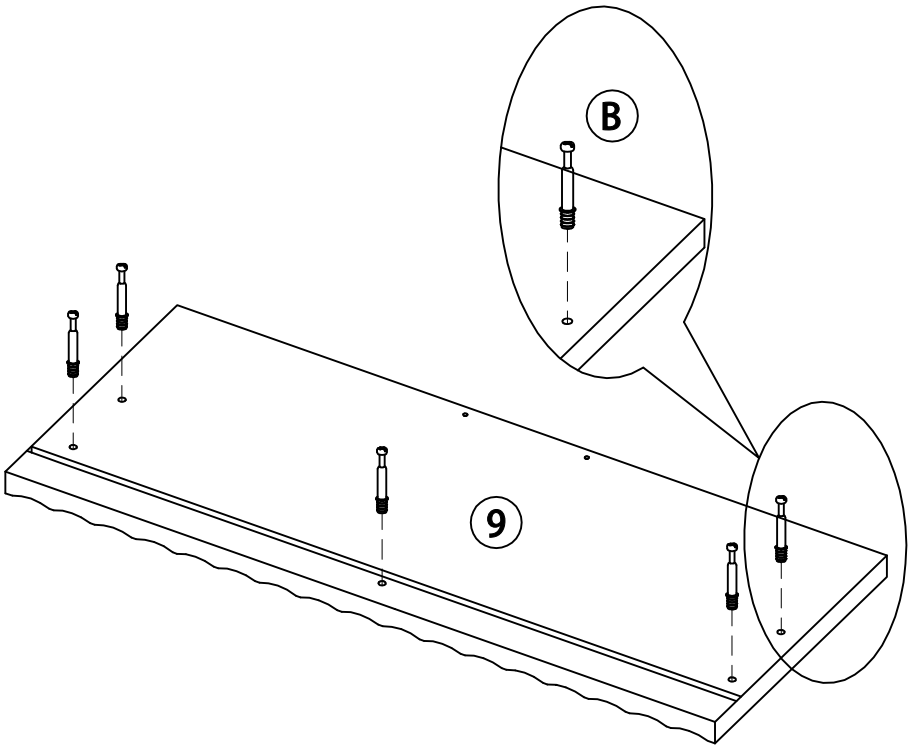

X5

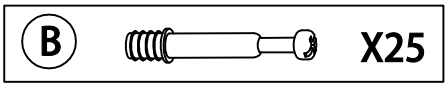

STEP 14

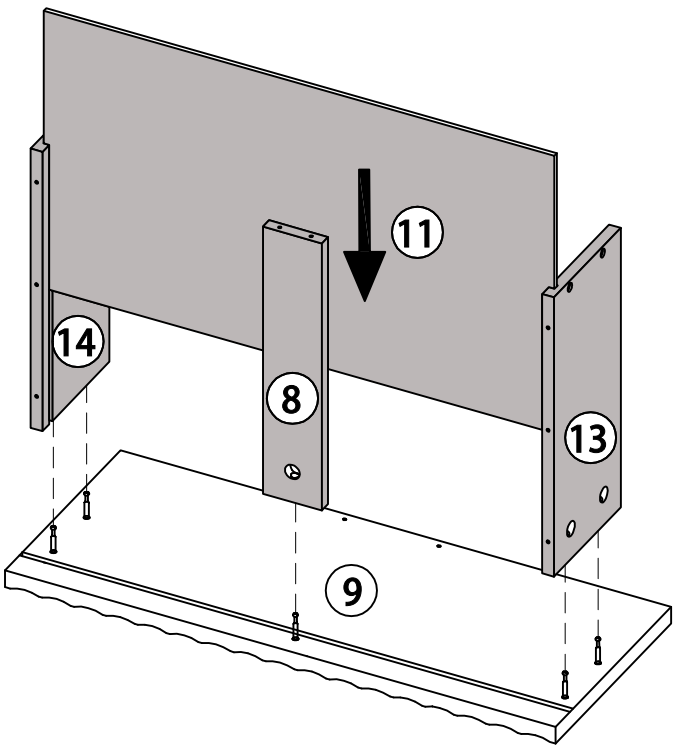

X5

STEP 15

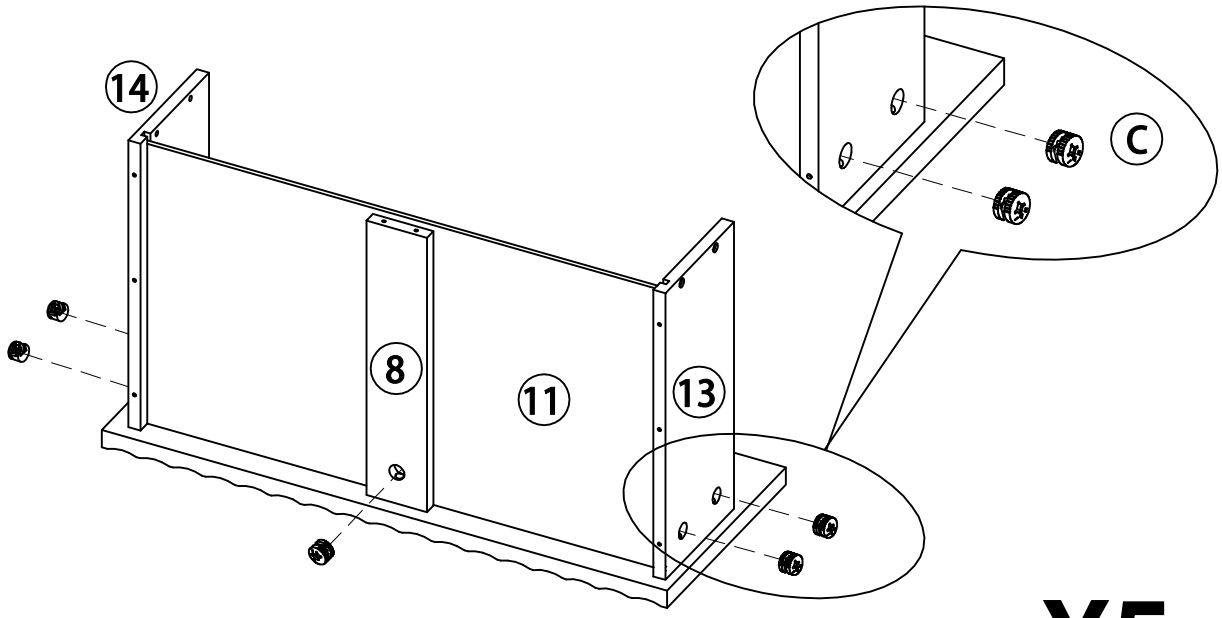

X5

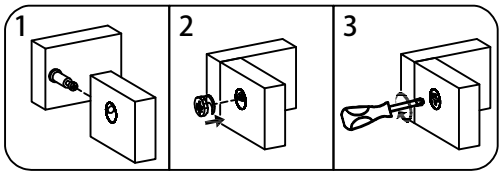

C		X25

STEP 16

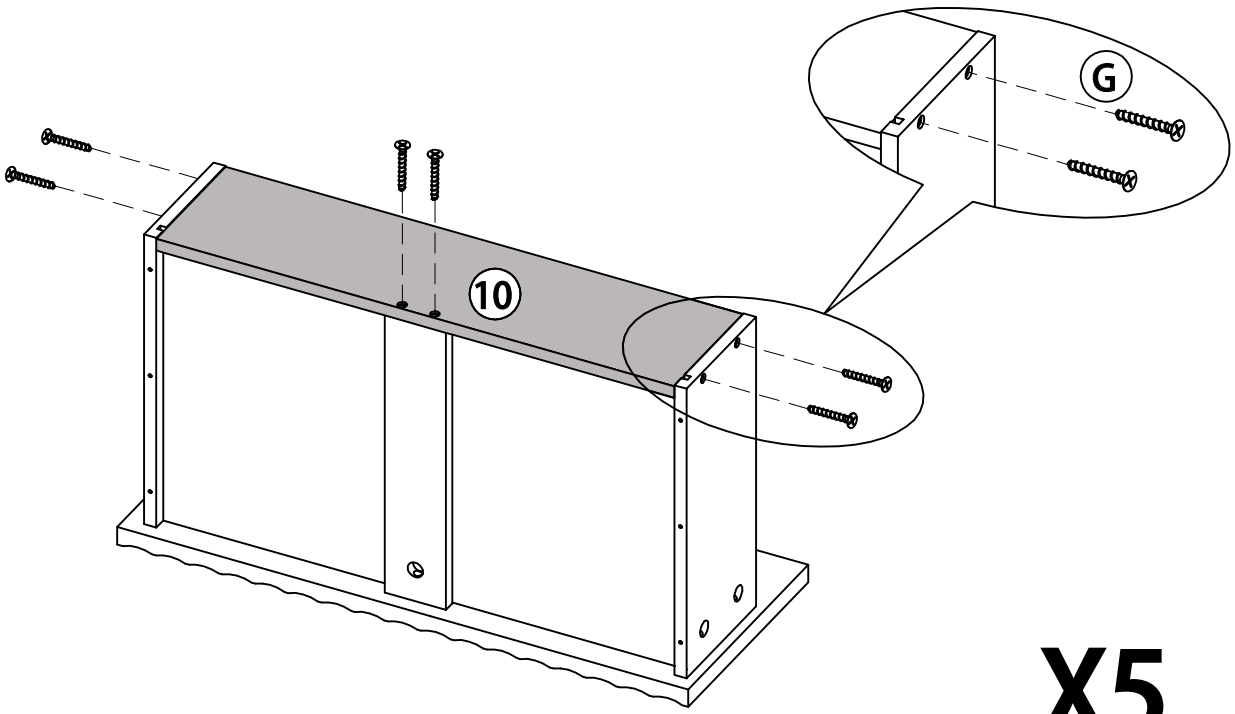

X5

G		X30

STEP 17

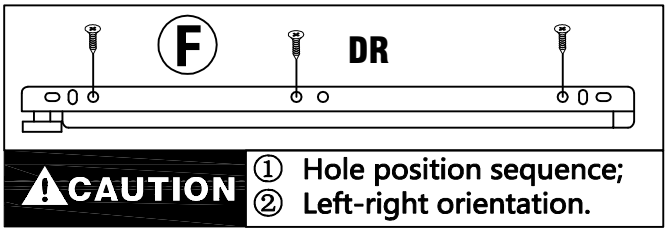

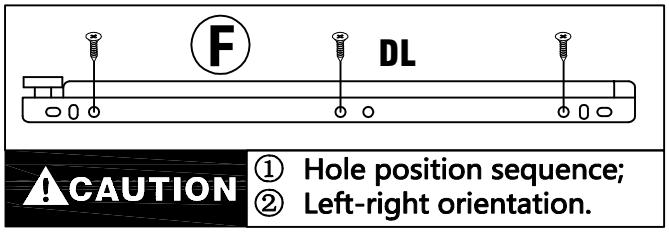

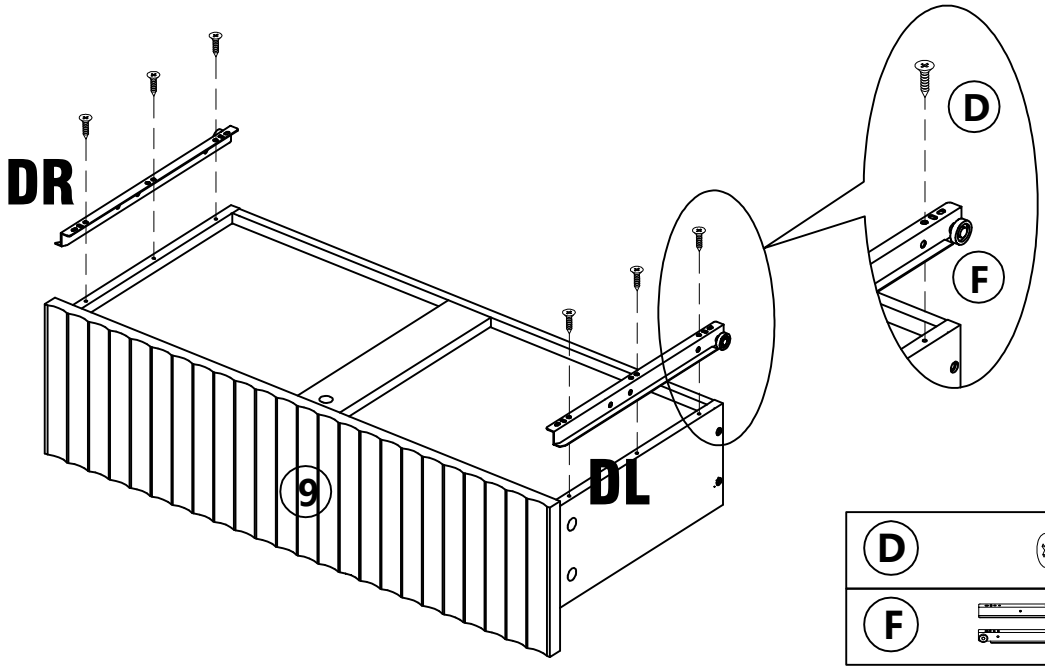

X5

D		X30
F	DL / DR	X5

STEP 18

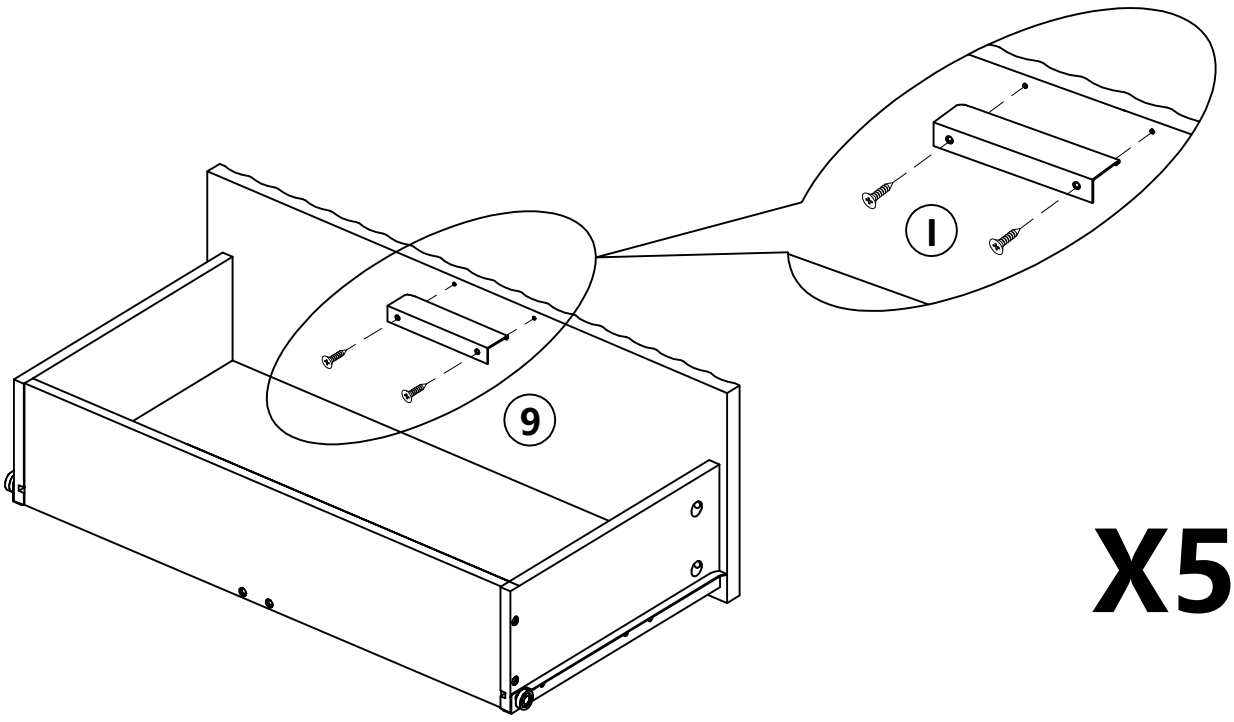

X5

I		X5

STEP 19

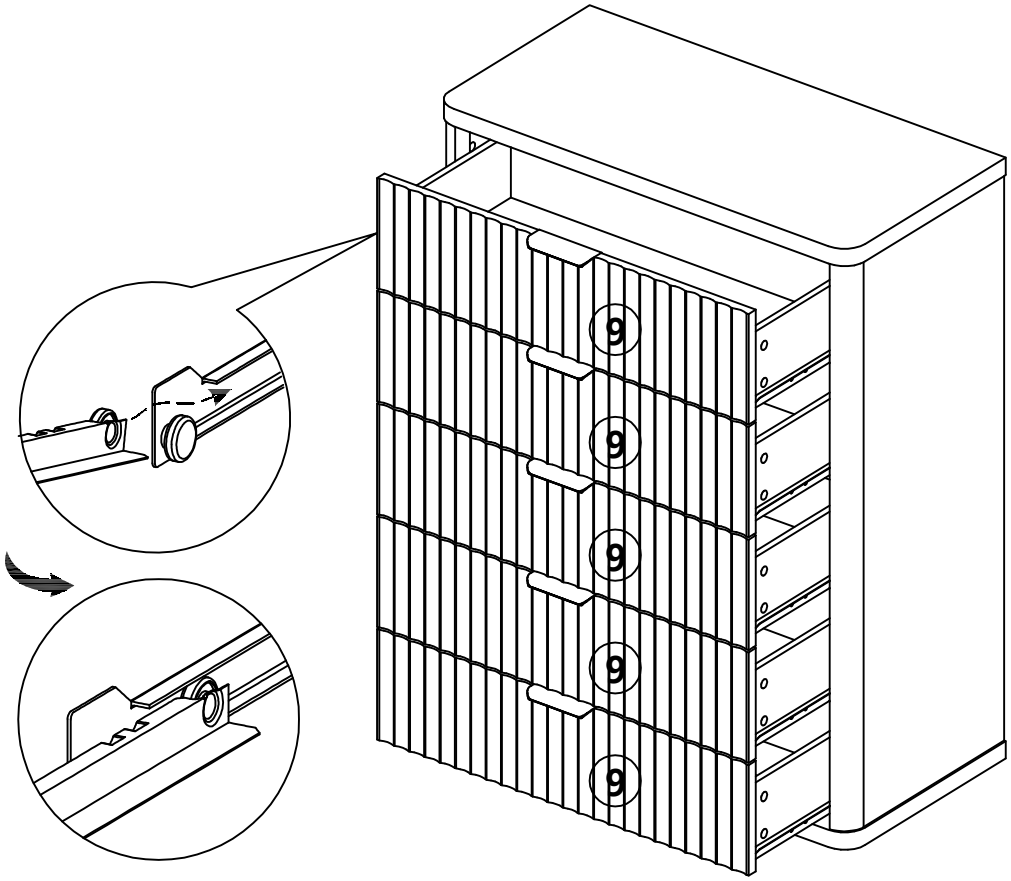

⚠ WARNING





Children have died from furniture tipover. To reduce the risk of furniture tipover:

- ALWAYS install anti-tip device provided.
- NEVER put a TV on this product.
- NEVER allow children to stand, climb or hang on any drawers, doors, or shelves.
- NEVER open more than one drawer at a time.
- Place heaviest items in the lowest drawers.

his is a permanent label.
Do not remove!