ASSEMBLY INSTRUCTION

If there are any questions during the assembly process, please contact us.
A video and description about the step you were stucked will help us to understand the problem quickly.

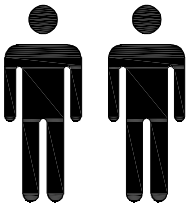

2 person required to
assemble this product

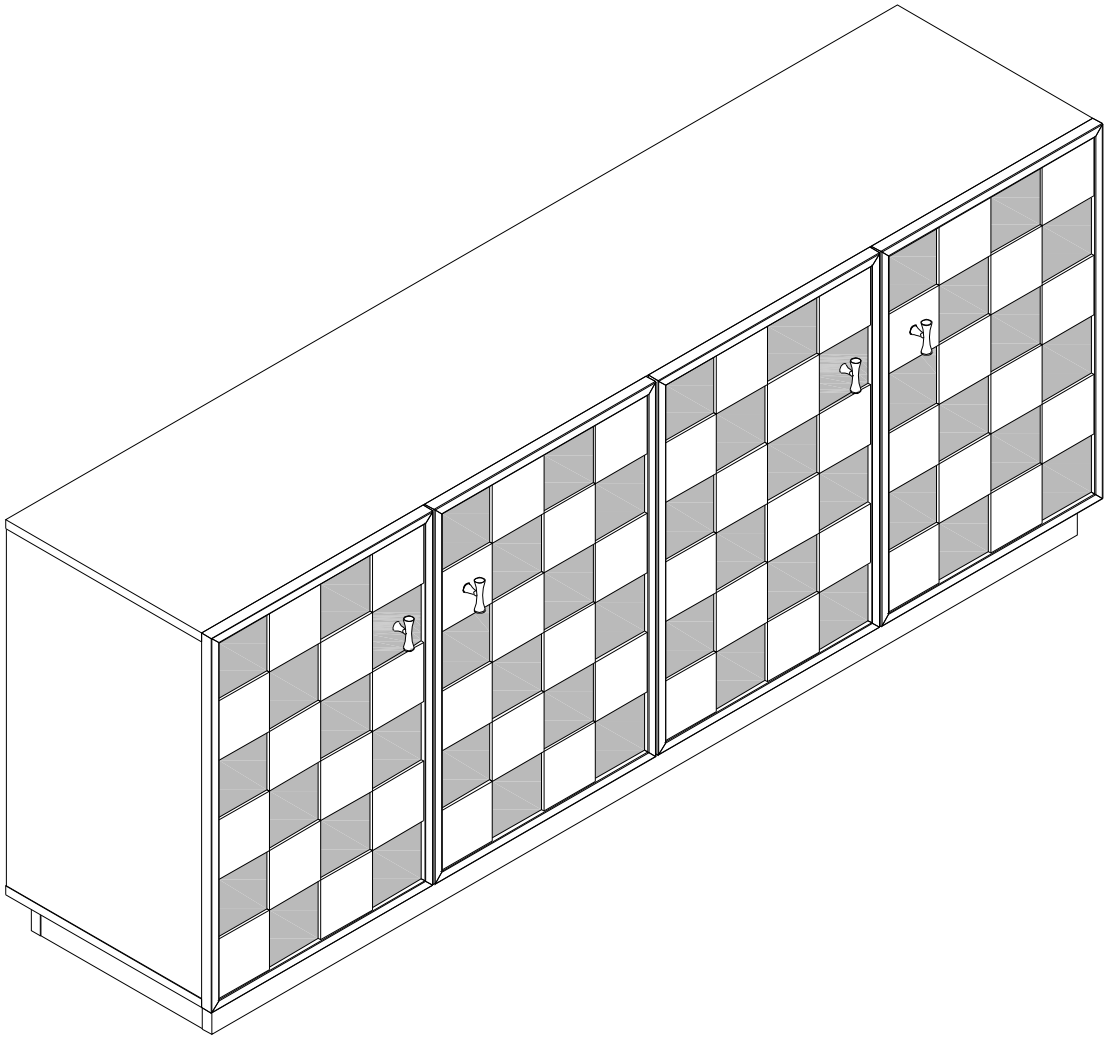

ASSEMBLY INSTRUCTION

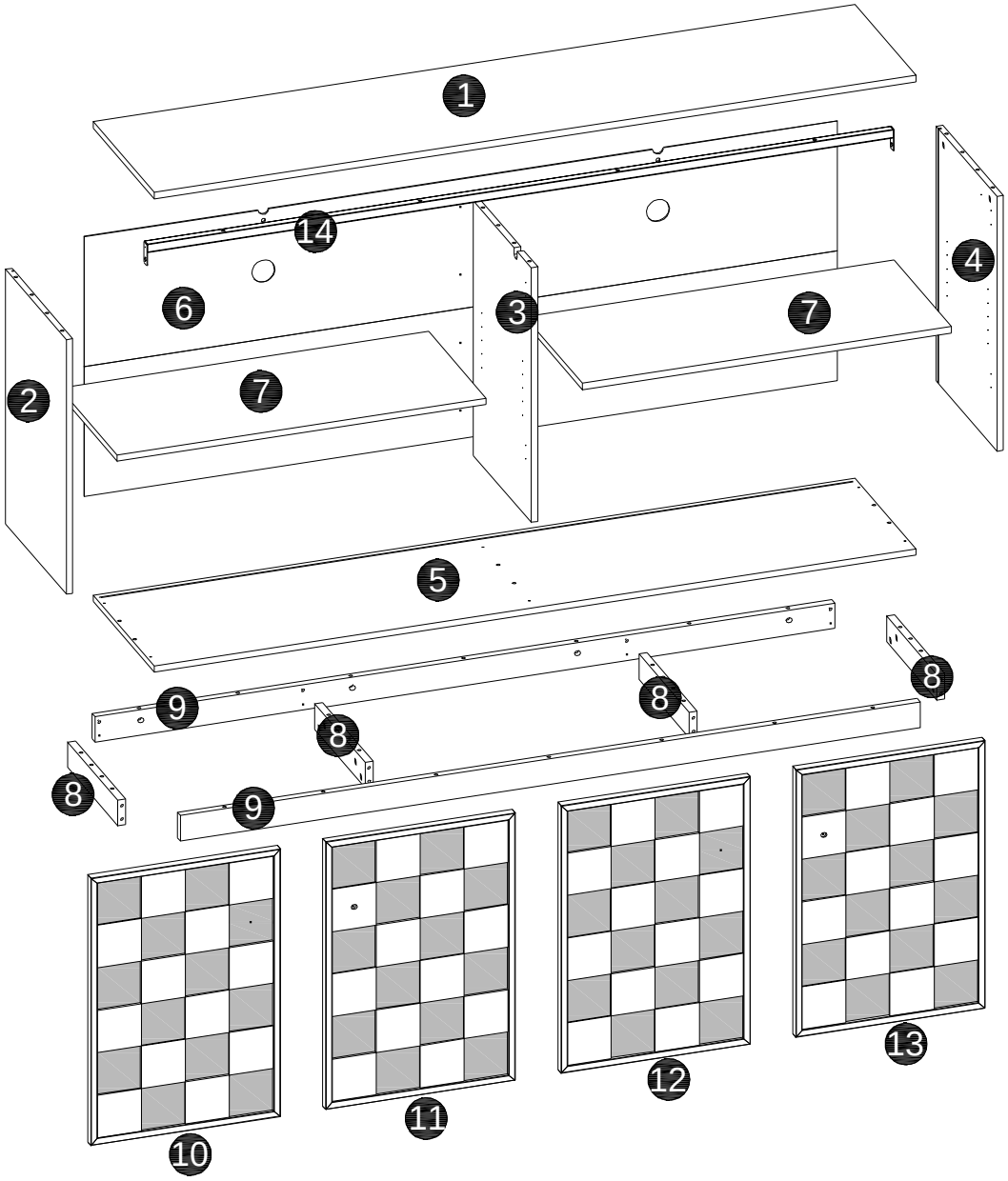

A x30	B x30	C x34	D x6	E x8	F x16	G x4	H x4	I x4
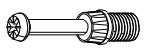			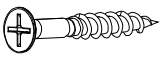	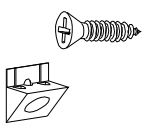			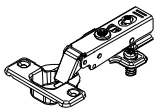	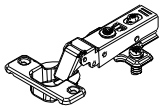
M6x35mm	ϕ15mm	ϕ8x30mm	M5x38mm		M3.5x16mm	M4x16mm		

J x4	K x2	L x2	M x8	N x4	O x8	P x2	Q x2	R x8
		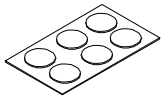	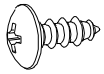	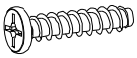	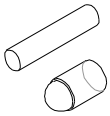	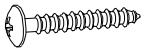	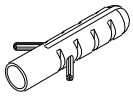	
	M6x12mm	ϕ25	M3.5x14mm	M6x28mm		M5x38mm		

S x2
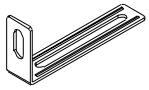

1

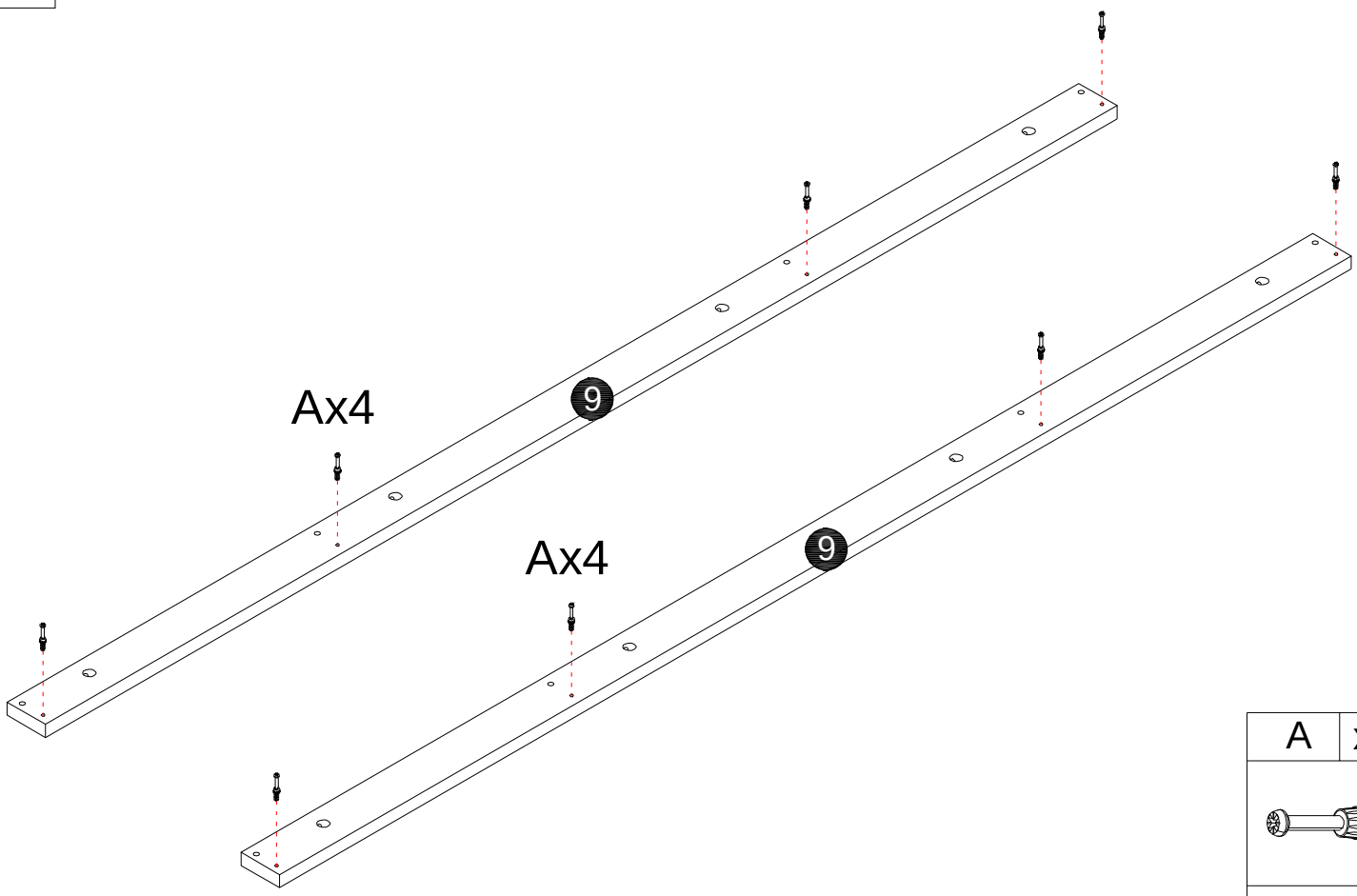

A	x8
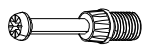	
M6x35mm	

2

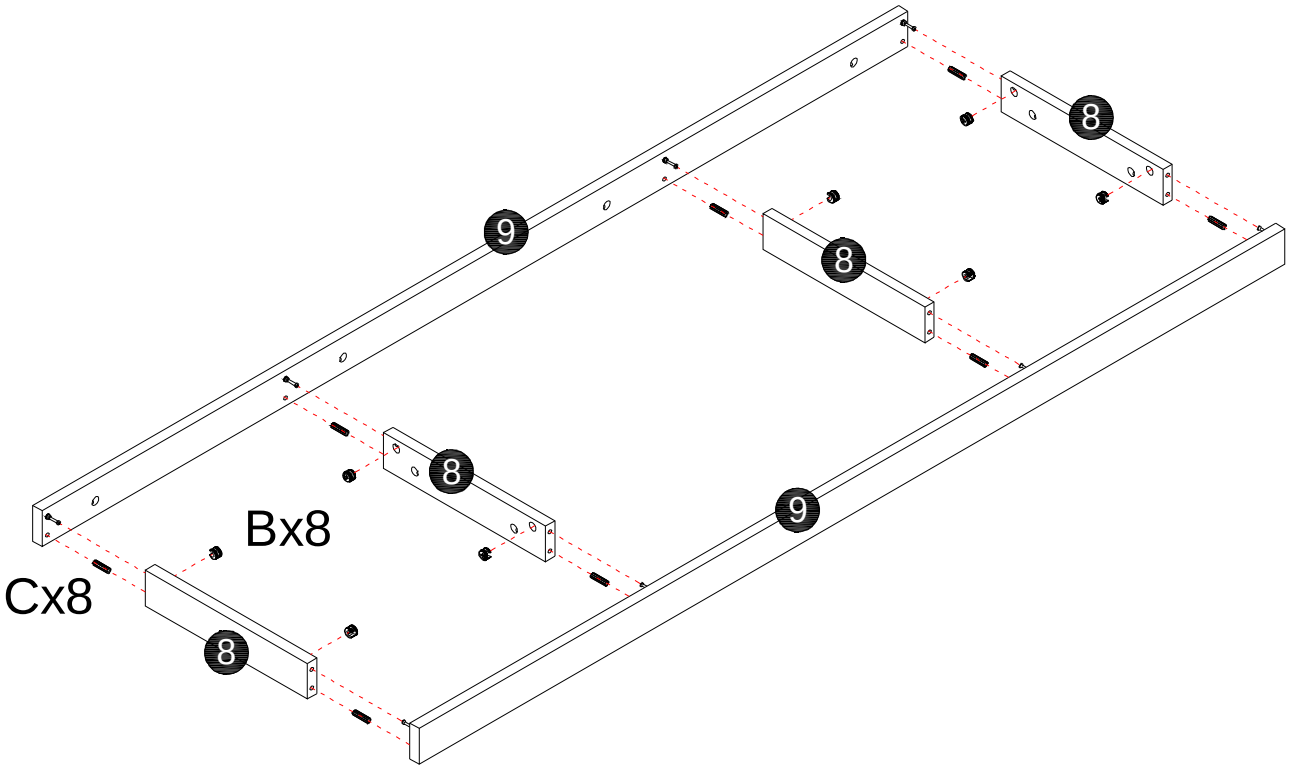

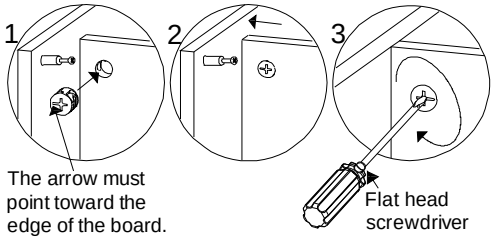

B	x8	C	x8
ϕ15mm		ϕ8x30mm	

3

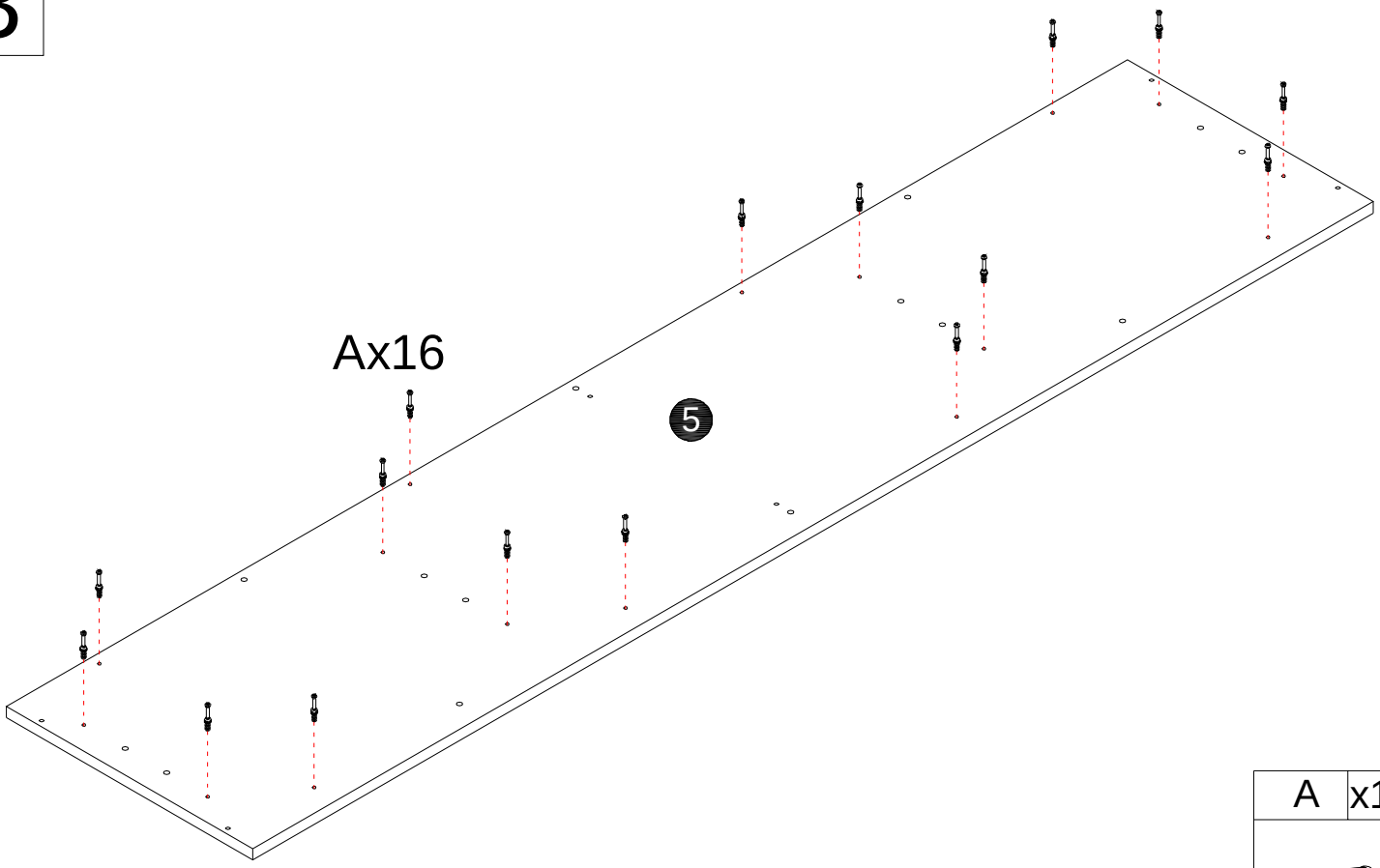

A	x16
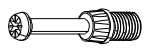	
M6x35mm	

4

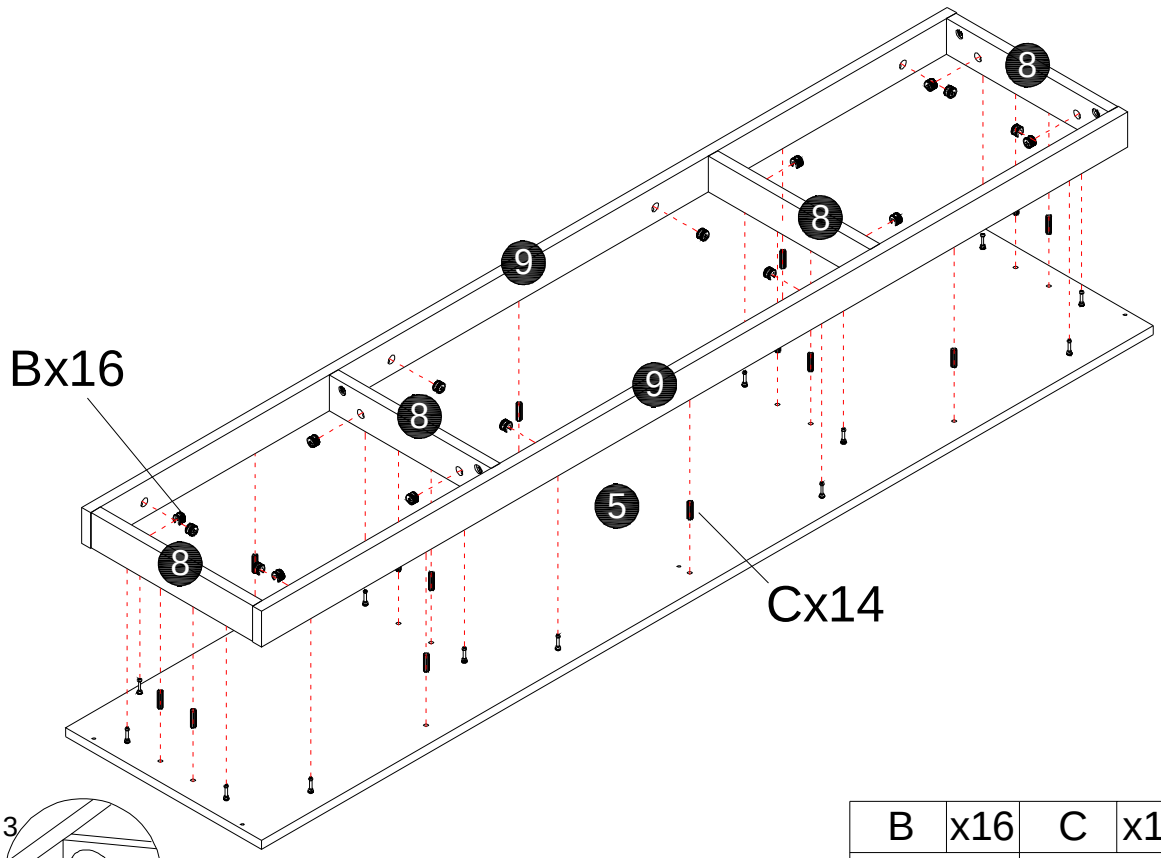

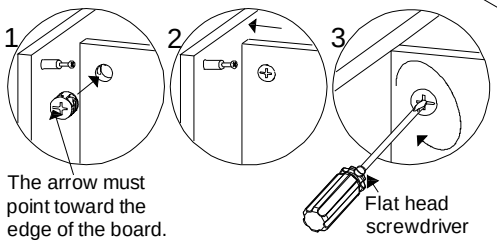

B	x16	C	x14
ϕ15mm		ϕ8x30mm	

5

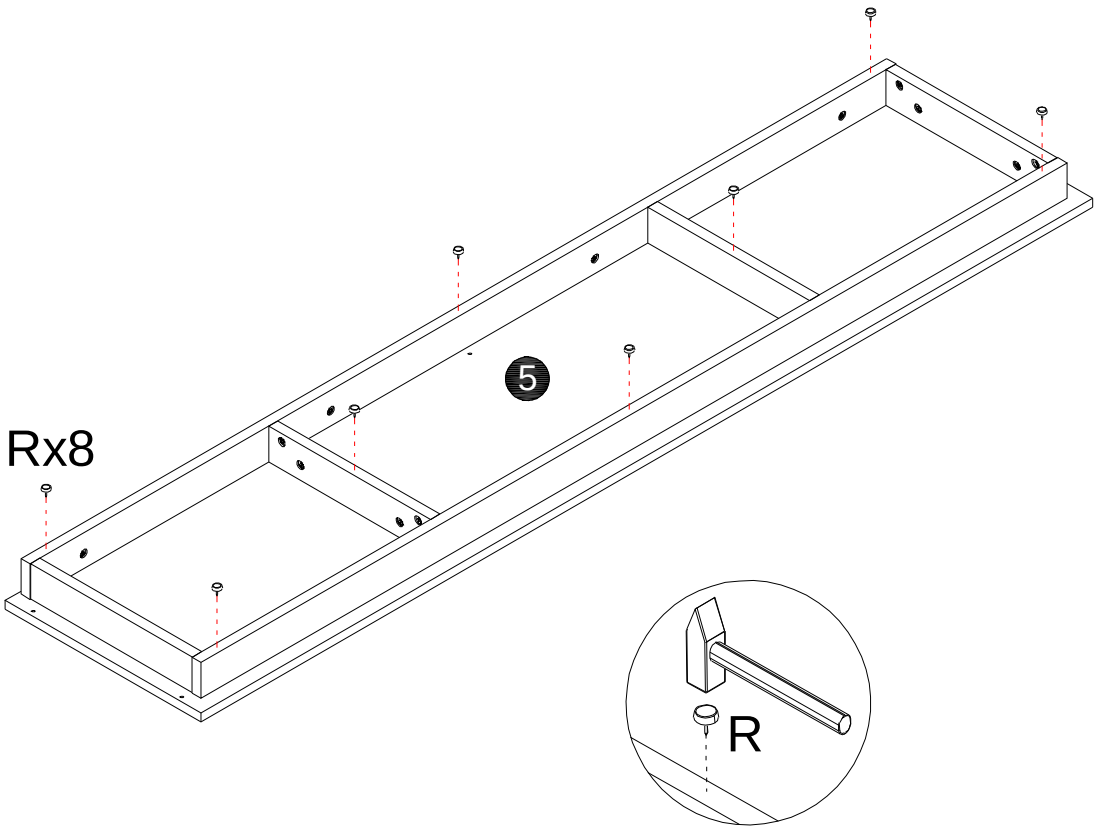

R	x8

6

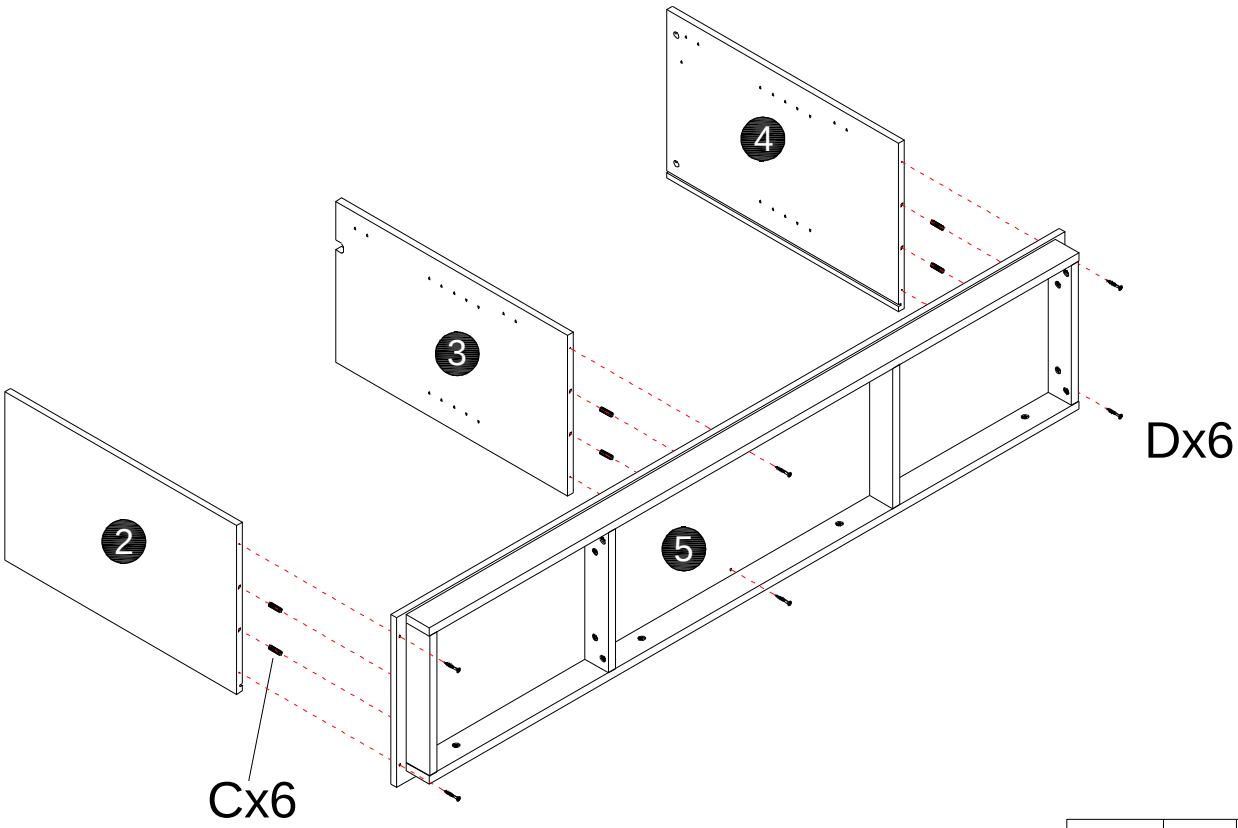

C	x6	D	x6
		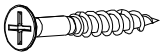	
ϕ8x30mm		M5x38mm	

7

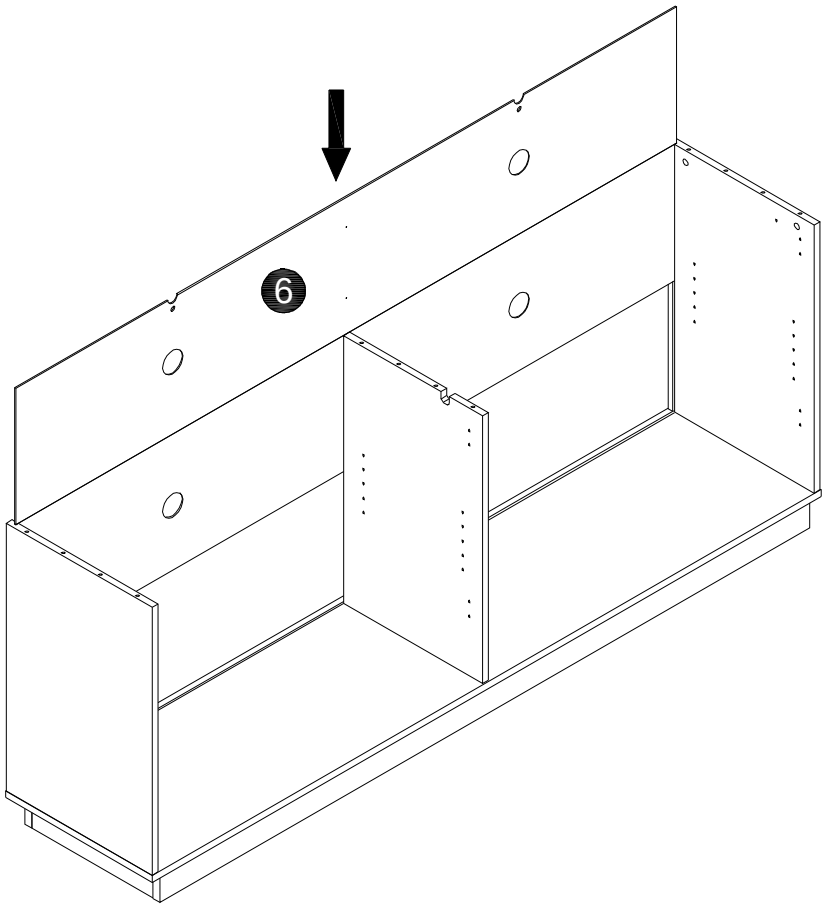

8

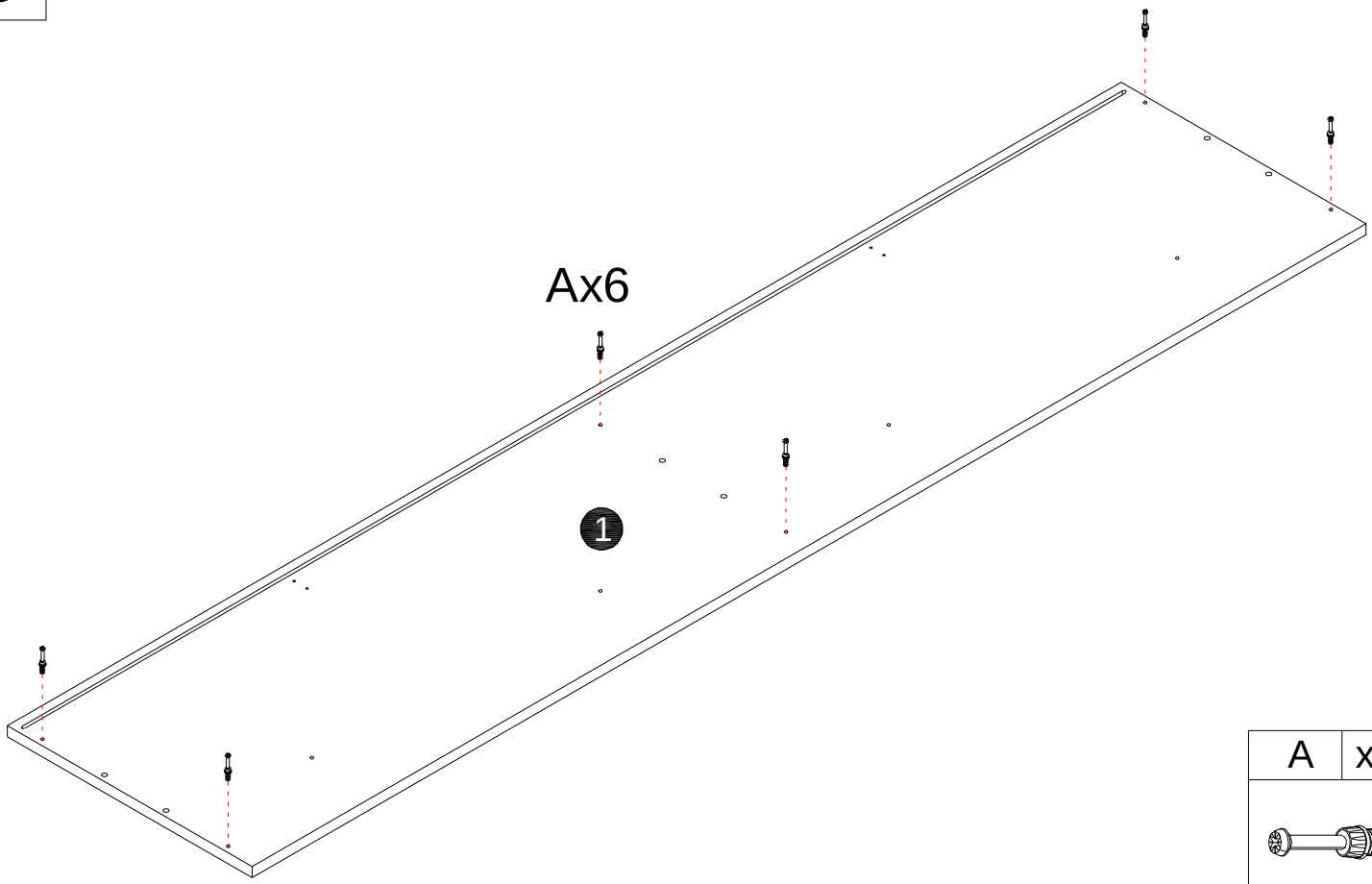

A	x6
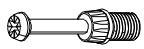	
M6x35mm	

9

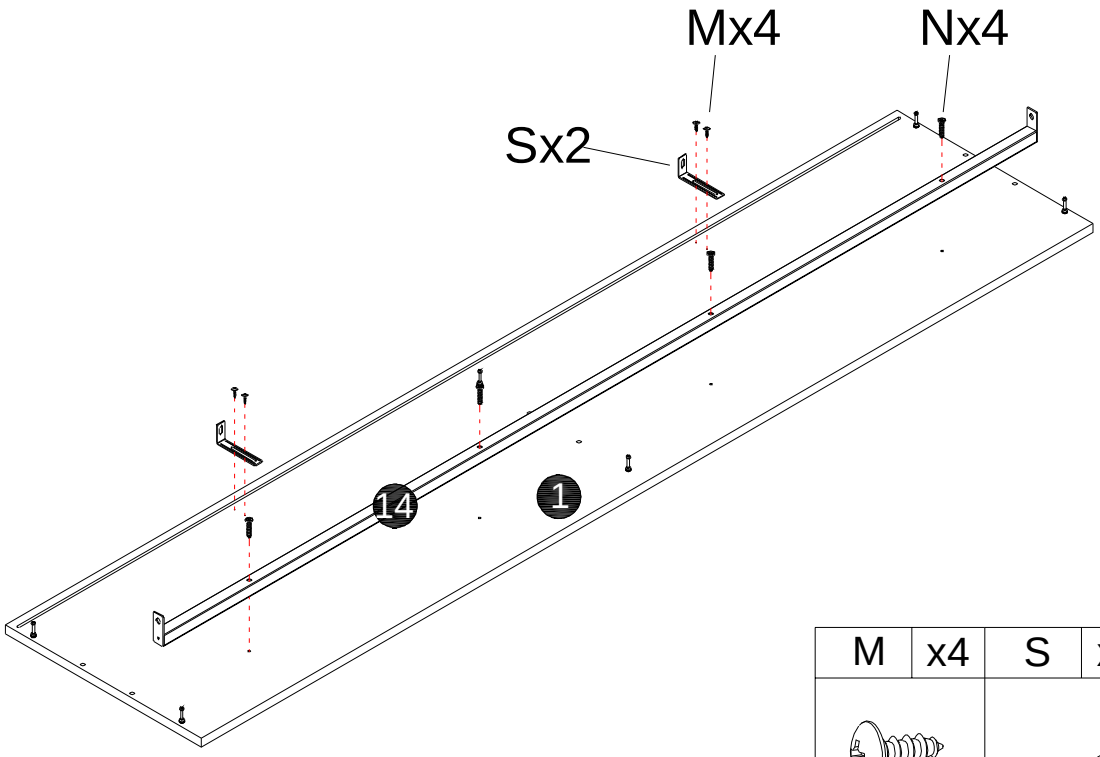

M	x4	S	x2	N	x4
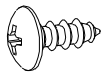		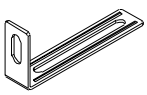		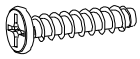	
M3.5x14mm				M6x28mm	

10

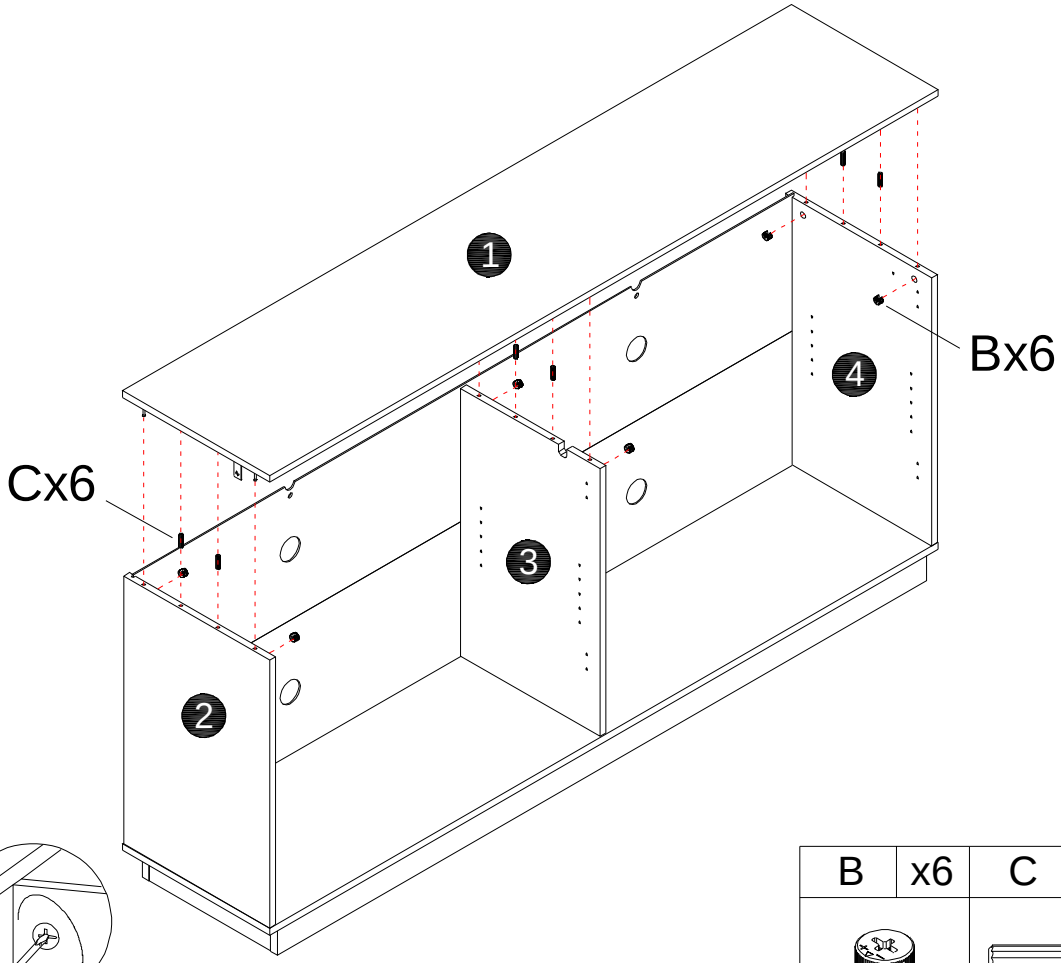

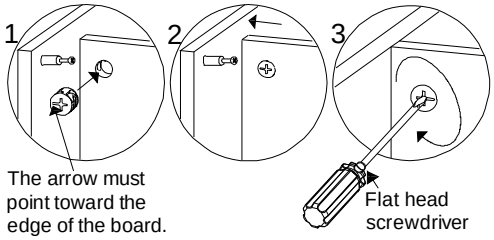

B	x6	C	x6
ϕ15mm		ϕ8x30mm	

11

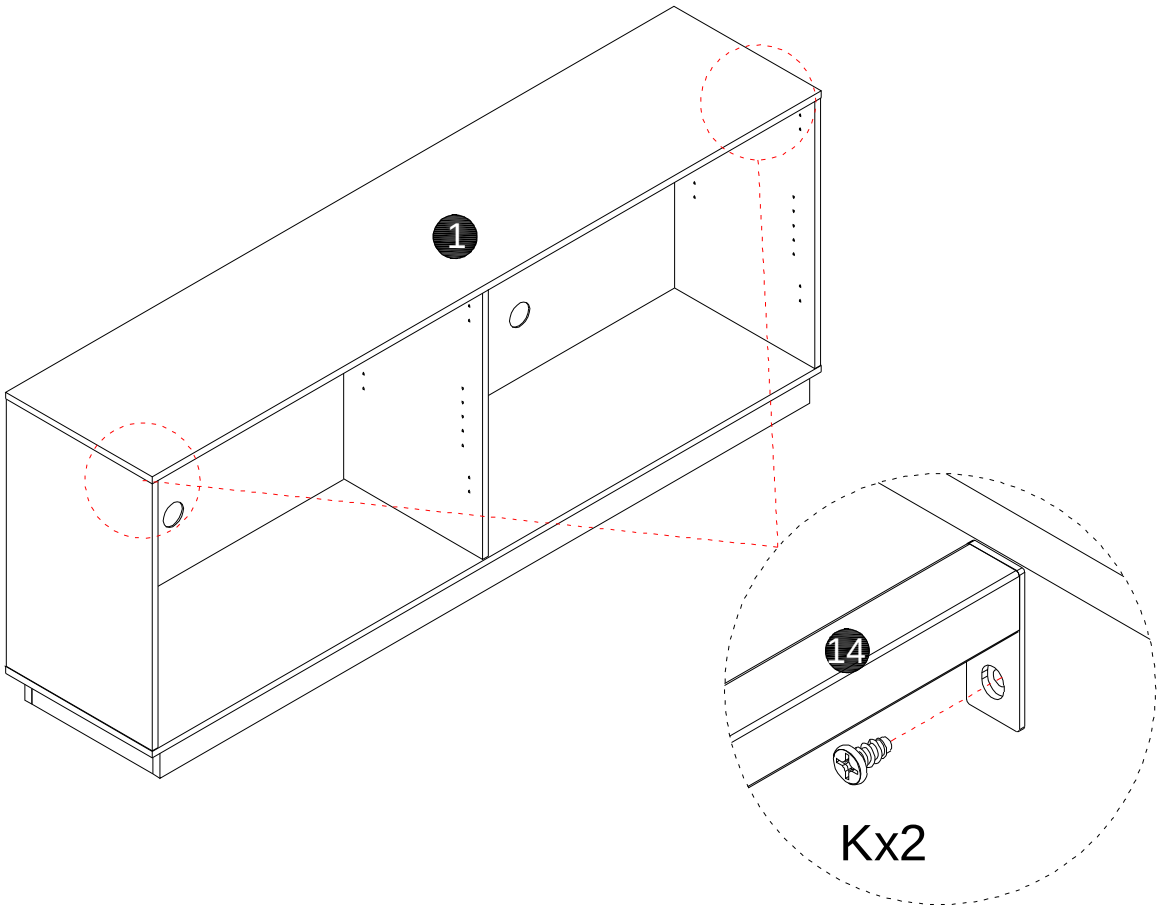

K	x2
M6x12mm	

12

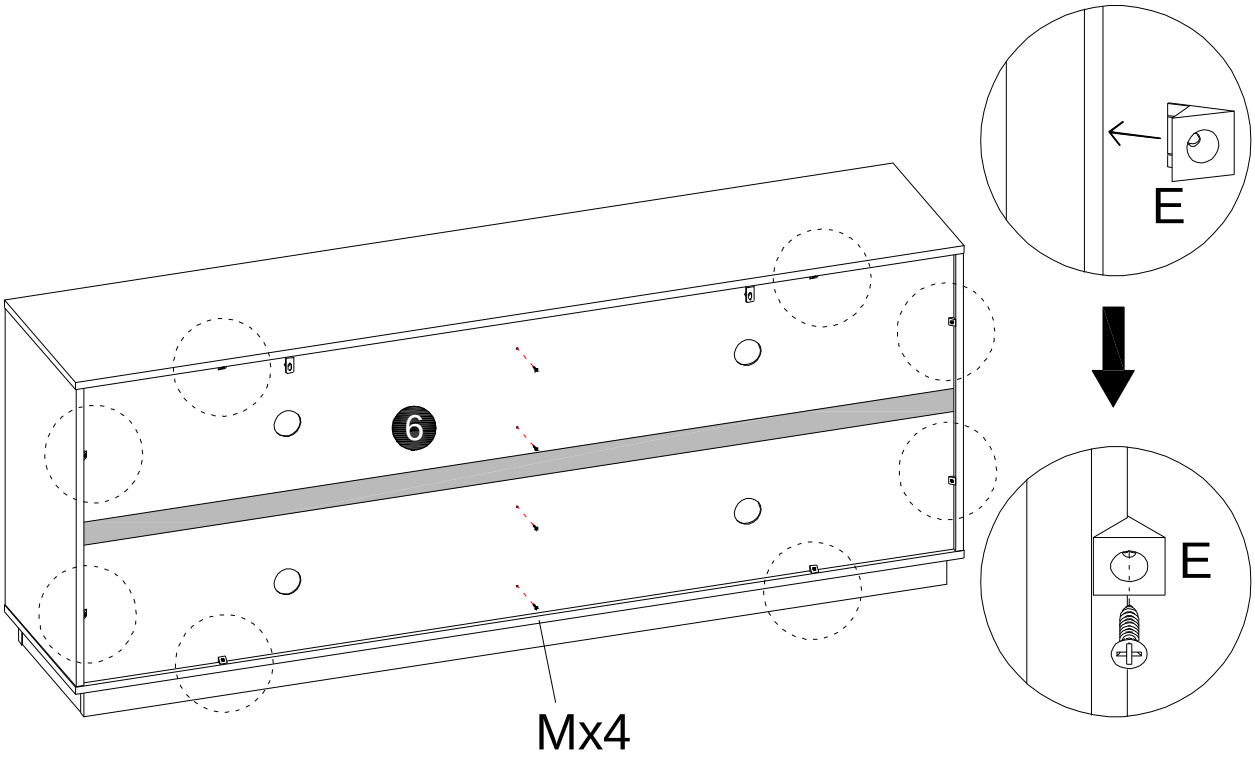

E	x8	M	x4
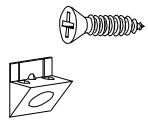		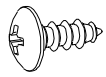	
		M3.5x14mm	

13

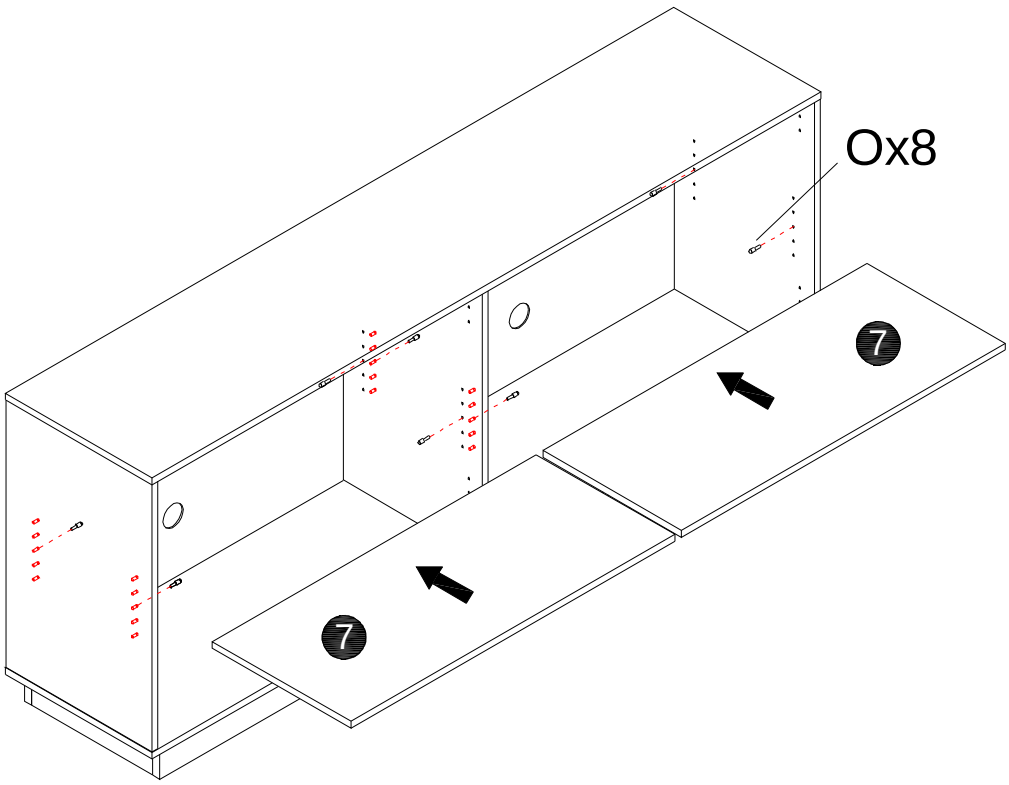

O	x8

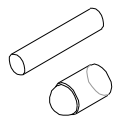

14

Please note that hinges H and I are different. Please install them on the corresponding numbered door panels as shown in the diagram.

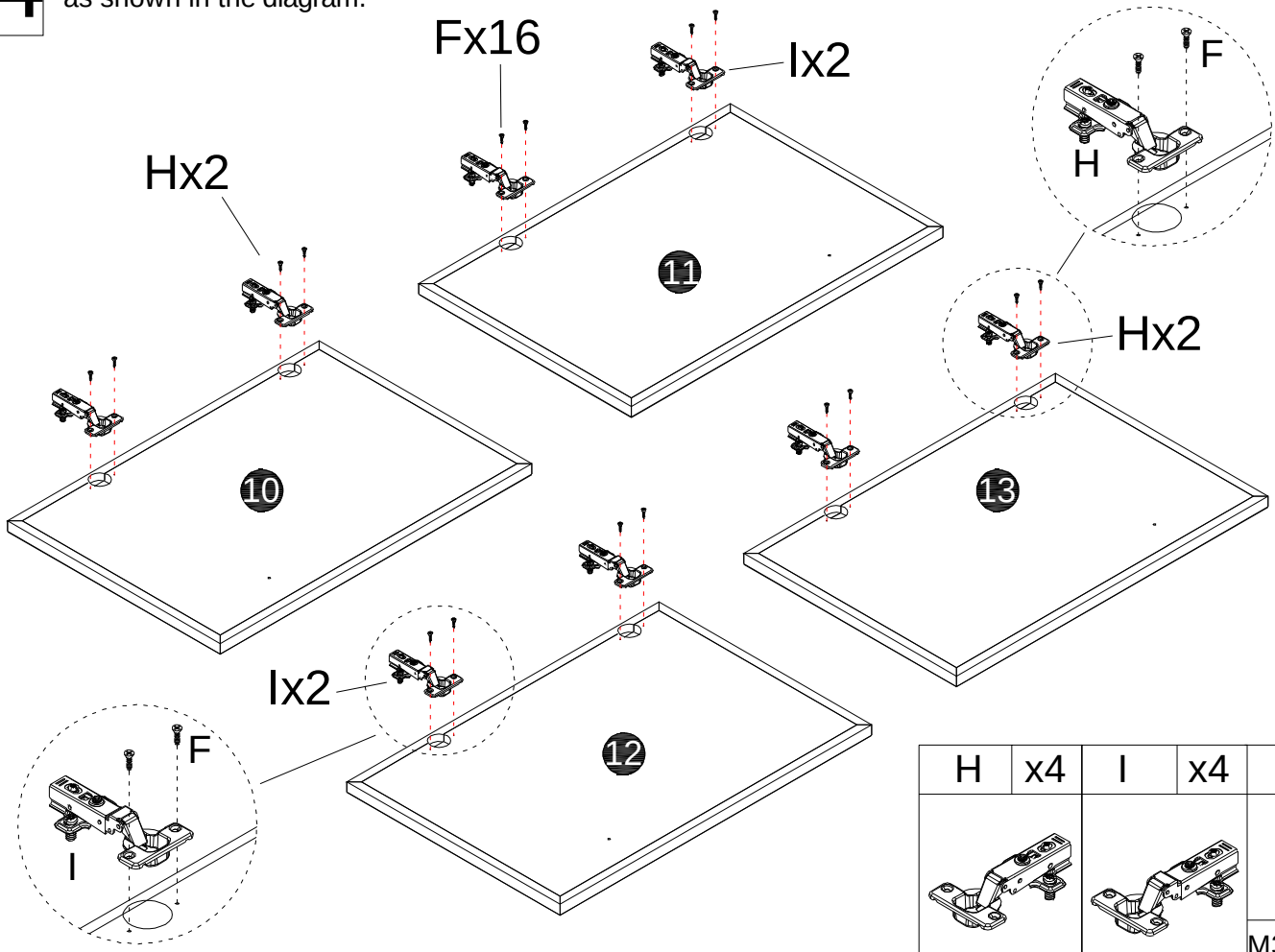

H	x4	I	x4	F	x16
				M3.5x16mm	

15

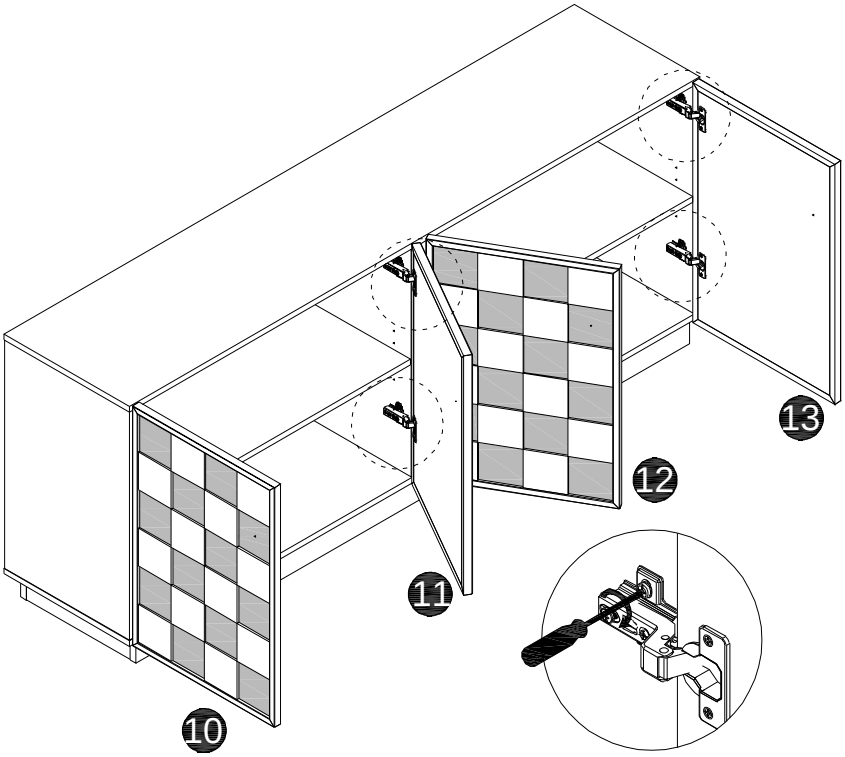

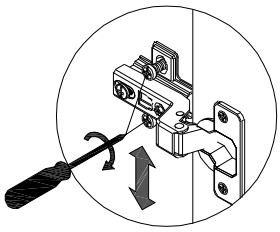

Align the screws with the reserved holes, adjust the position of the door up and down, and then tighten the screws.

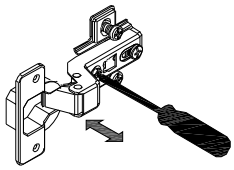

Adjust the left and right position of the door by rotating the screws counterclockwise or clockwise.

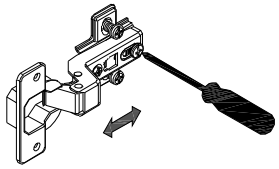

Loosen the screws, move the position of the door forward and backward. Then tighten the screws.

16

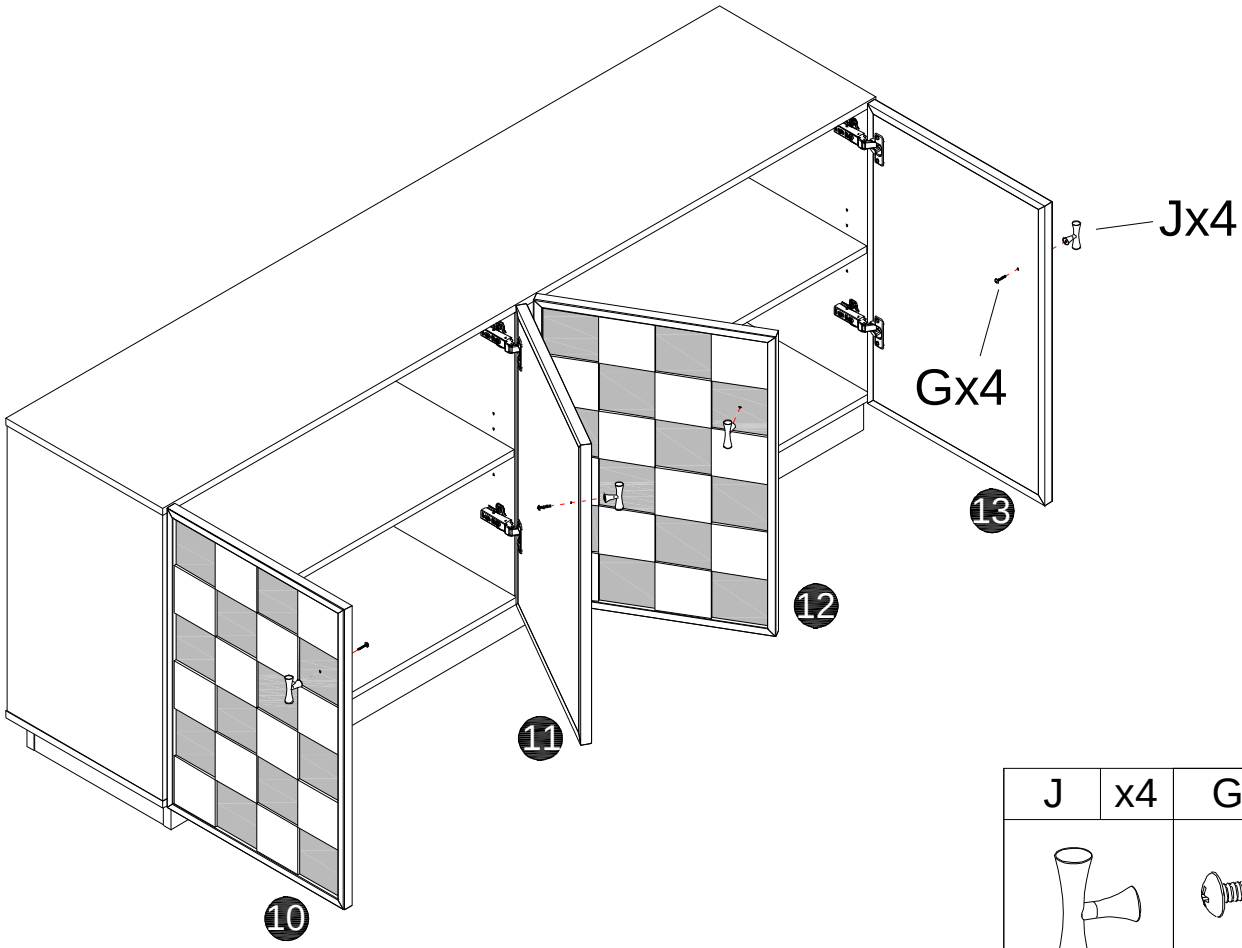

J	x4	G	x4
		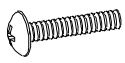	
		M4x16mm	

17

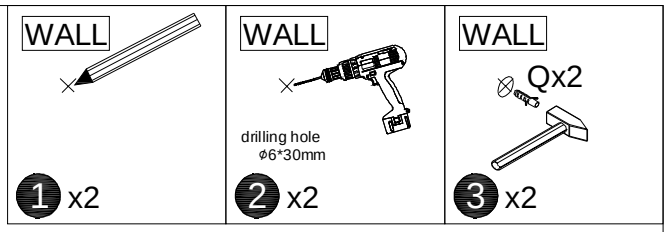

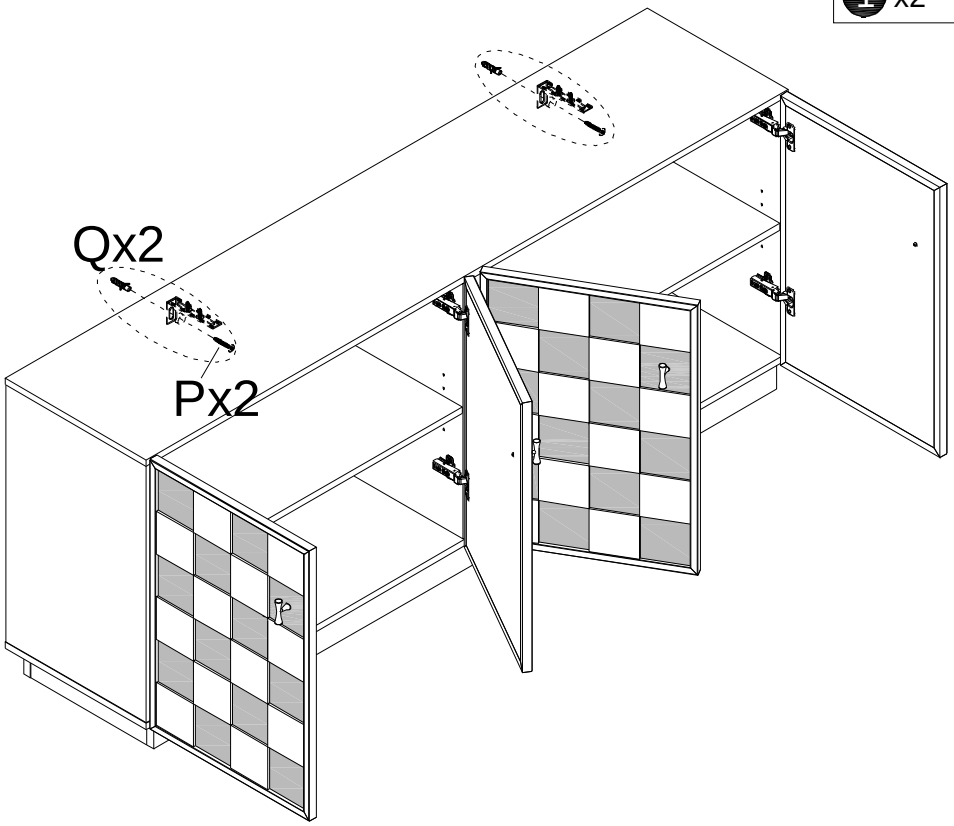

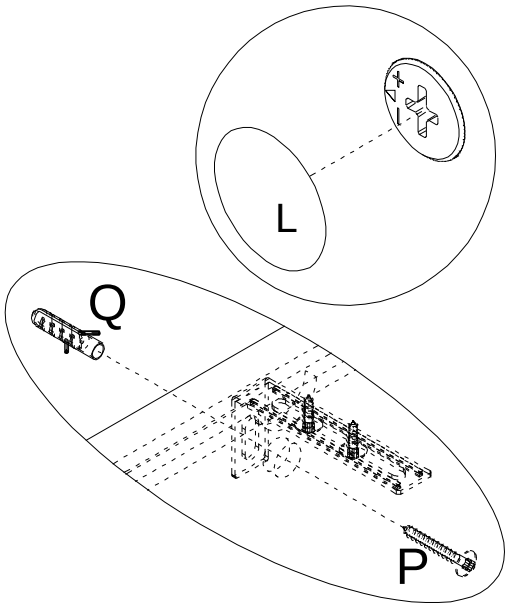

L	x2	P	x2	Q	x2
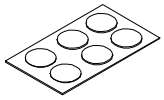		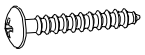		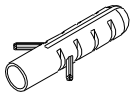	
ϕ25		M5x38mm			
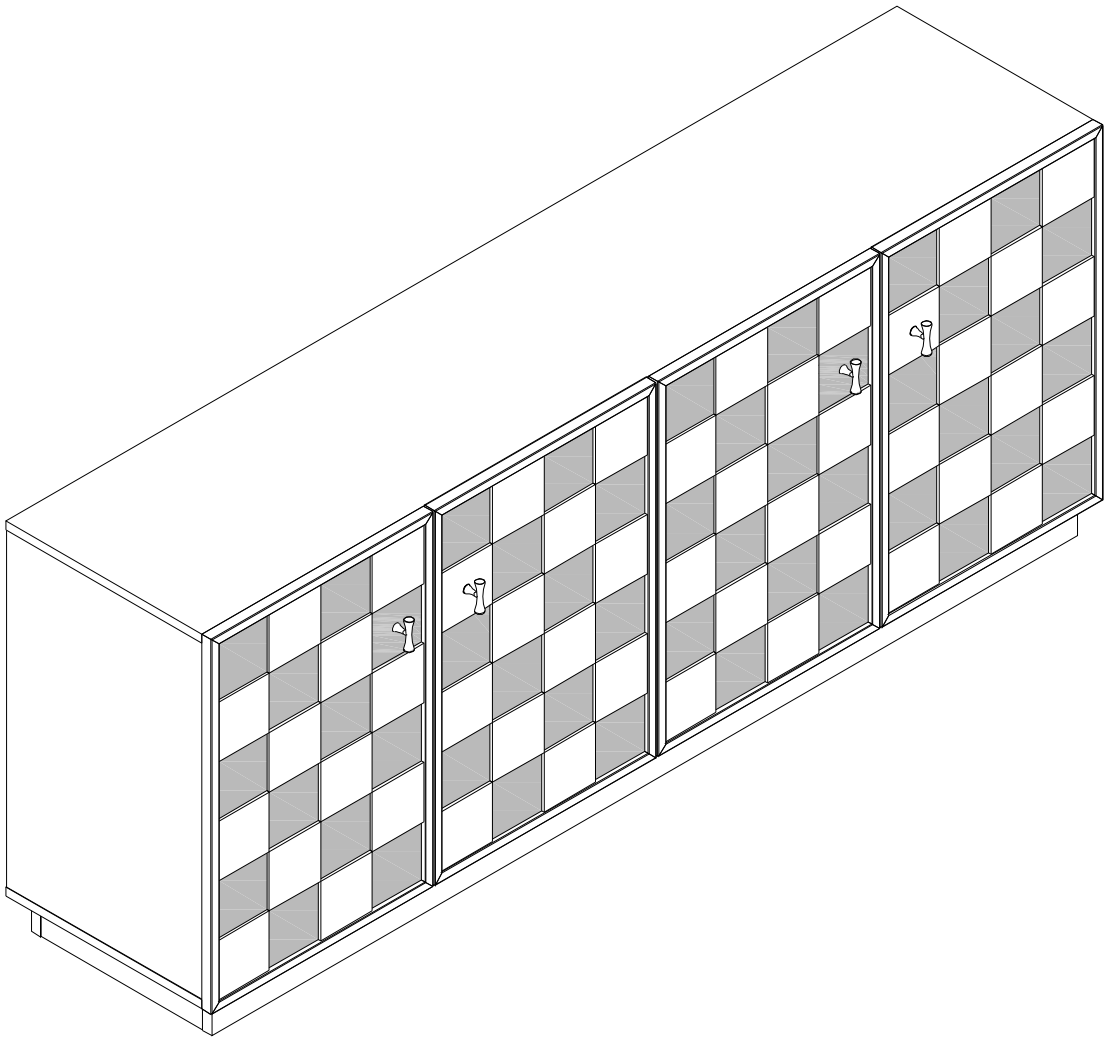
18