ASSEMBLYINDTRUCTION

Ⓐ x1

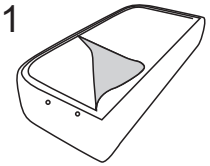

Ⓑ x1

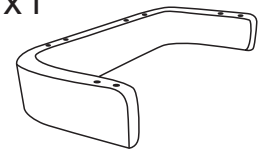

Ⓒ x4

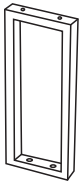

Ⓓ x2

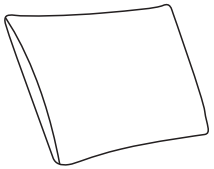

Screw Bag

Ⓔ x16  M6*60	Ⓕ x1 
Ⓖ x16  M6	x1  x1  SPARE PARTS

After taking out the compressed pillow from the cushion, please tear open the package and gently pat it to assist with rebound. Leave it for approximately 24 hours, and it will return to its original shape.

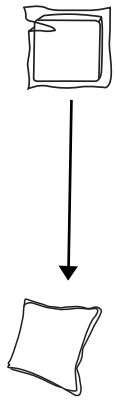

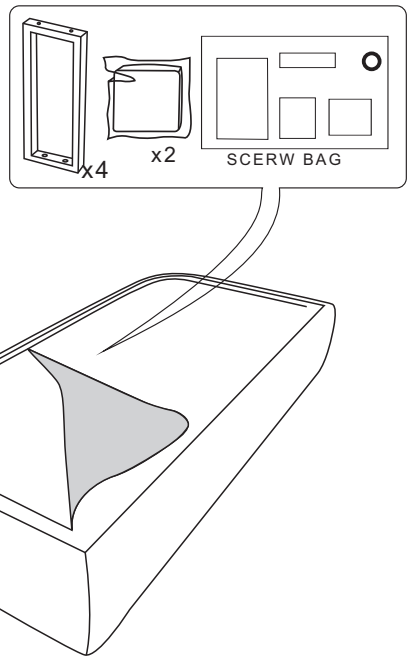

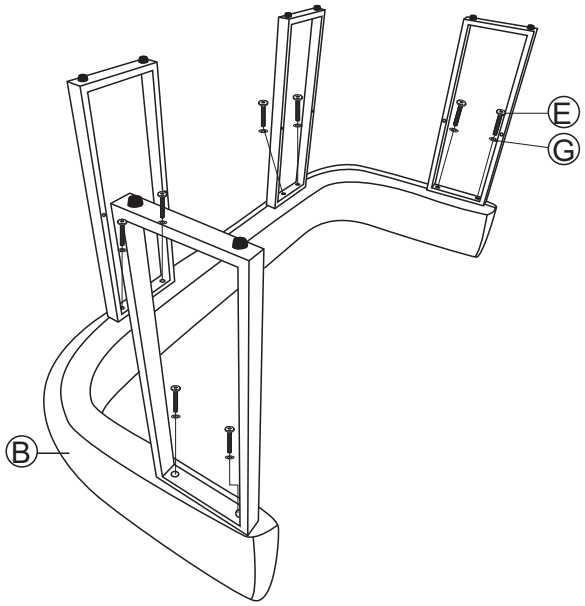

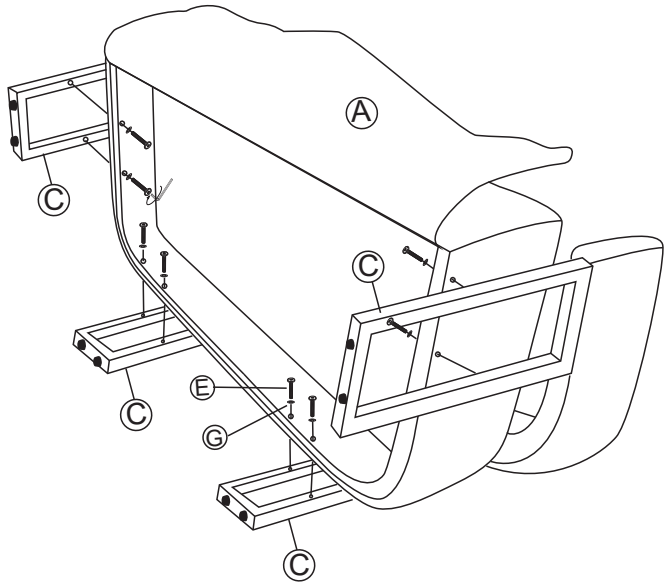

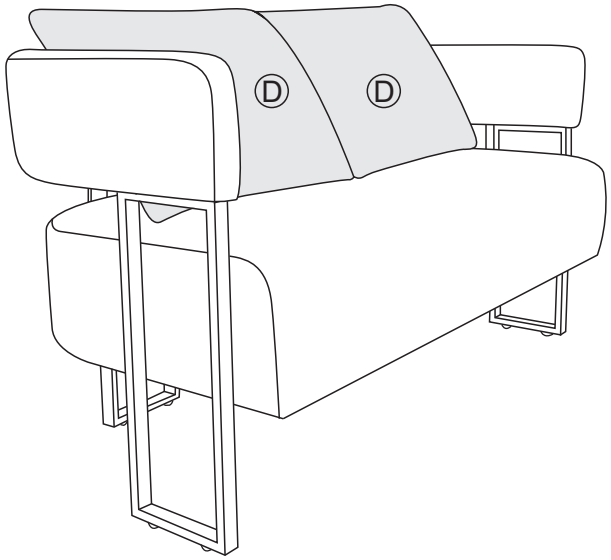

PROBLEM WITH YOUR PURCHASE?Contact Us First!
E-mail us at:after-sales@163.com