14 x 20FT

XWG - 250TN-2

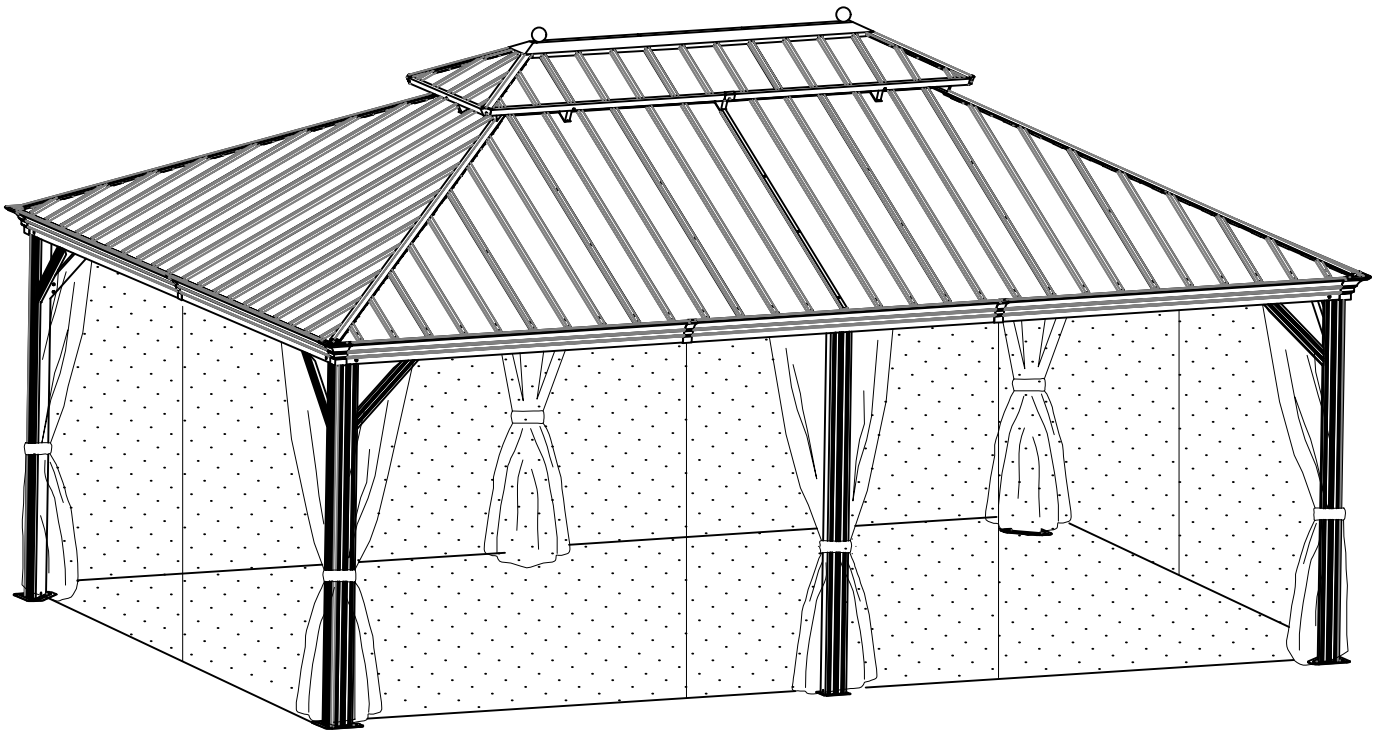



A 4x

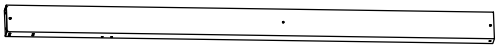

A1 2x



B11 4x



B12 4x



B8 2x



E4 4x



E5 4x



C3 4x



C4 4x



C11 2x



C12 2x



D11 2x



D12 2x

D13 4x

D14 4x

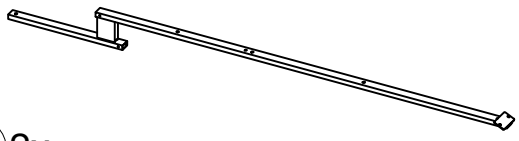

E6 2x

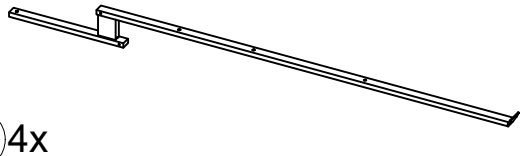

E7 4x

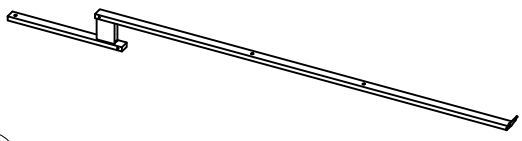

E8 2x

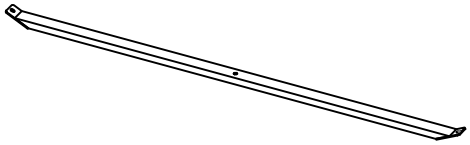

F8 3x

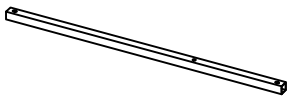

F4 8x

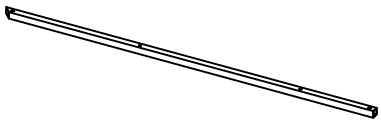

F6 8x

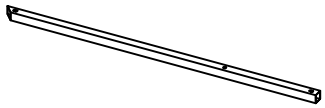

F7 8x

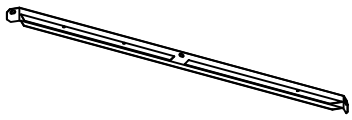

G1 2x

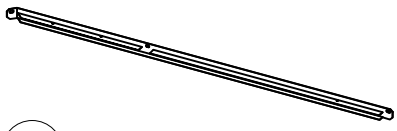

G7 2x



G8 2x

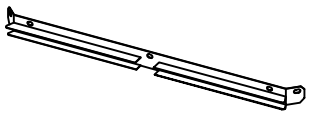

I1 2x



I7 2x



I8 2x

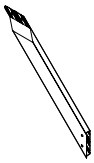

H 4x

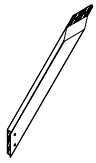

H1 4x

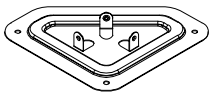

J 4x

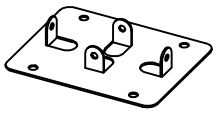

J1 2x



K 4x



K1 6x

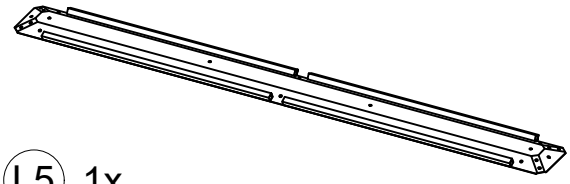

L5 1x

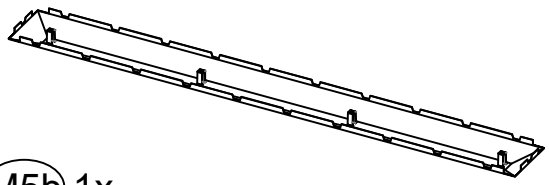

M5b 1x



N 8x



N1 2x

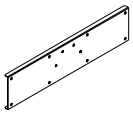

P 6x

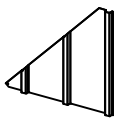

S1 4x

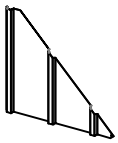

S2 4x

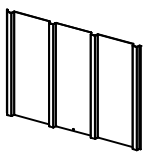

S3 6x

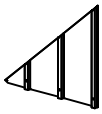

R1 4x

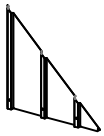

R2 4x

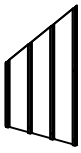

R3 4x



R4 4x

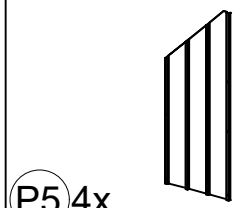

P5 4x



P6 4x



P7 2x



P8 2x



P9 6x

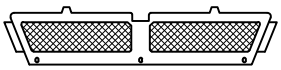

V1 2x



V5a 2X



V5b 2x

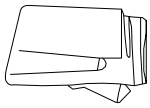

T 4x + 2x

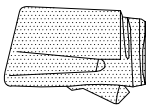

T1 4x + 2x



U 160x



Y 134x

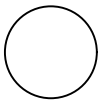

Za 2x

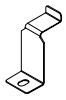

V 6x



W 8x

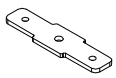

W1 16x



W3 8x



W4 8x

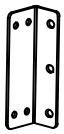

W5 4x

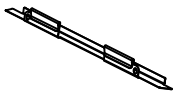

Z 72x

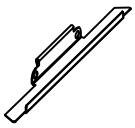

Z1 16x



Z2 8x



M5x15

15 40x



M6x15

1 410x



M6x23

2 96x



M6x25

3 2x



ST 4.8x12

4 28x



5 3x



M6x42

6 4x



M6x47

7 32x



8 16x



M6x10

9 12x



10 20x



12 2x 4mm

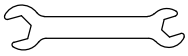

14 1x

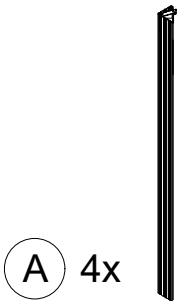

A 4x

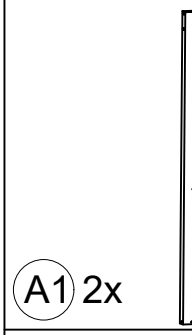

A1 2x

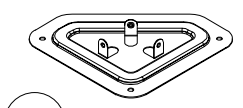

J 4x

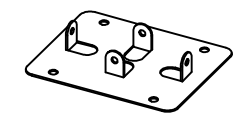

J1 2x

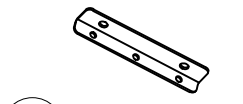

W3 8x



W4 8x

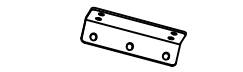

W5 4x

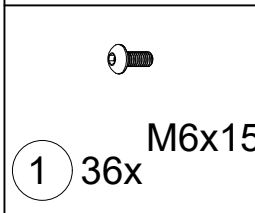

1 36x M6x15

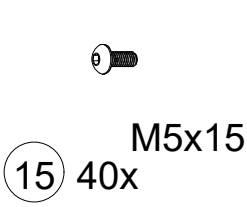

15 40x M5x15

5

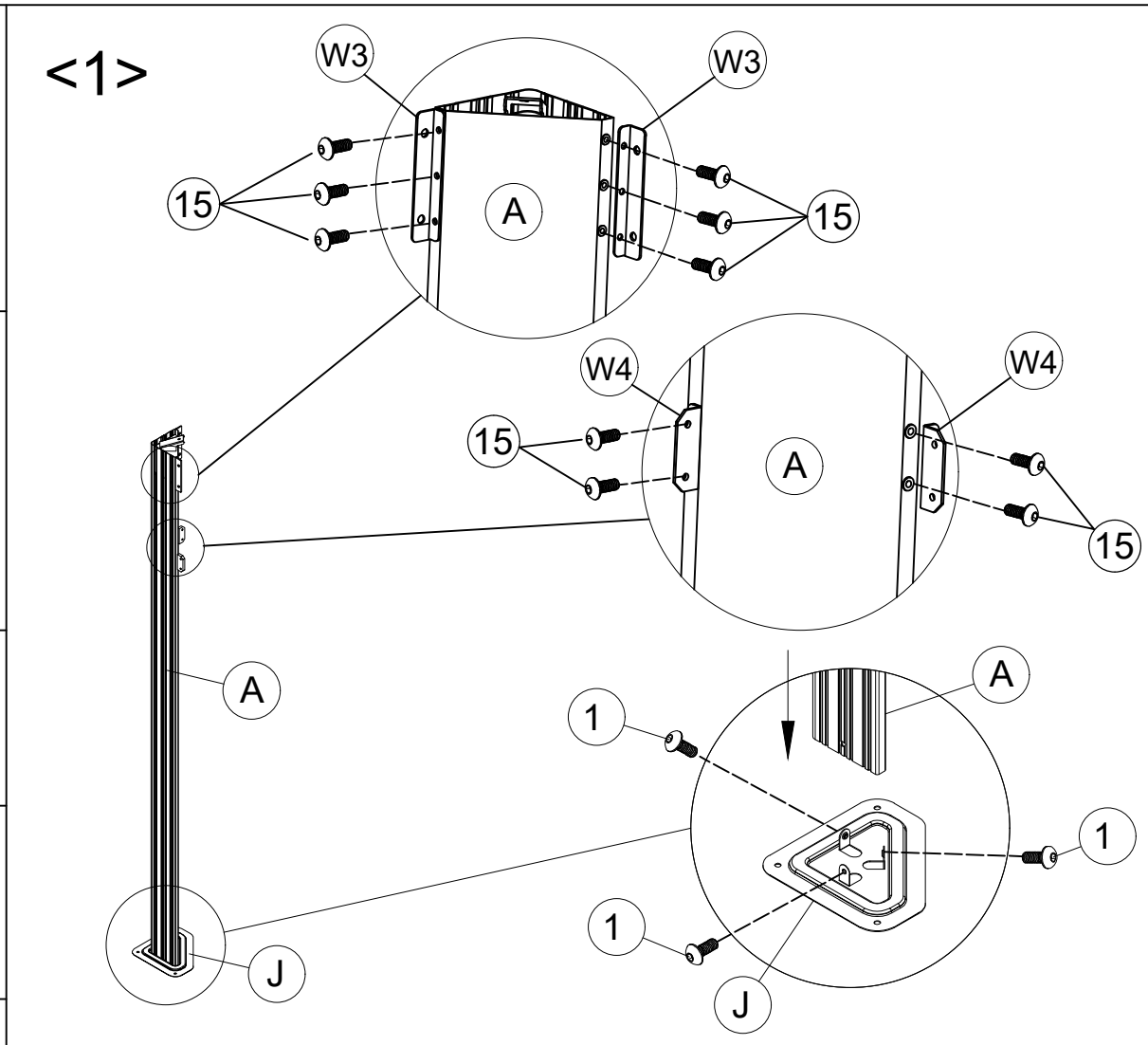

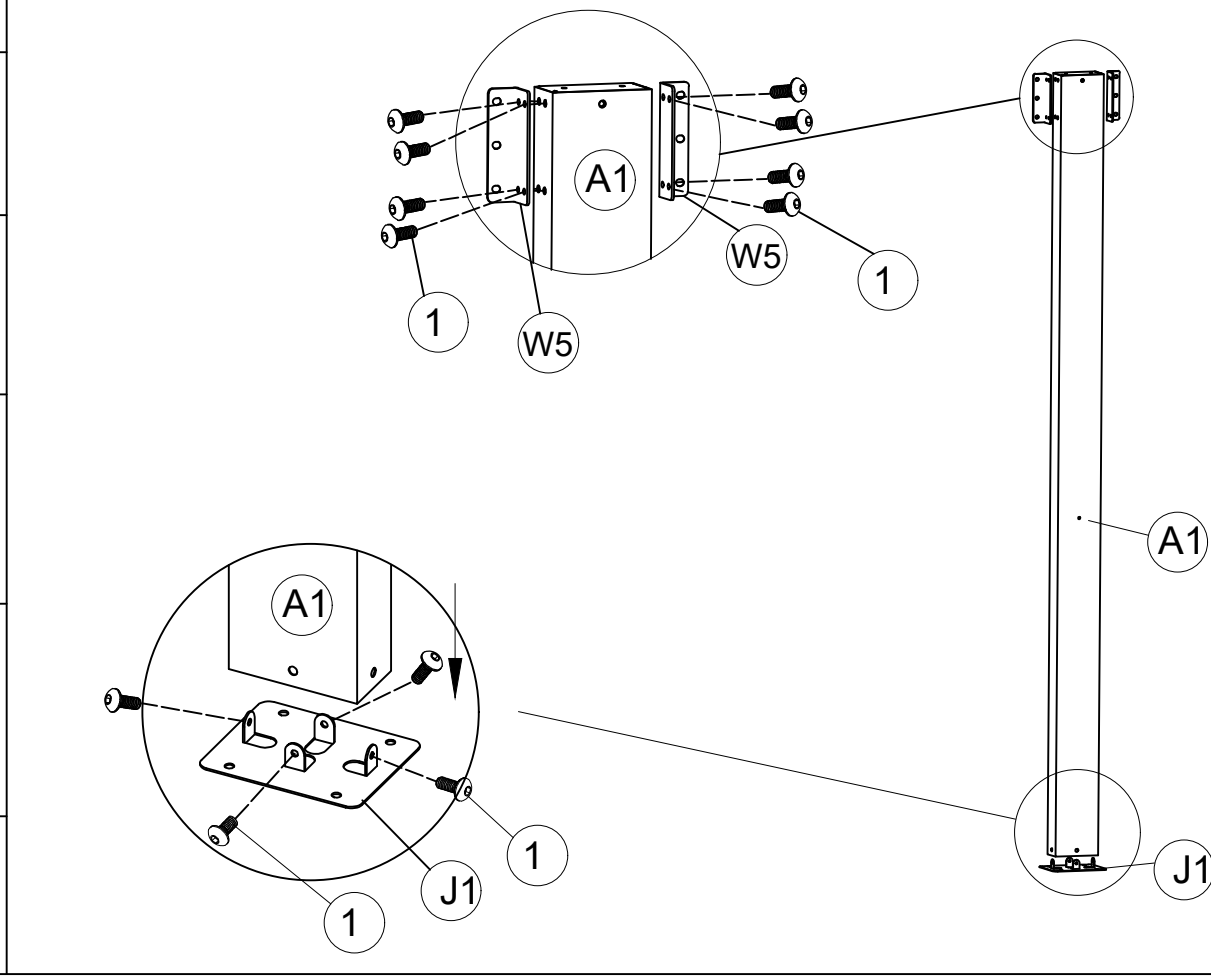

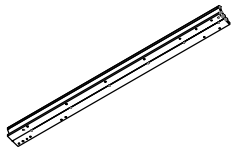

B11 2x

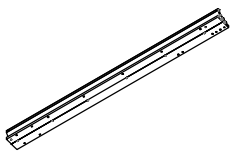

B12 2x

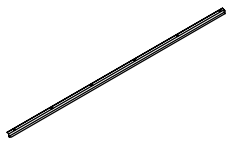

C3 2x

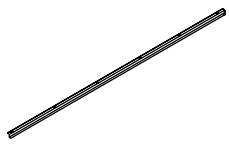

C4 2x

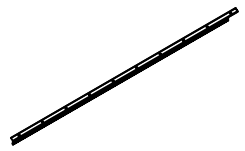

D13 2x

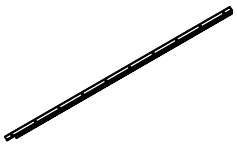

D14 2x

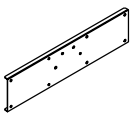

P 2x



1 60x M6x15

6

<3>

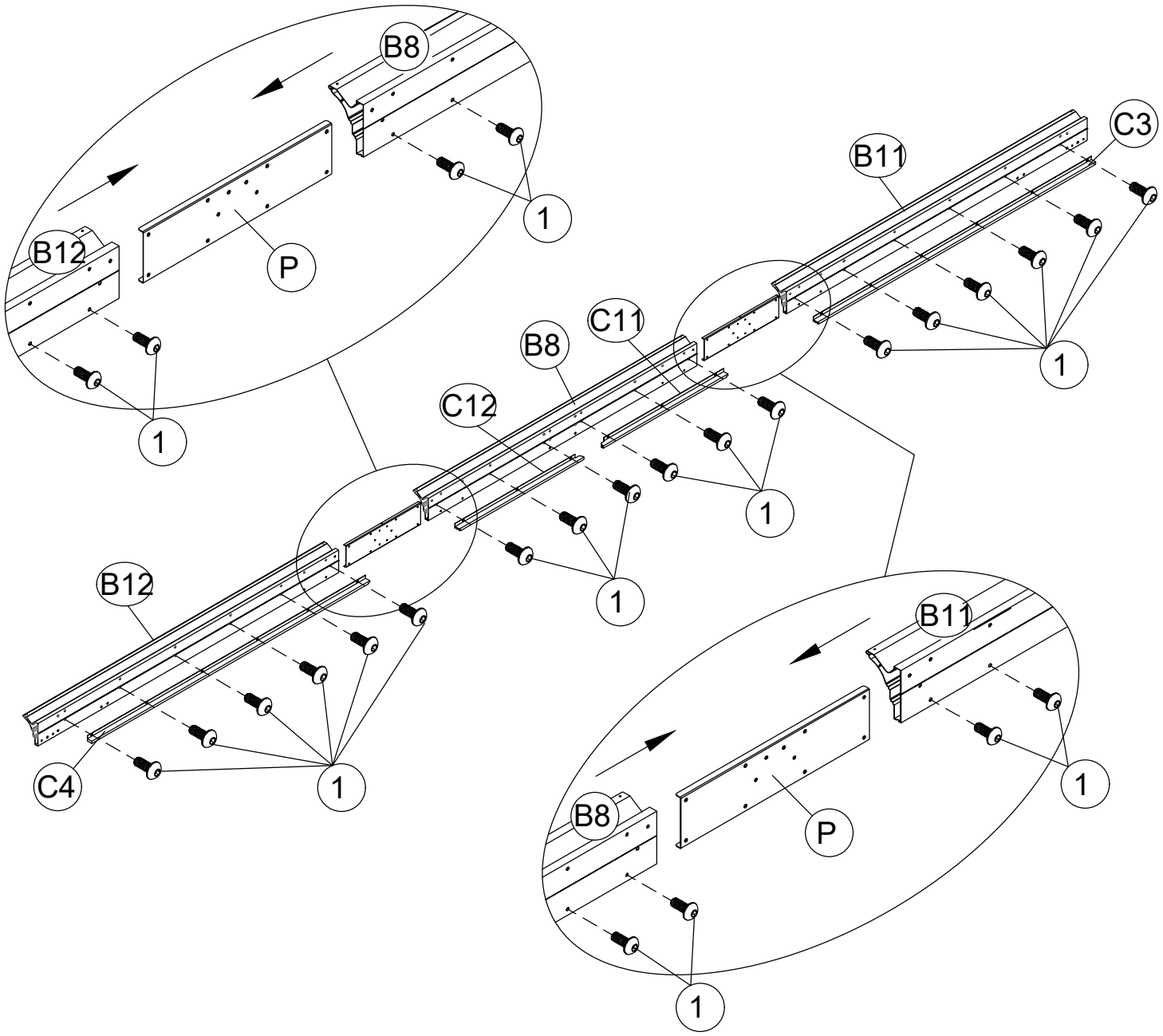

P 4x	C3 2x	C4 2x	C11 2x	C12 2x
1 52x M6x15	B11 2x	B12 2x	B8 2x	

<4>

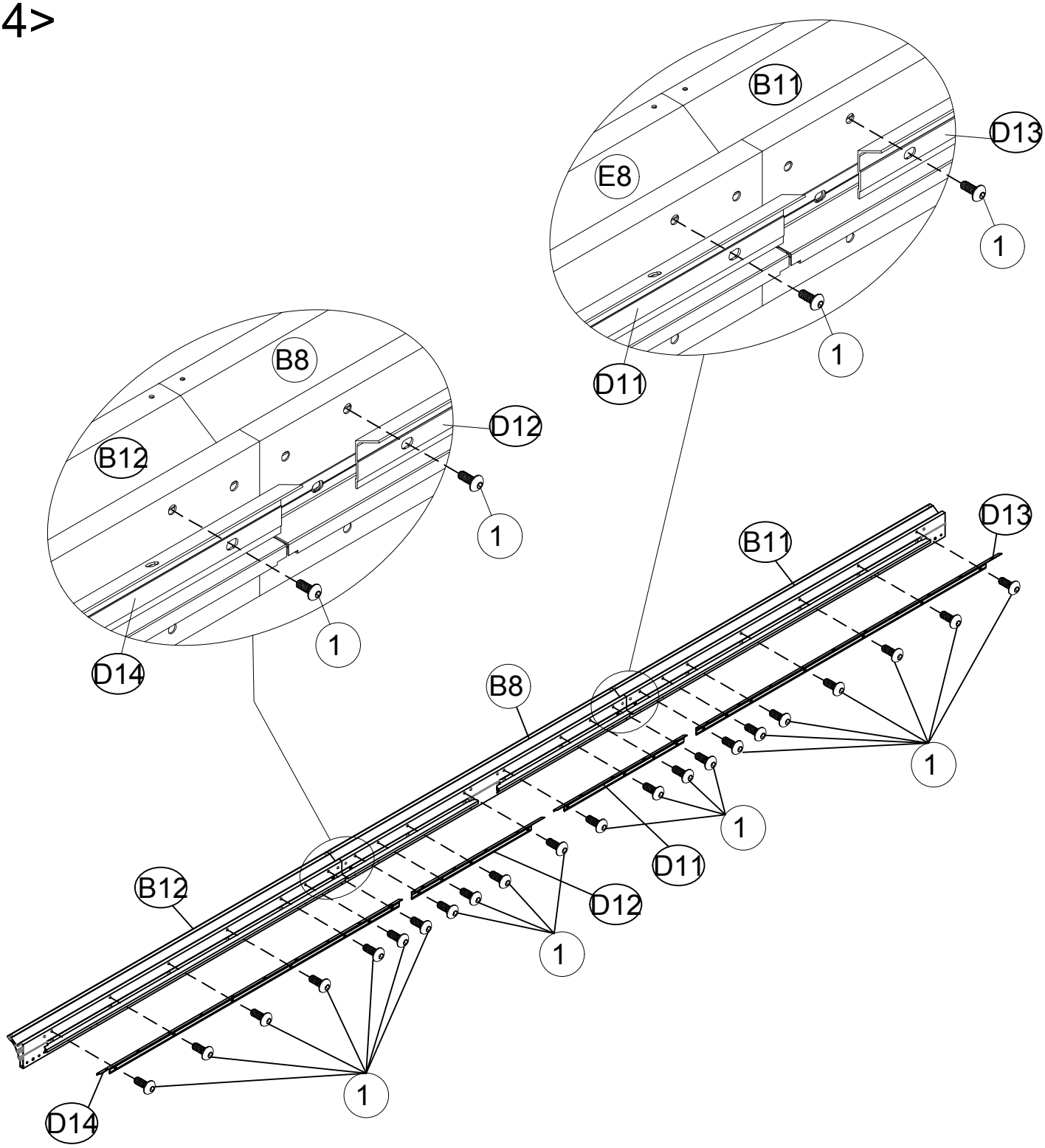

1 44 M6x15	D11 2x	D12 2x
8	D13 2x	D14 2x

M6x15

1 28x

8 16x

<5>

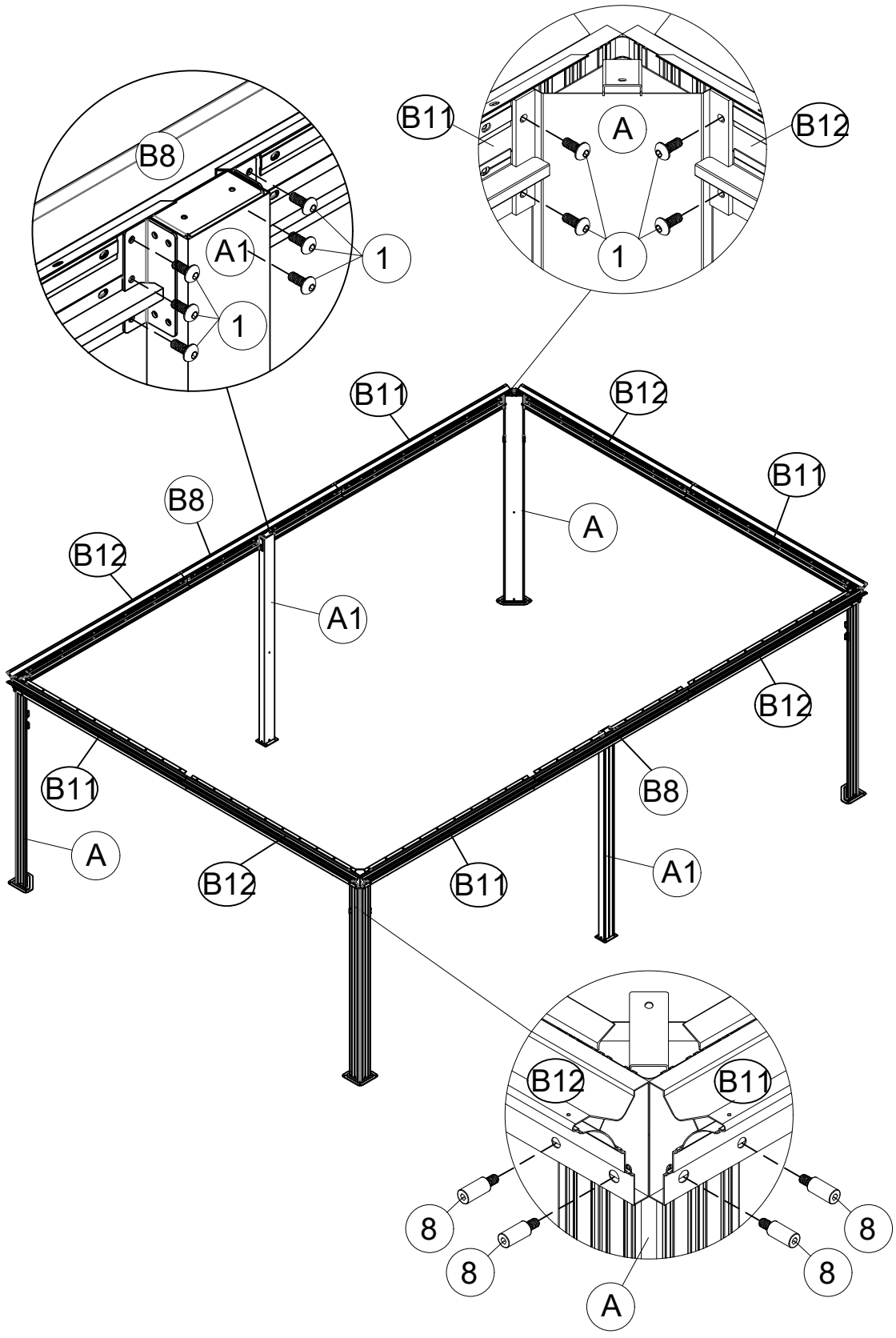

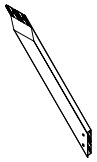

H 4x

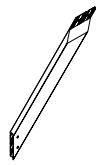

H1 4x



M6x15

1 32x



10 20x

<6>

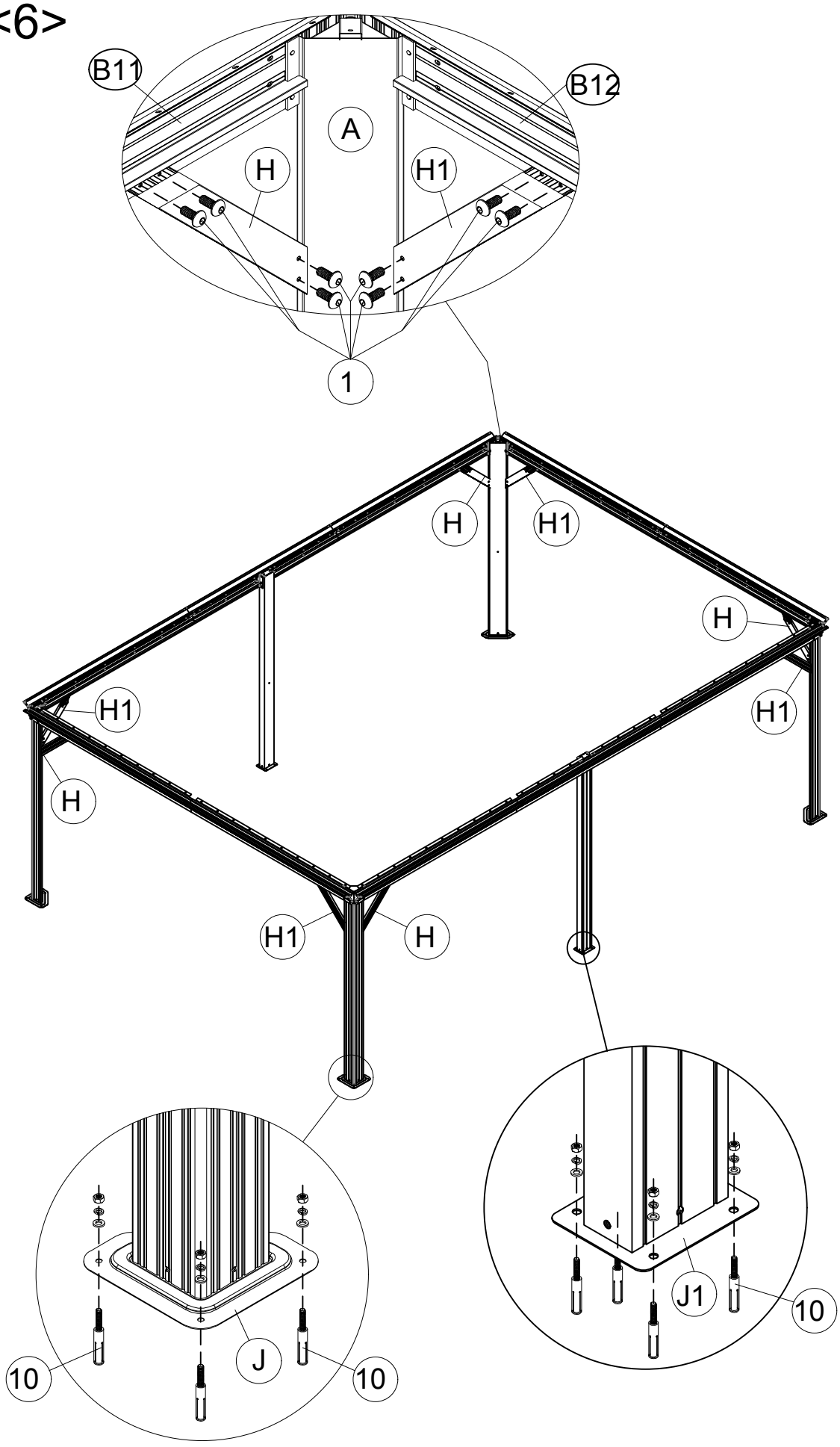

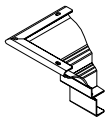

K 4x

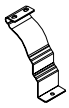

K1 6x



U 160x

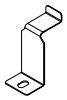

V 6x



M6x15

1 6x



ST4.8x12

4 28x

11

<7>

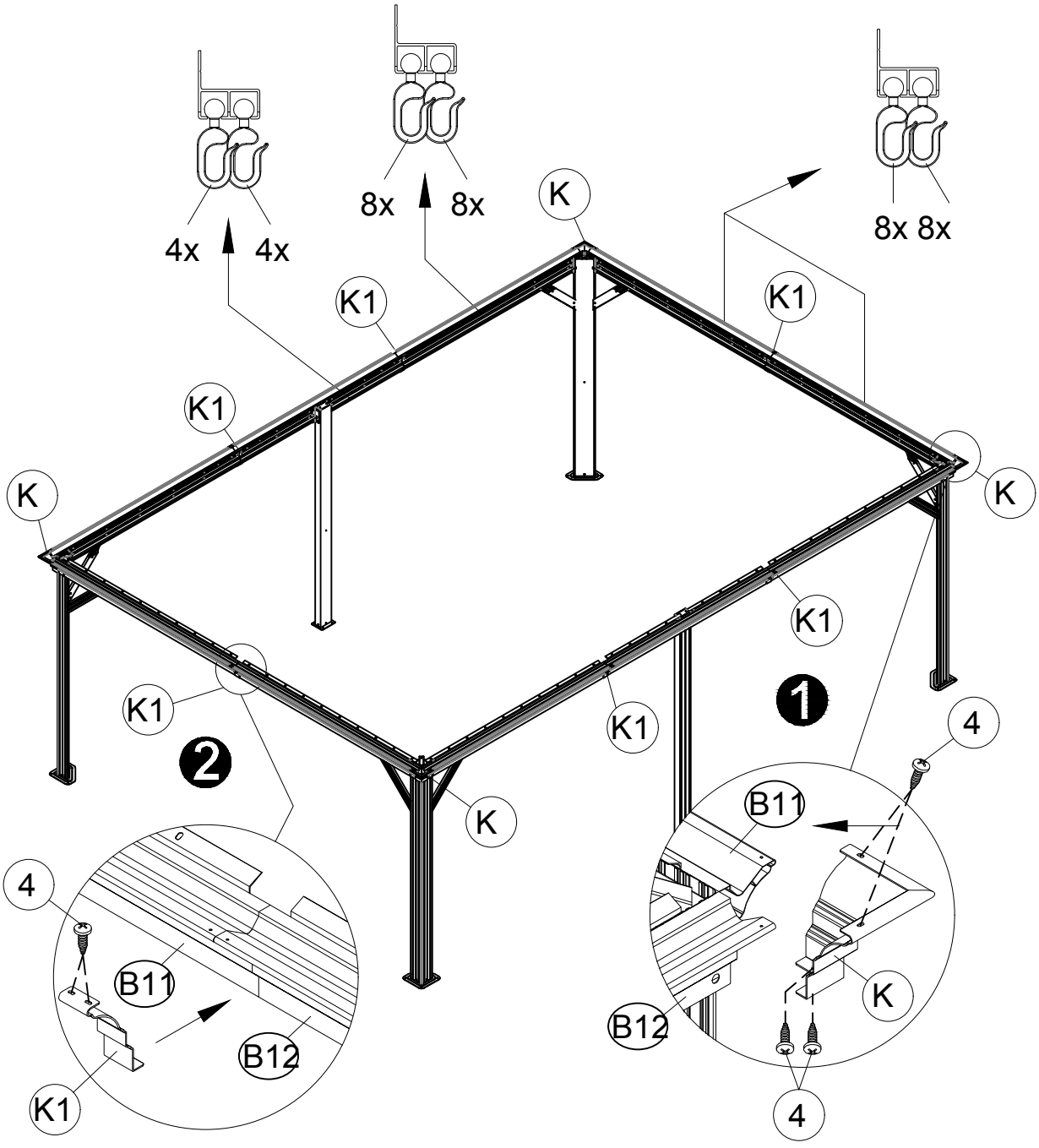



E6 2x



E7 4x

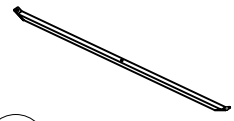

F8 3x

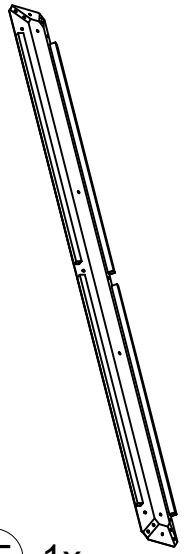

L5 1x



M6x15

1 24x

12

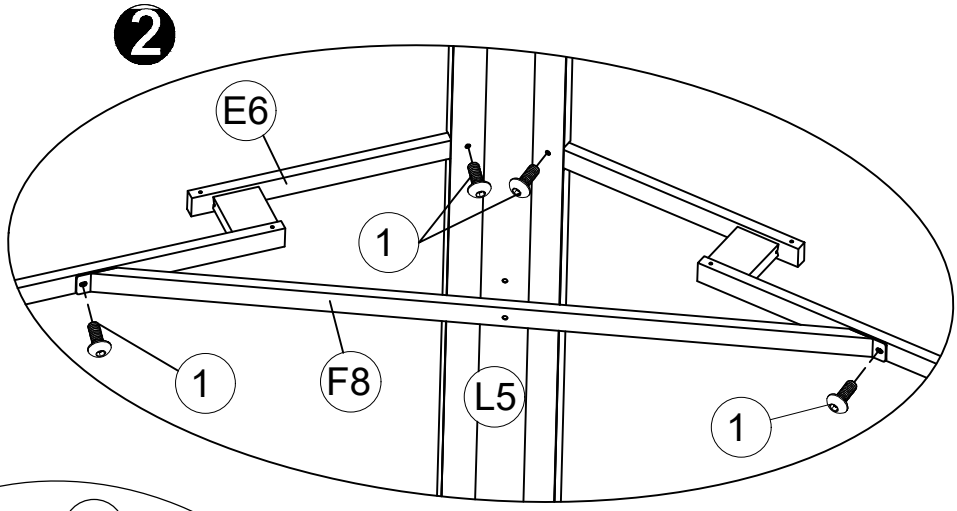

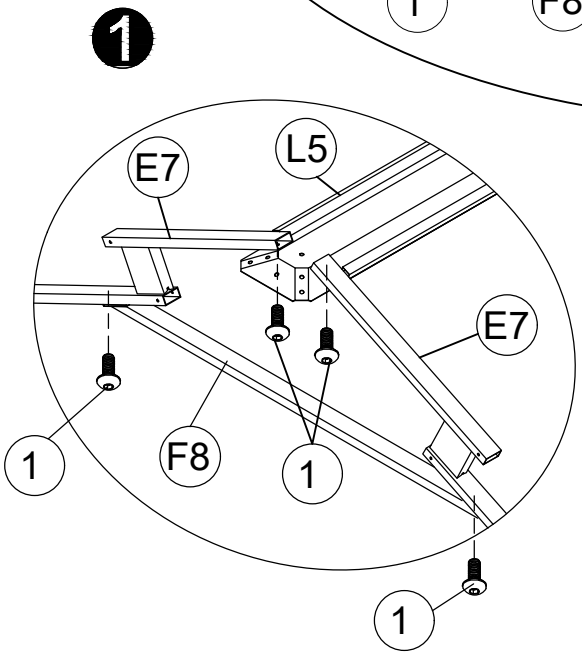

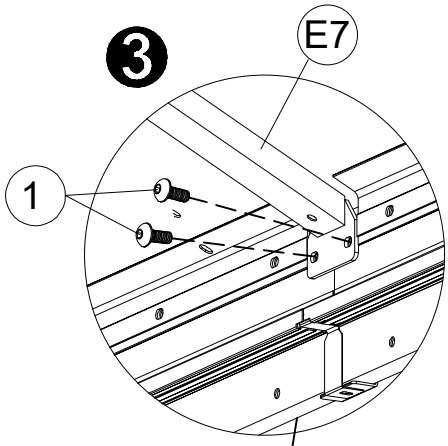

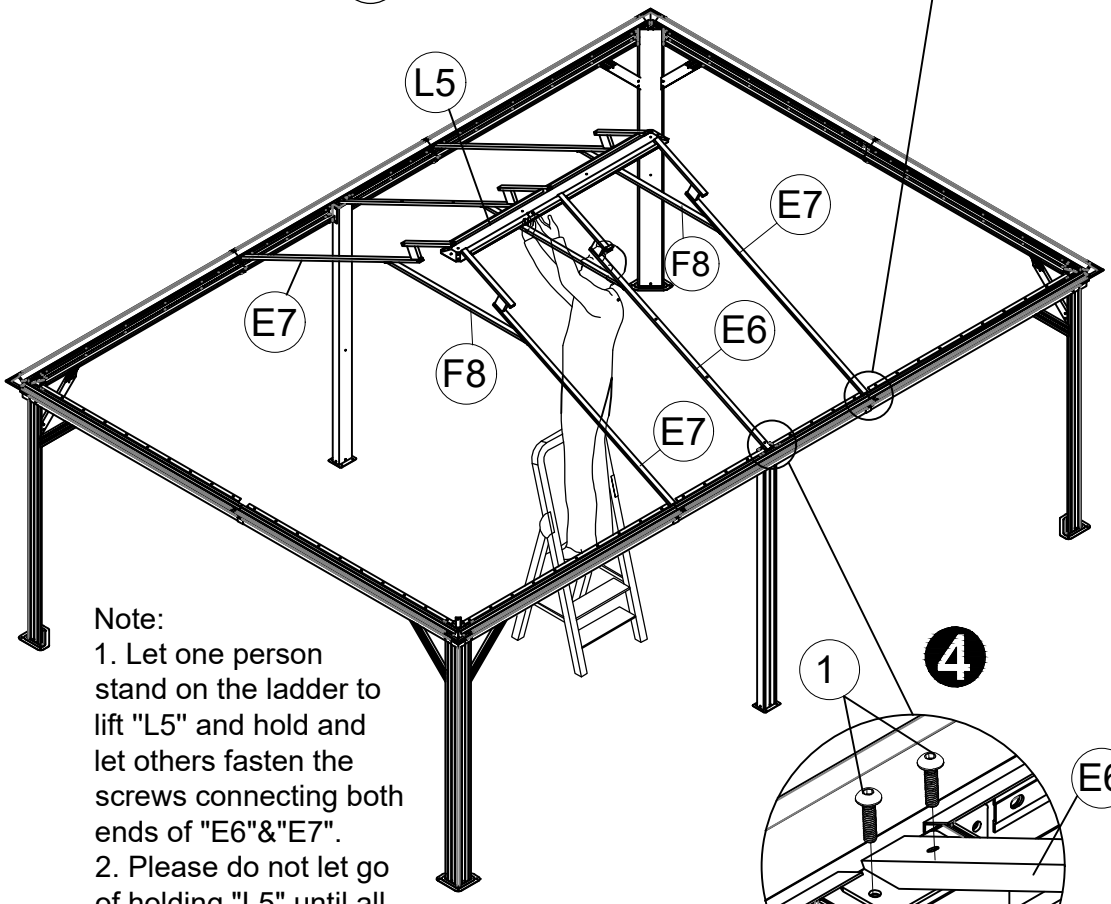

Note:
1. Let one person stand on the ladder to lift "L5" and hold and let others fasten the screws connecting both ends of "E6"&"E7".
2. Please do not let go of holding "L5" until all the "E6"&"E7" screws are installed.

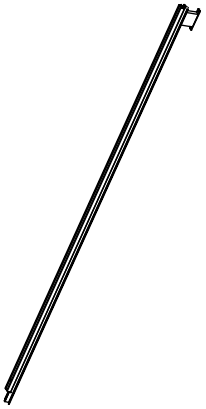

E4 4x



E5 4x



E8 2x



M6x15

1 26x

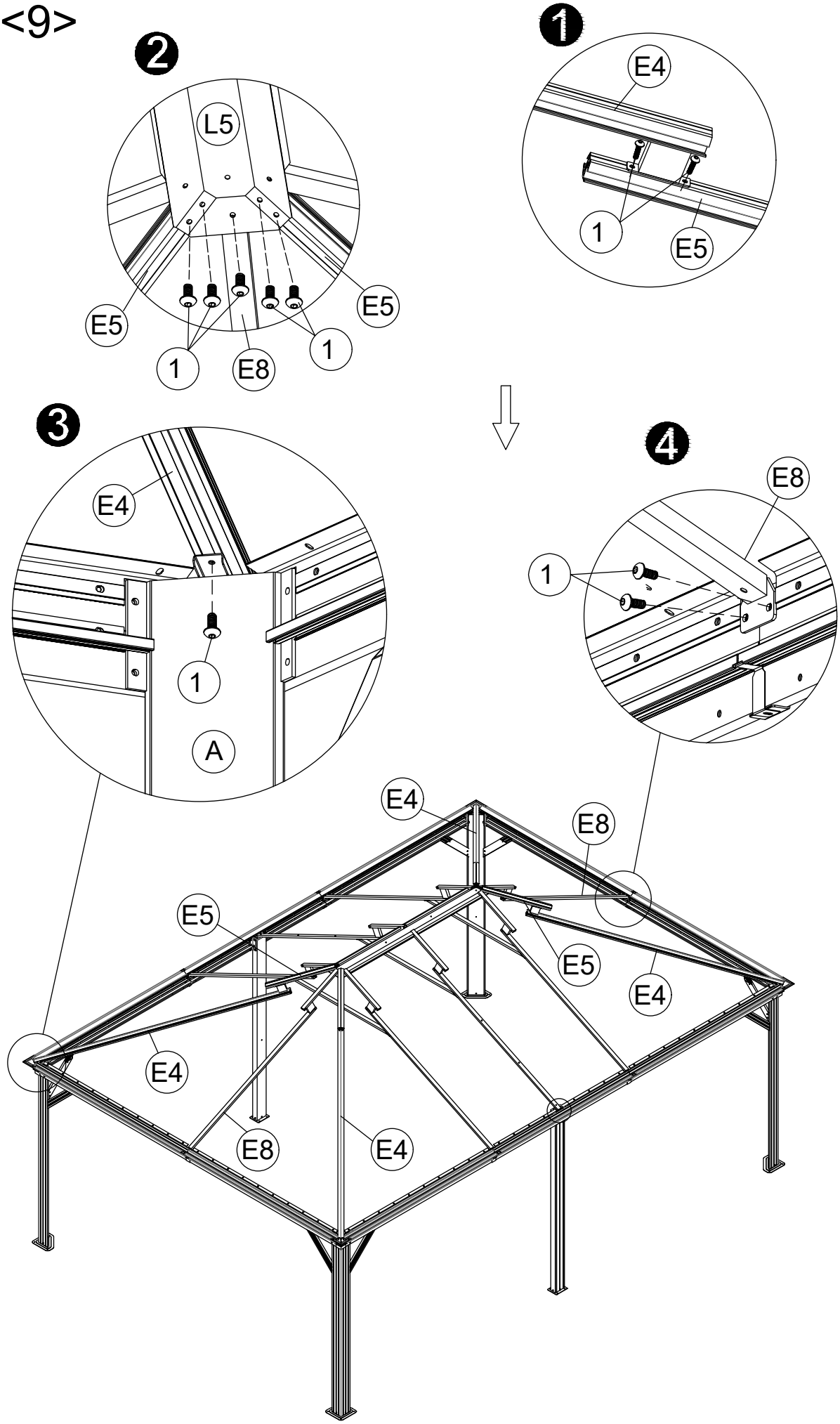

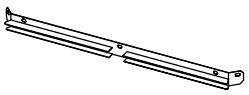

I1 2x

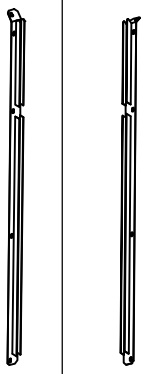

I7 2x

I8 2x



N 4x



M6x15

1 12x



5 3x

<10>

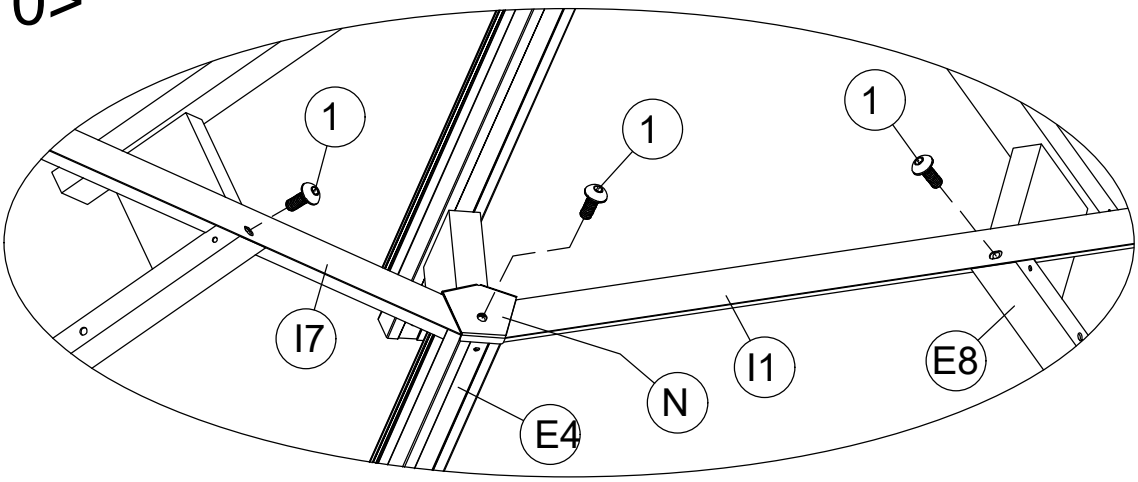

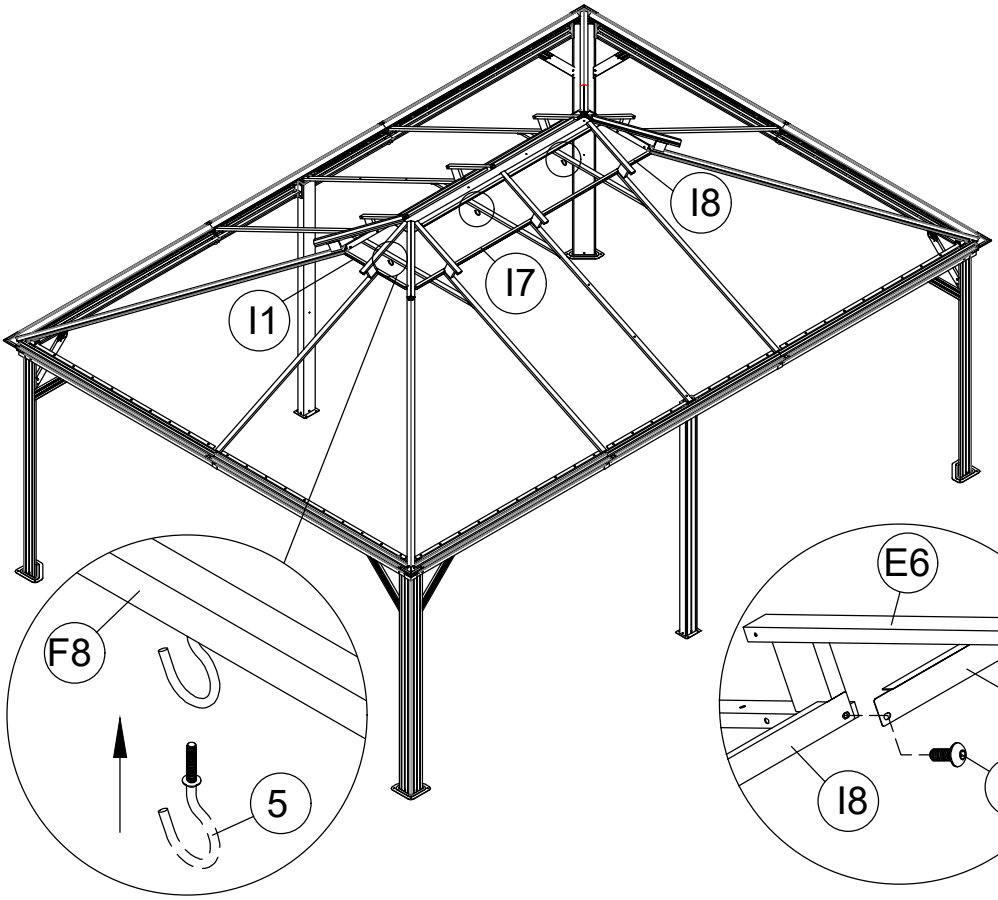

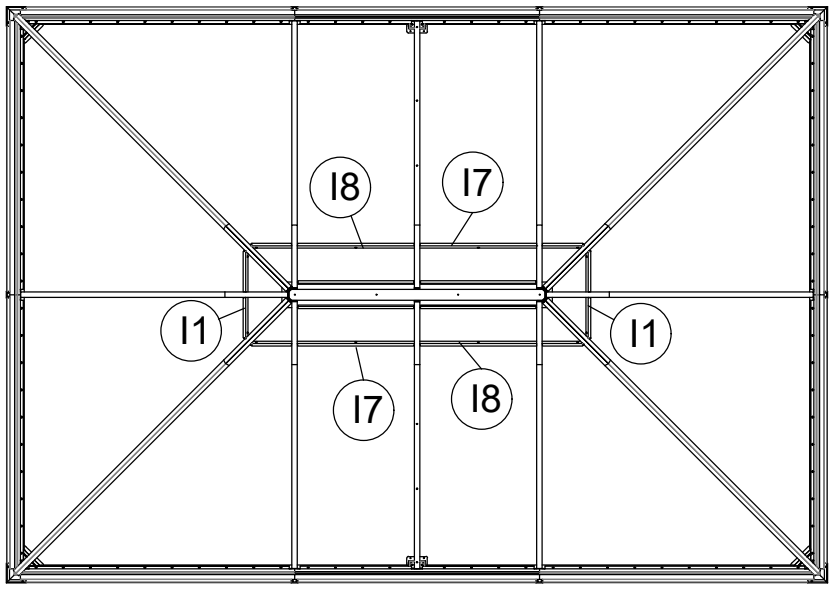

<11>

G1 2x

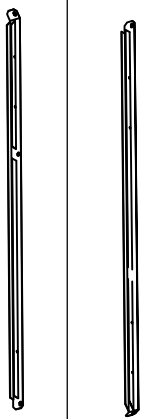

G7 2x

G8 2x



N 4x



N1 2x



M6x15

1 12x

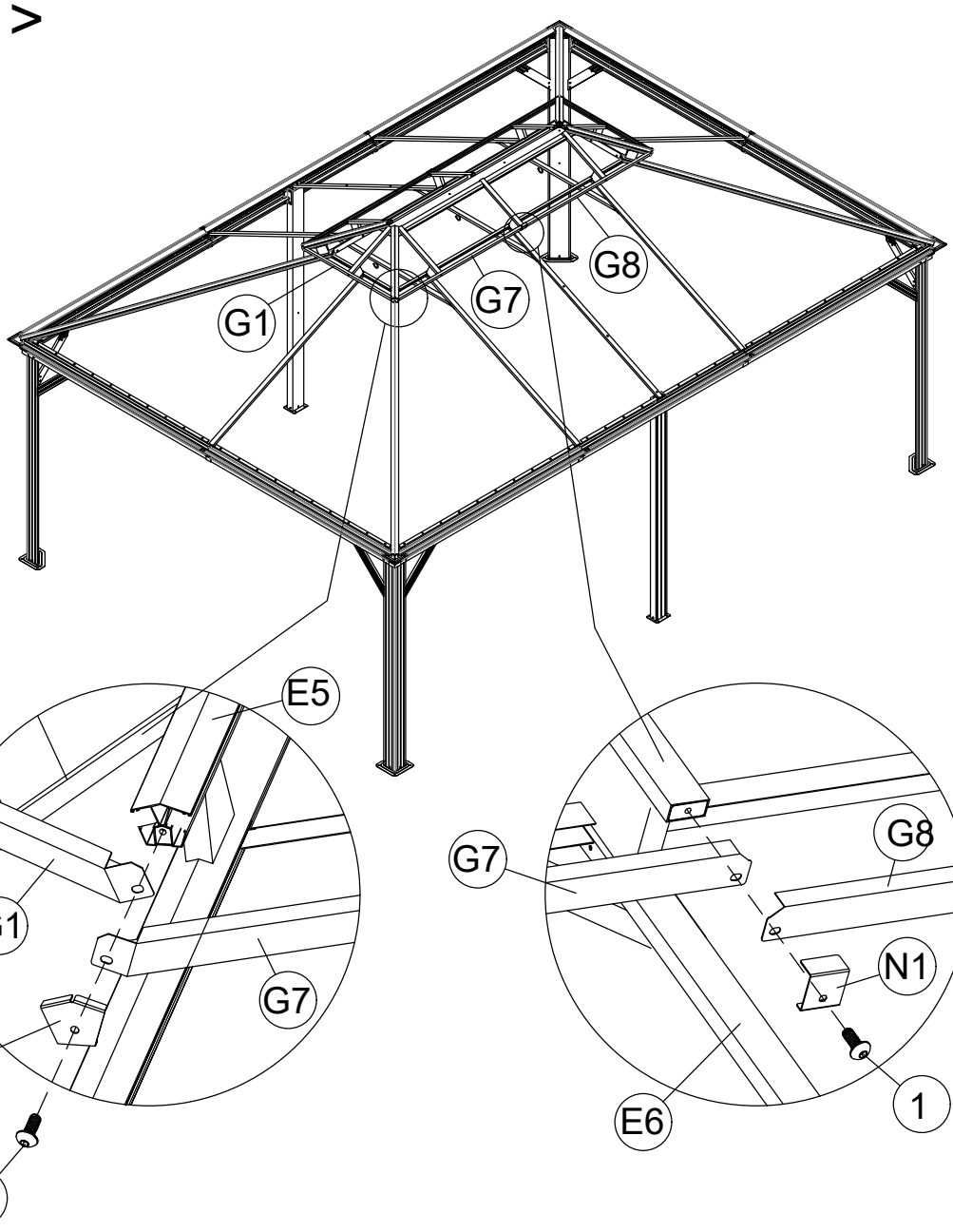

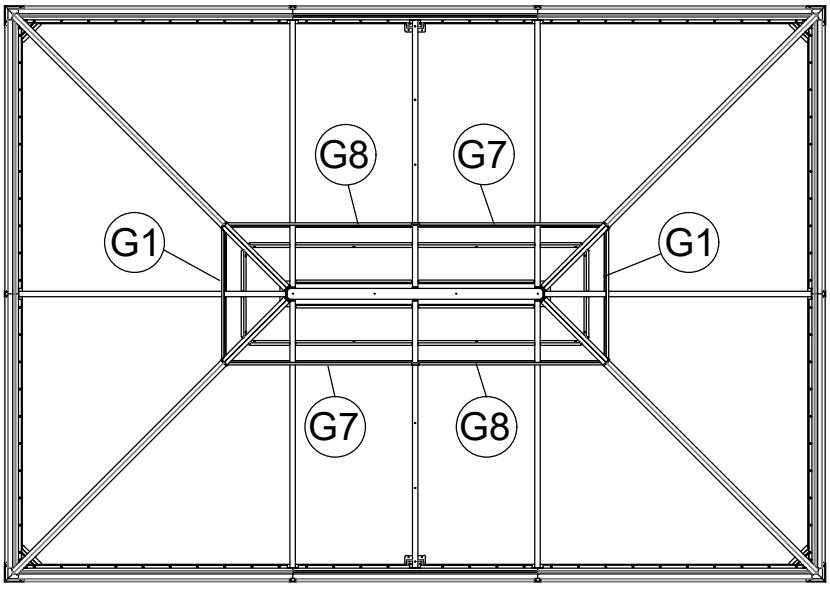

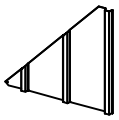

S1 2x

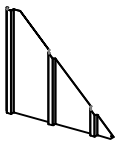

S2 2x

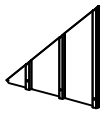

R1 2x

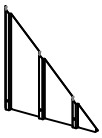

R2 2x



R3 2x



R4 2x

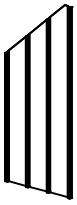

P5 2x



P6 2x



P9 2x

<12>

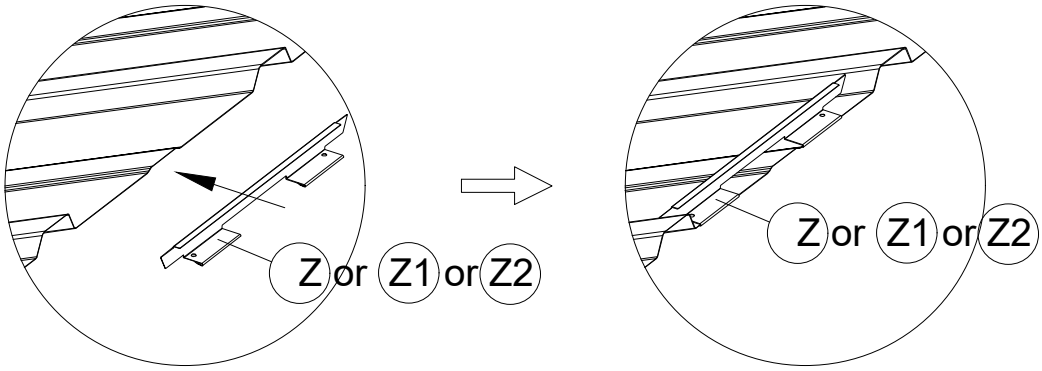

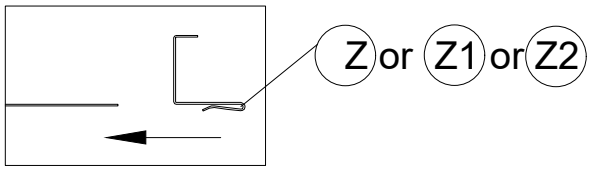

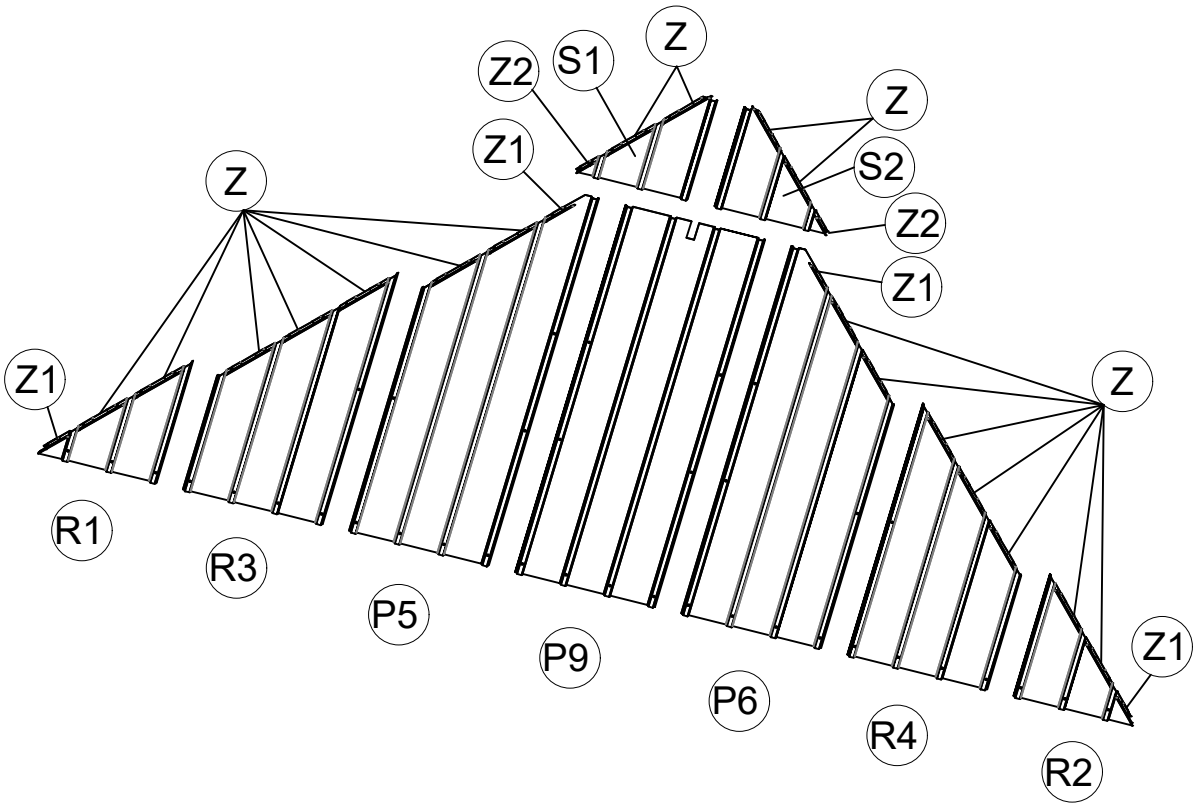

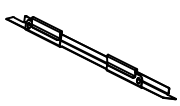

Z 36x

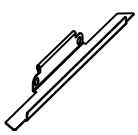

Z1 8x

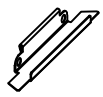

Z2 4x

R1 2x

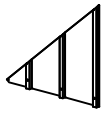

R2 2x

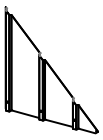

R3 2x

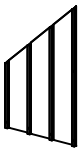

R4 2x



P5 2x

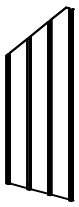

P6 2x



P7 2x

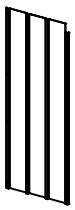

P8 2x



P9 4x

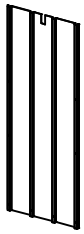

17

<13>

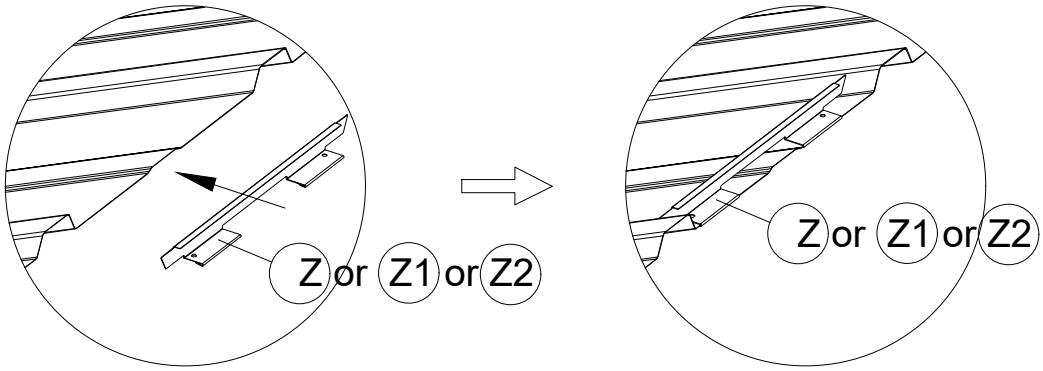

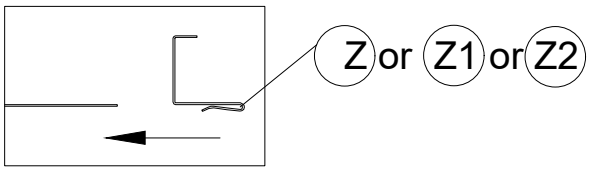

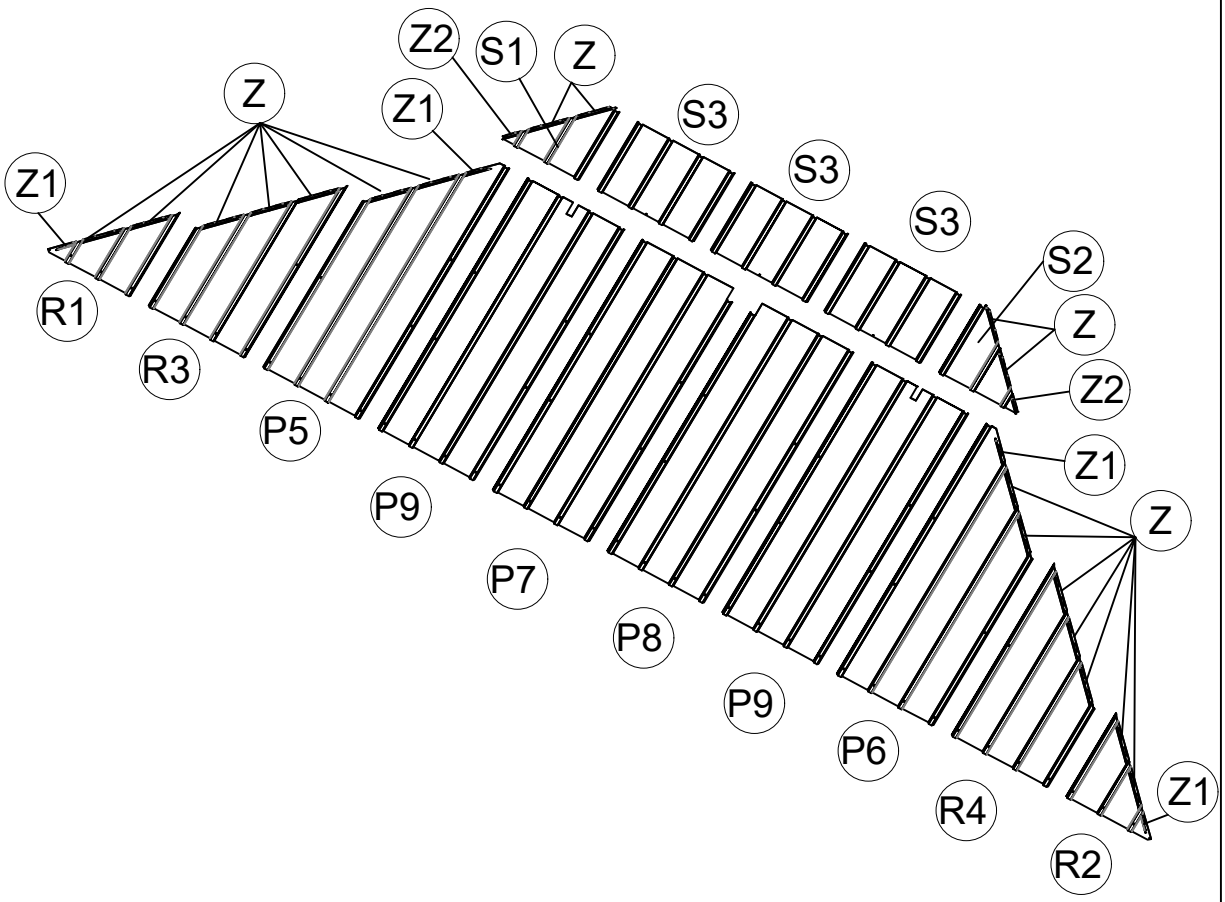

S1 2x

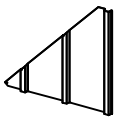

S2 2x

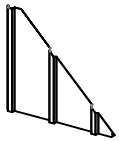

S3 6x

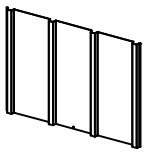

Z 36x

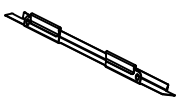

Z1 8x

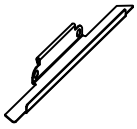

Z2 4x

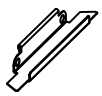

<14>

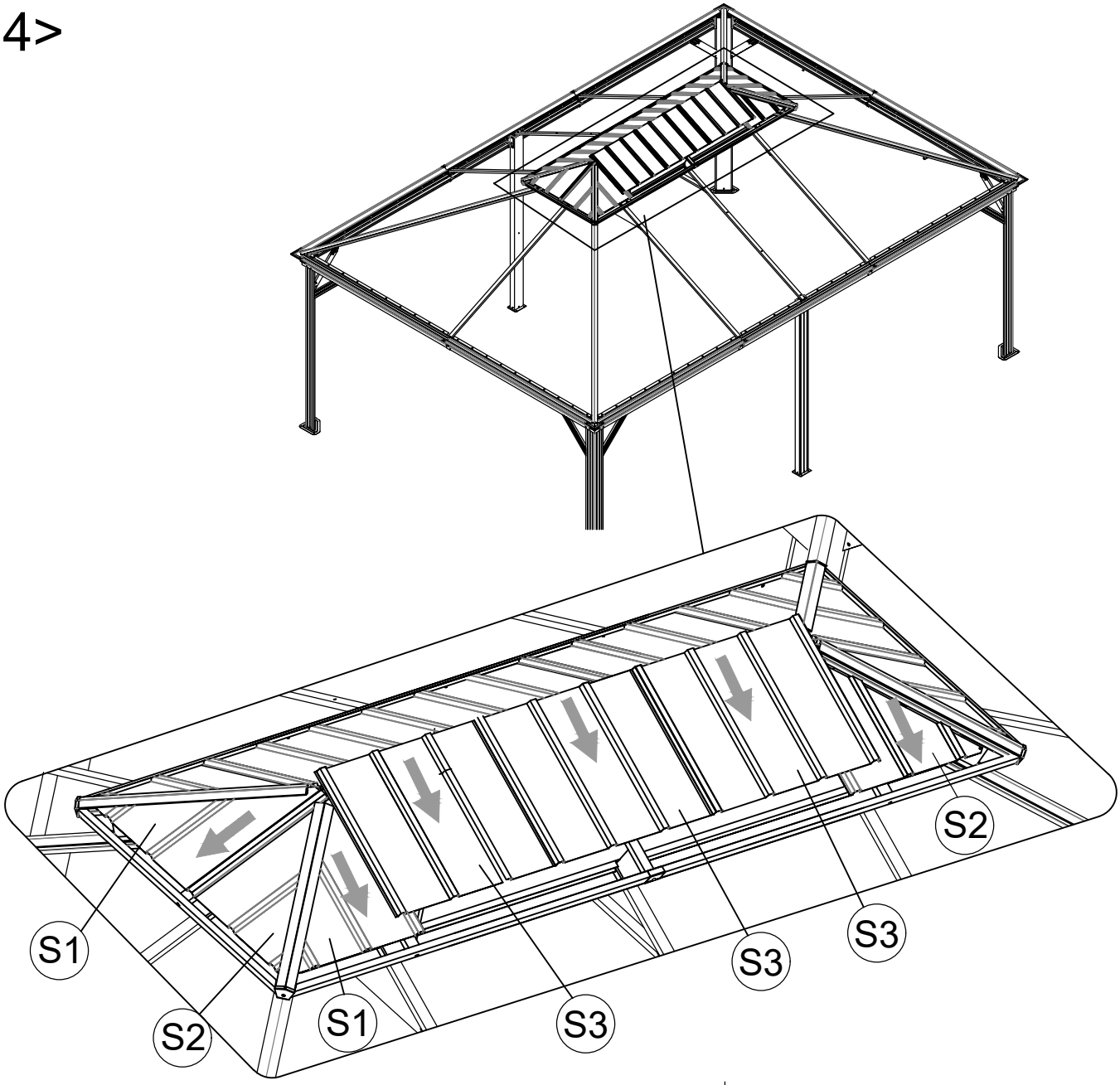

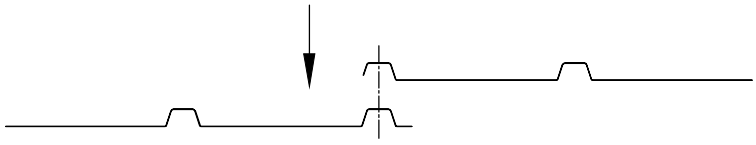

When installing the Roof plates (S2) onto short side, pls detach the right end of Roof Rib(G1) first. And then install the right end of Roof Rib (G1) again after S2 is installed.

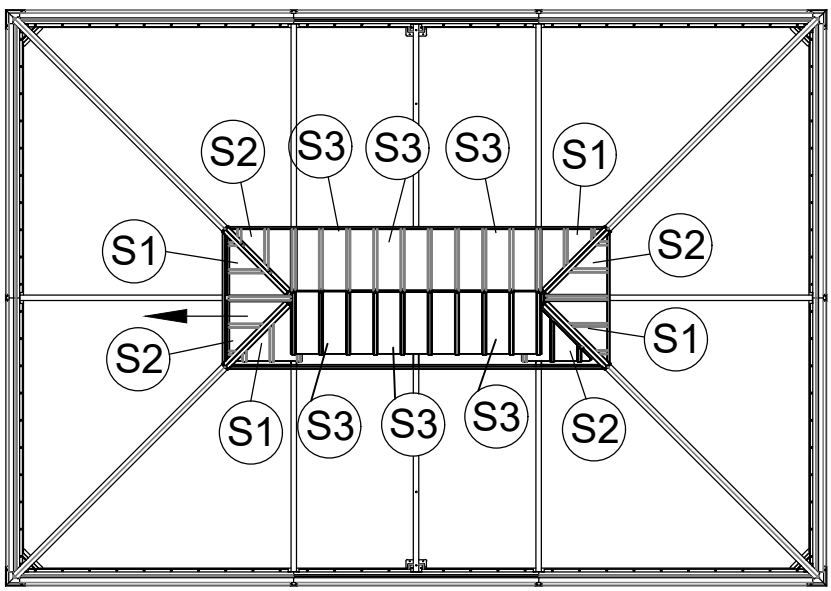

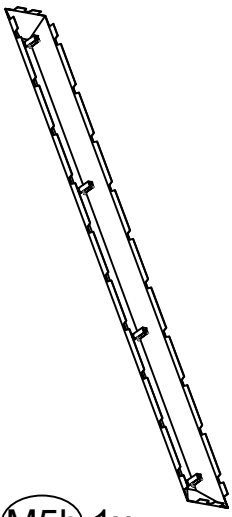

M5b 1x



M6x15

1 6x



Za 2x

<15>

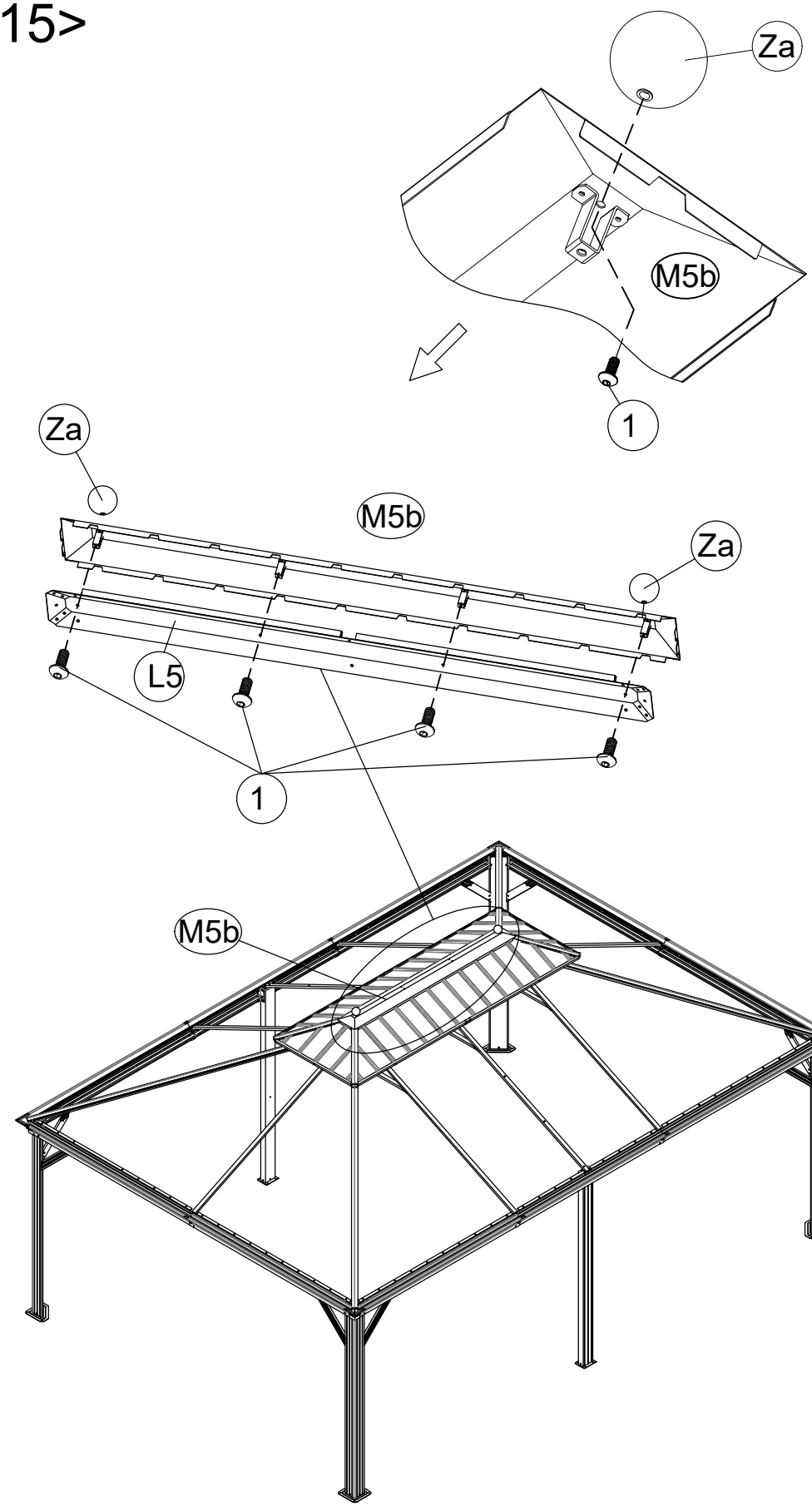

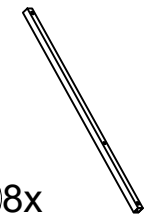

F4 8x

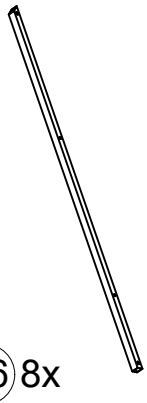

F6 8x

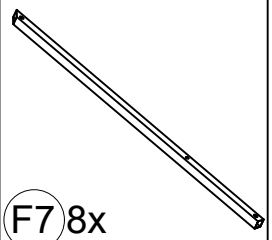

F7 8x



W 8x

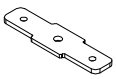

W1 16x



M6x15

1 72x

20

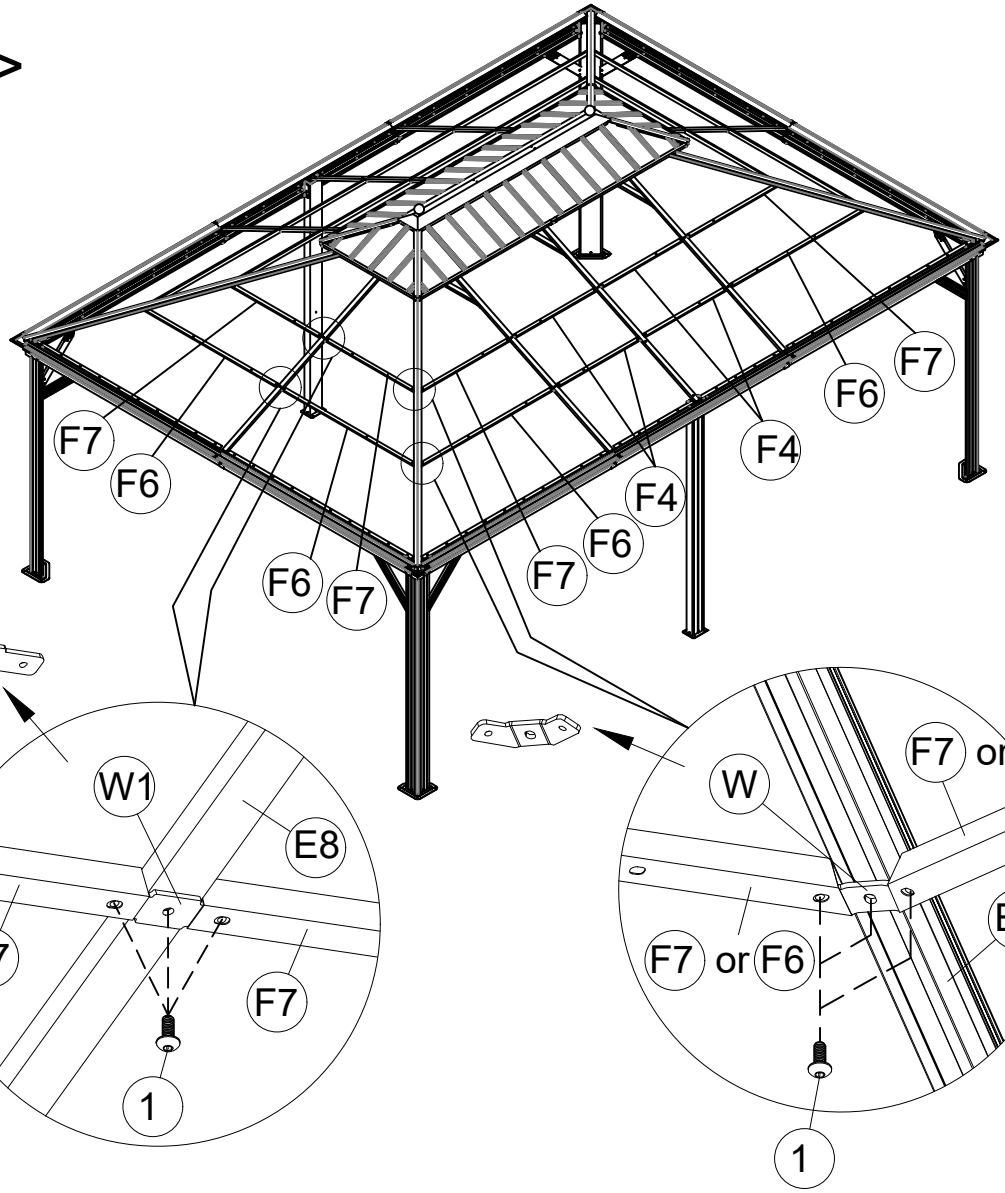

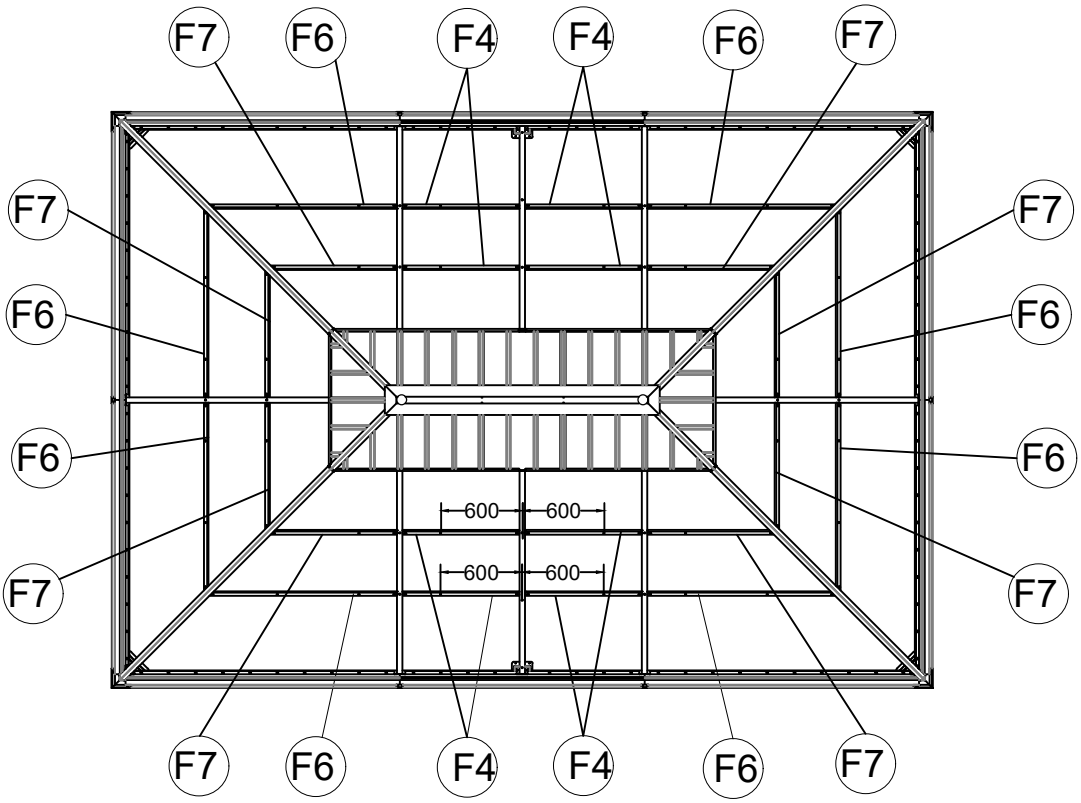

<17>

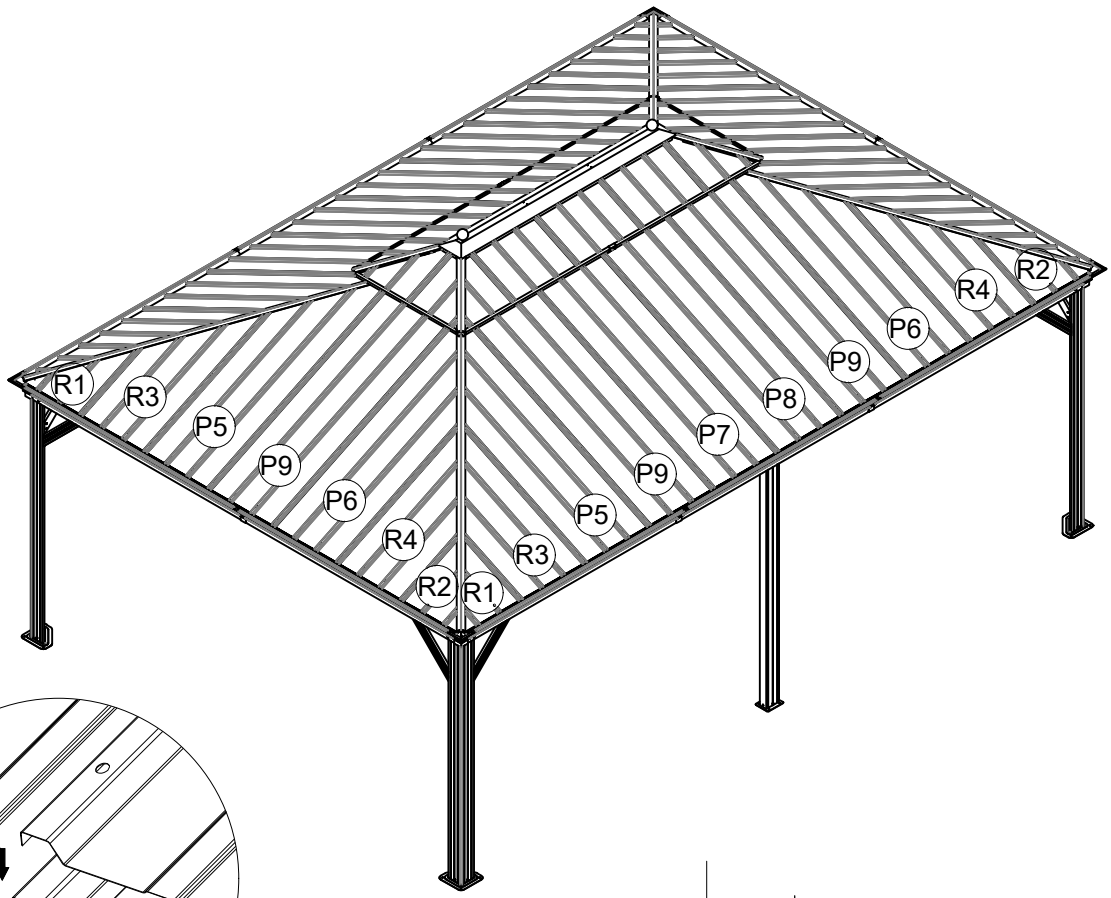
R1
R3
P5
P9
P6
R4
R2
R1
R3
P5
P9
P7
P8
P9
P6
R4
R2

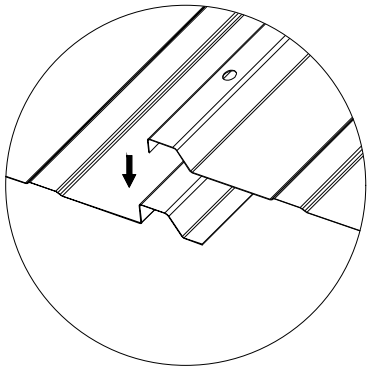

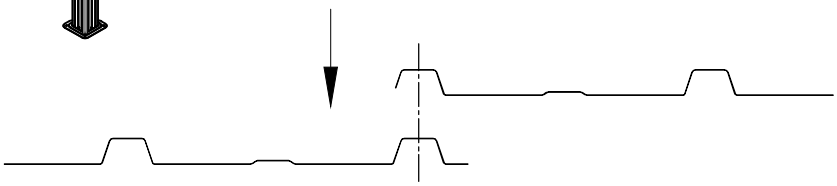

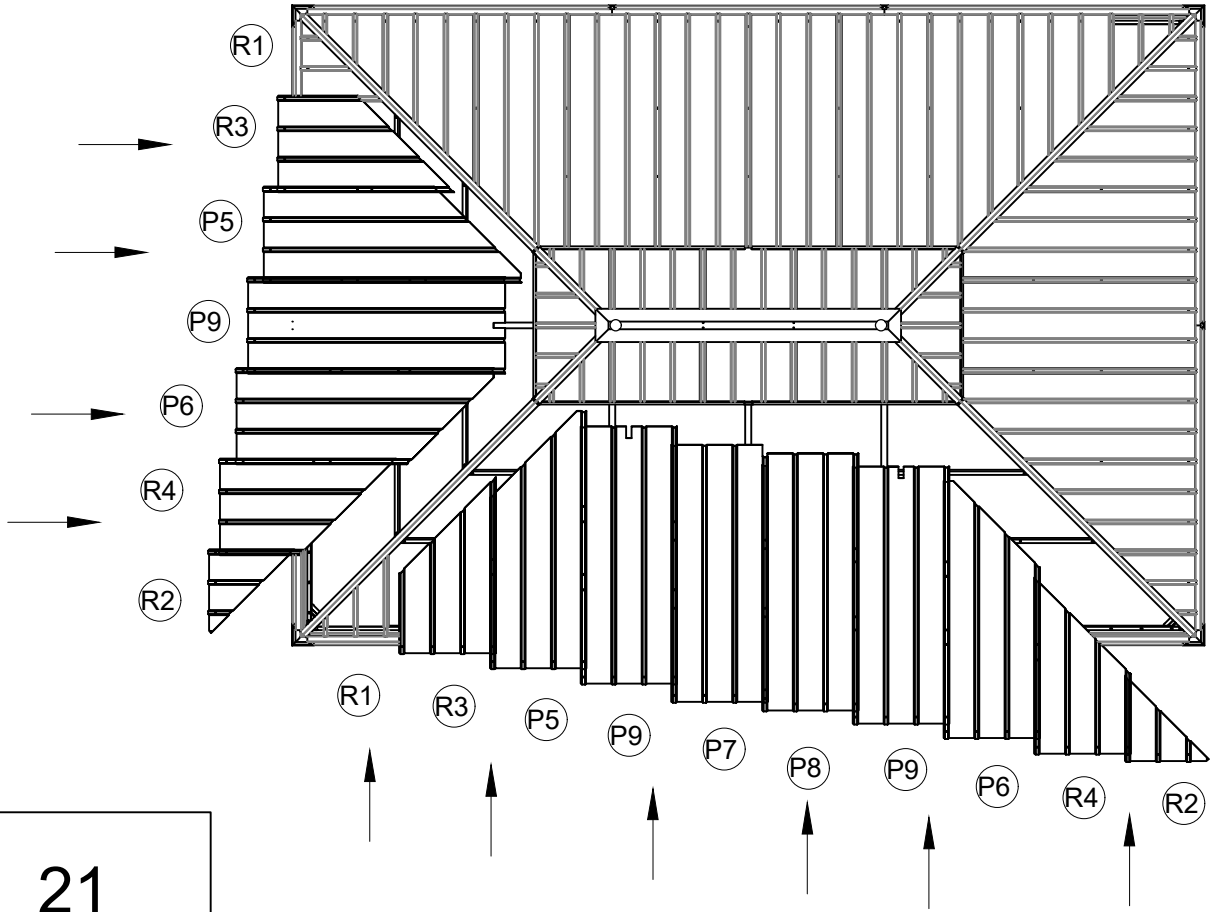
R1
R3
P5
P9
P6
R4
R2
R1
R3
P5
P9
P7
P8
P9
P6
R4
R2

<18>

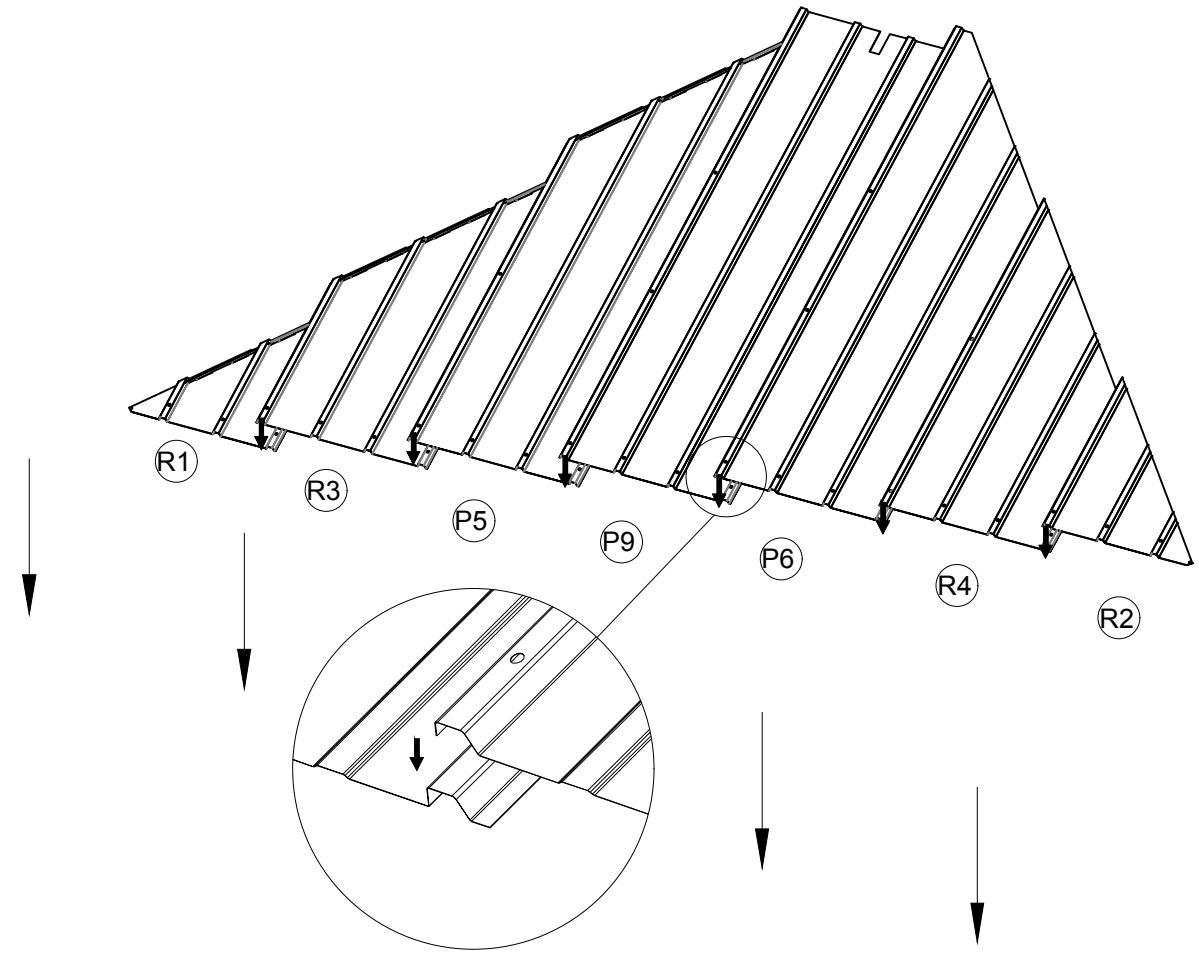

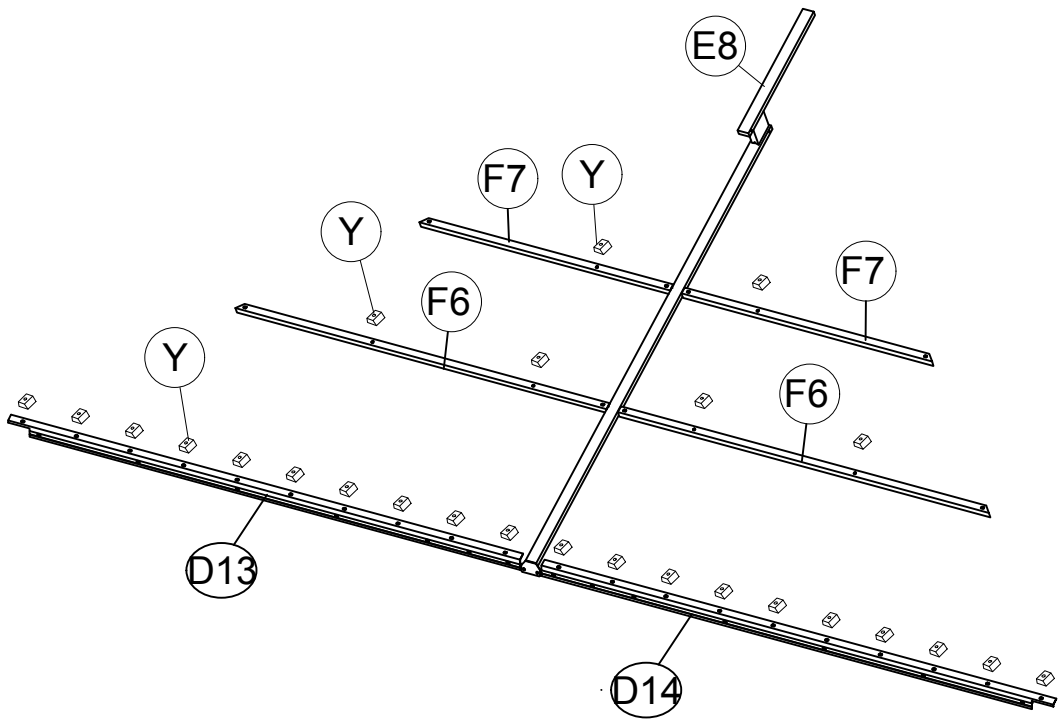

<19>

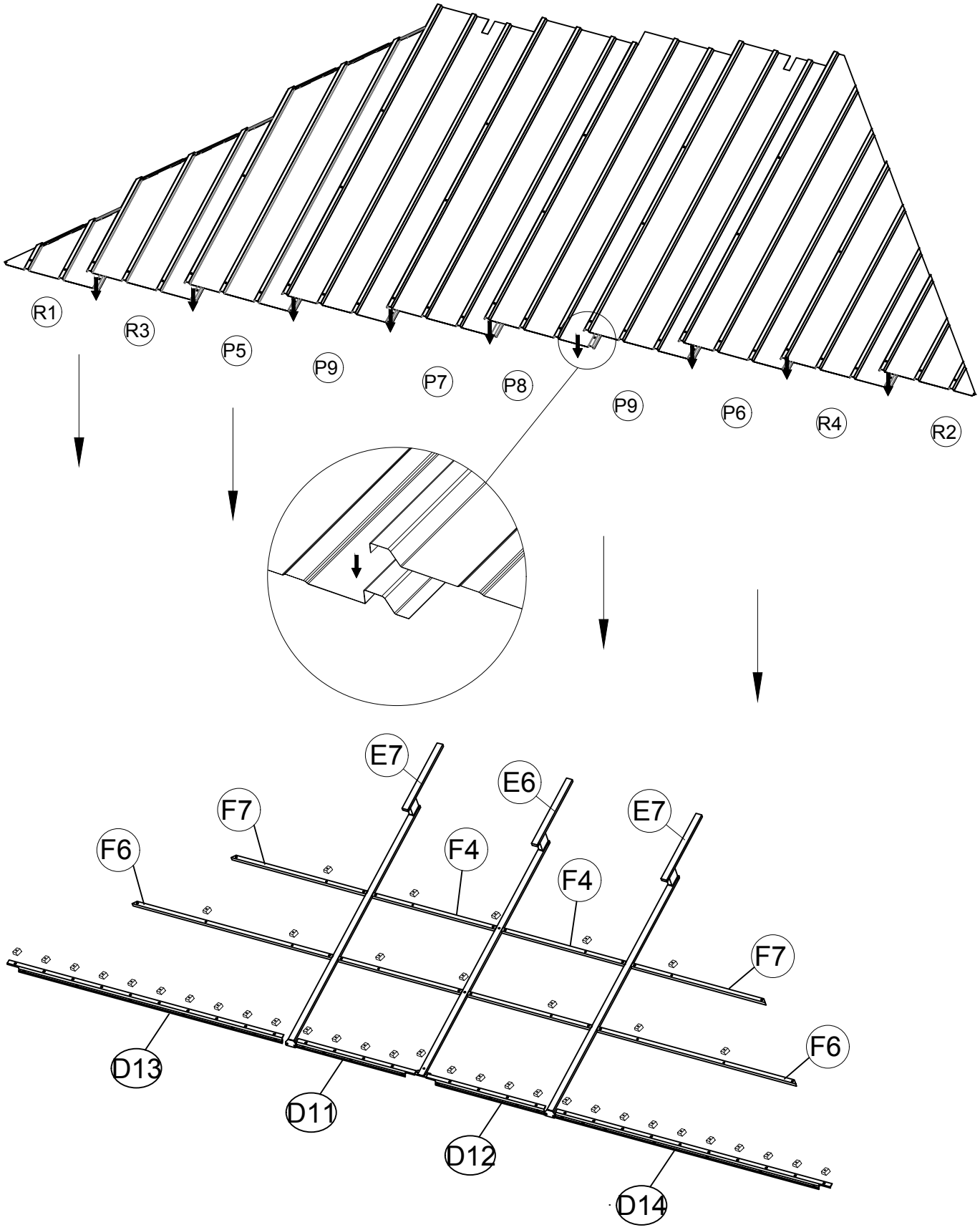
R1
R3
P5
P9
P7
P8
P9
P6
R4
R2
E7
E6
E7
F7
F6
F4
F4
F7
F6
D13
D11
D12
D14

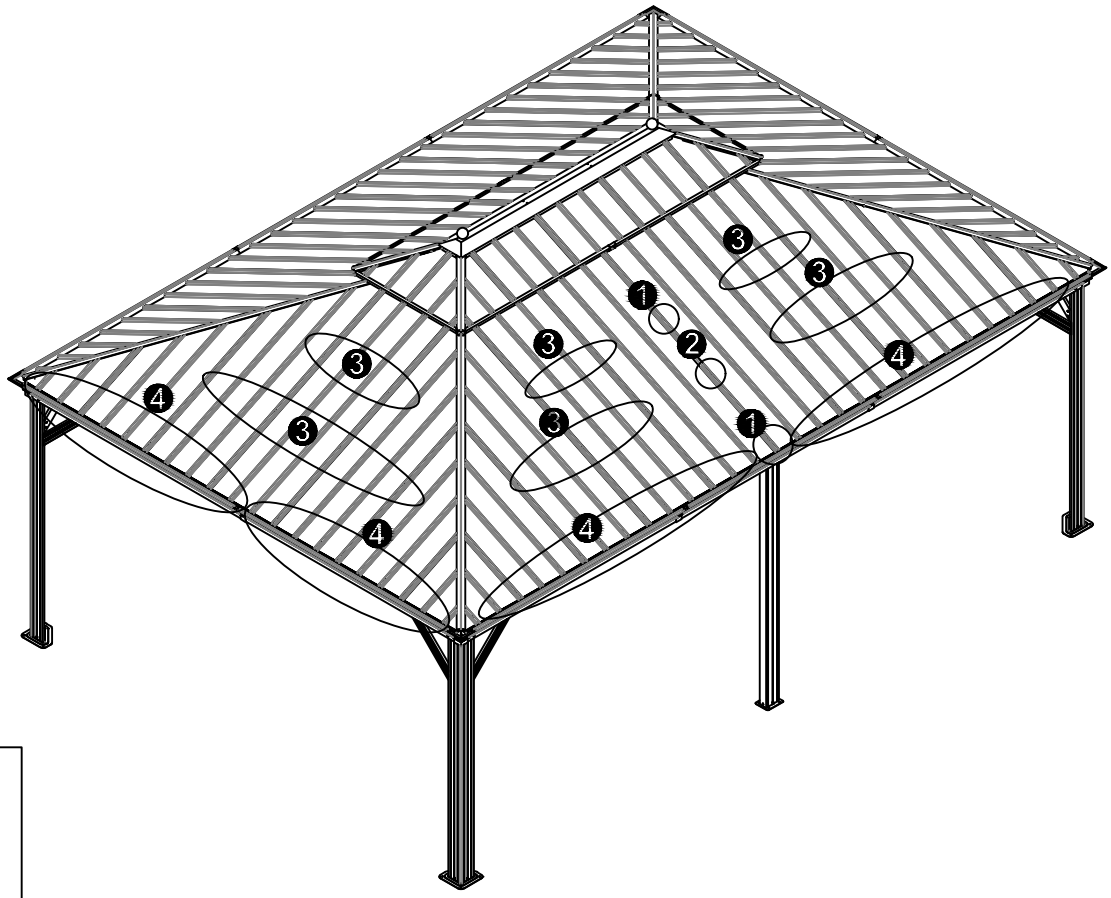

 Y	134x
 M6x25 3	2x
 M6x23 2	96x
 M6x42 6	4x
 M6x47 7	32x
24	

Note: When installing the roof top plates,if the roof plates are slightly uneven, pls press the screws from the top of the plates until the bottom screw thread is exposed by 3 to 4mm, and then screw on the nut.

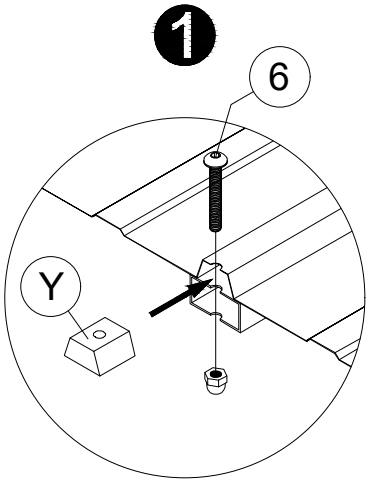

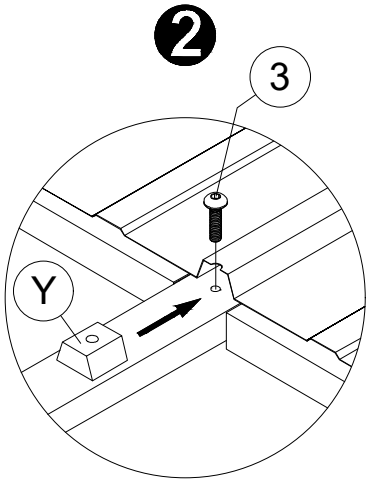

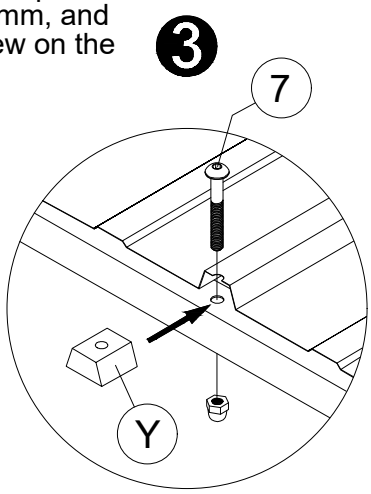

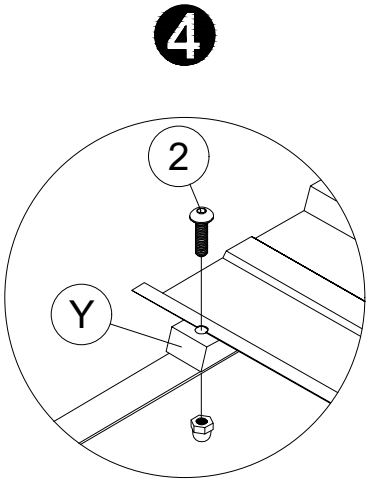

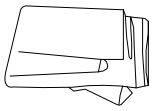

T 4x + 2x

<21>

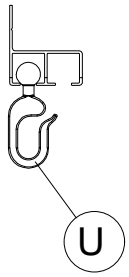

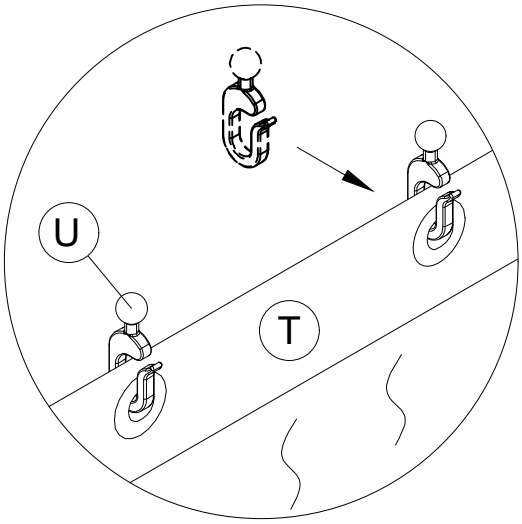

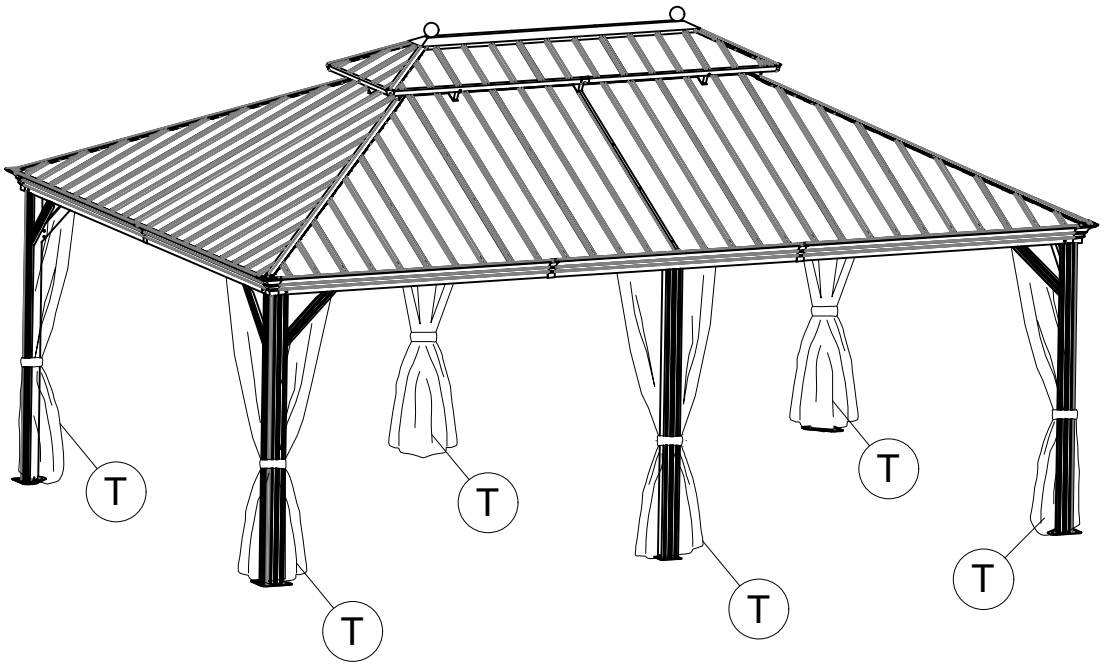

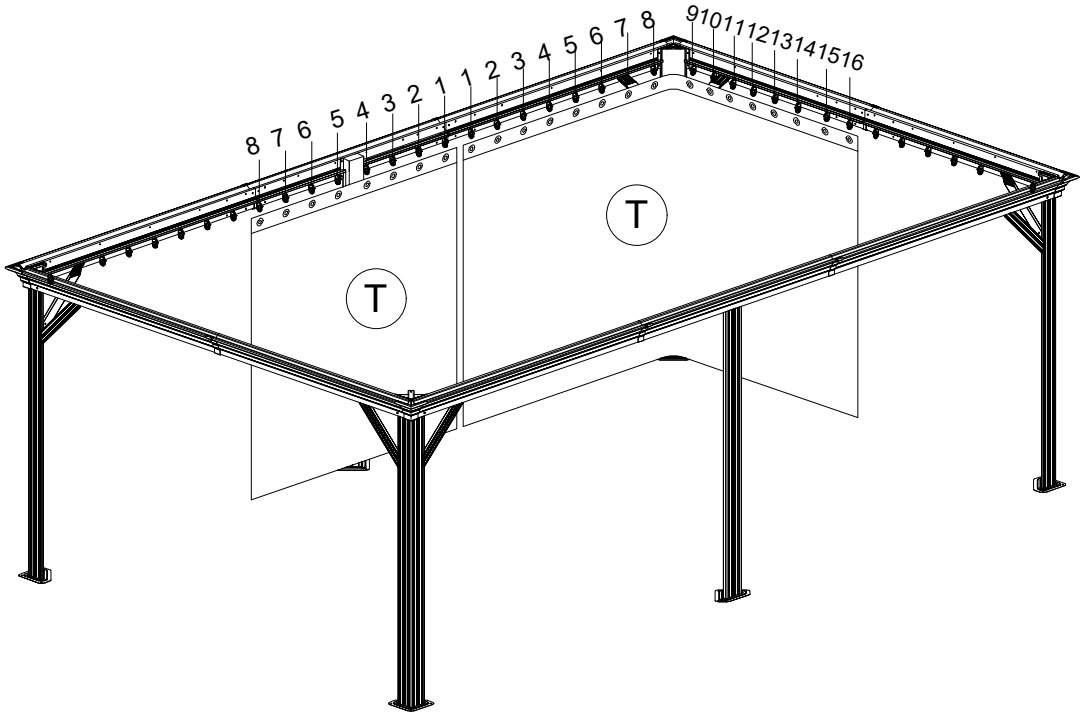

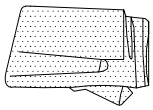

T1 4x + 2x

<22>

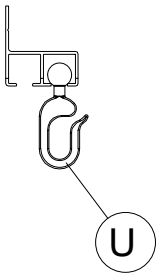

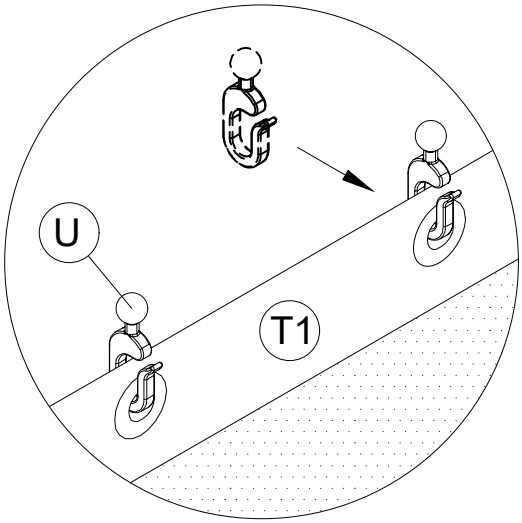

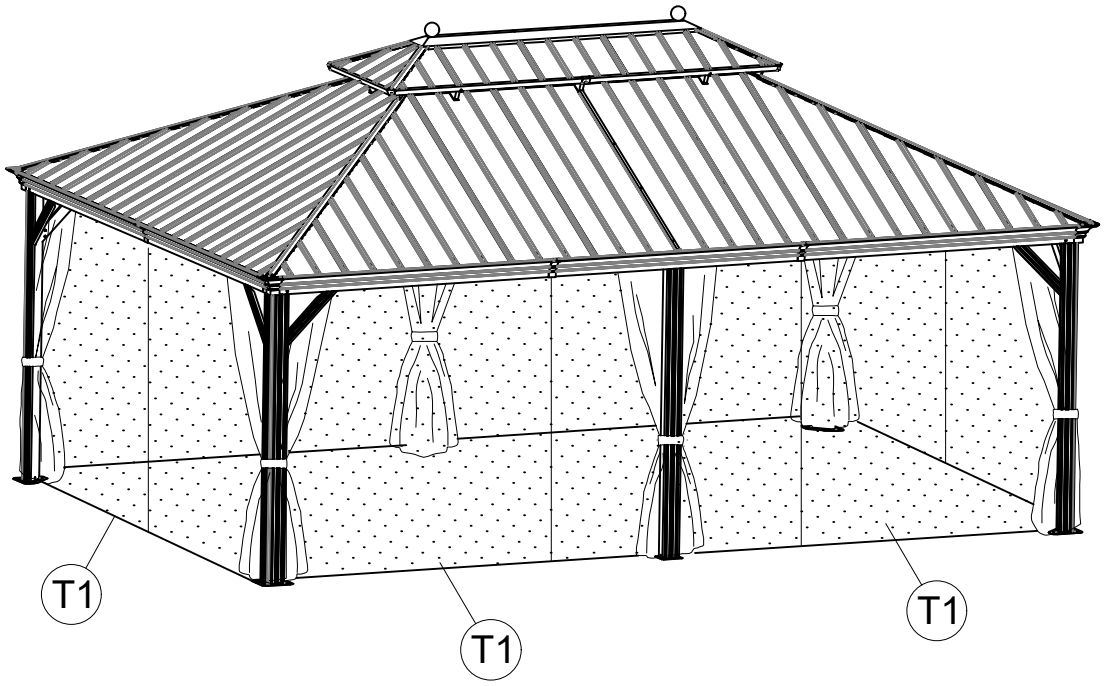

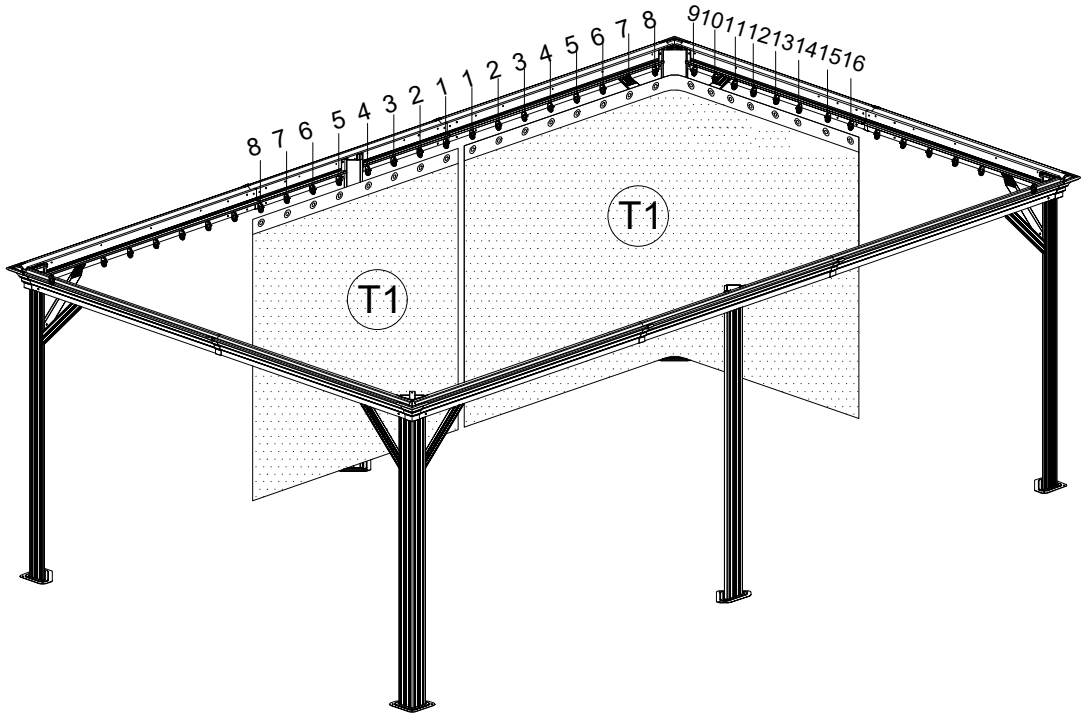

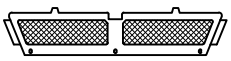

V1 2x

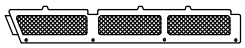

V5a 2X

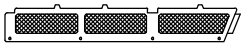

V5b 2x



M6x10

9 12x

<23>

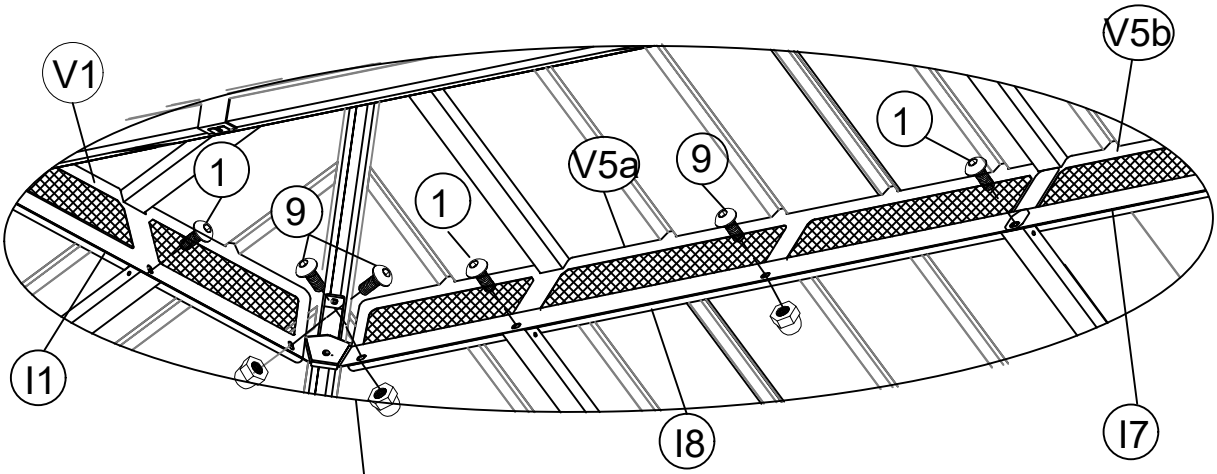

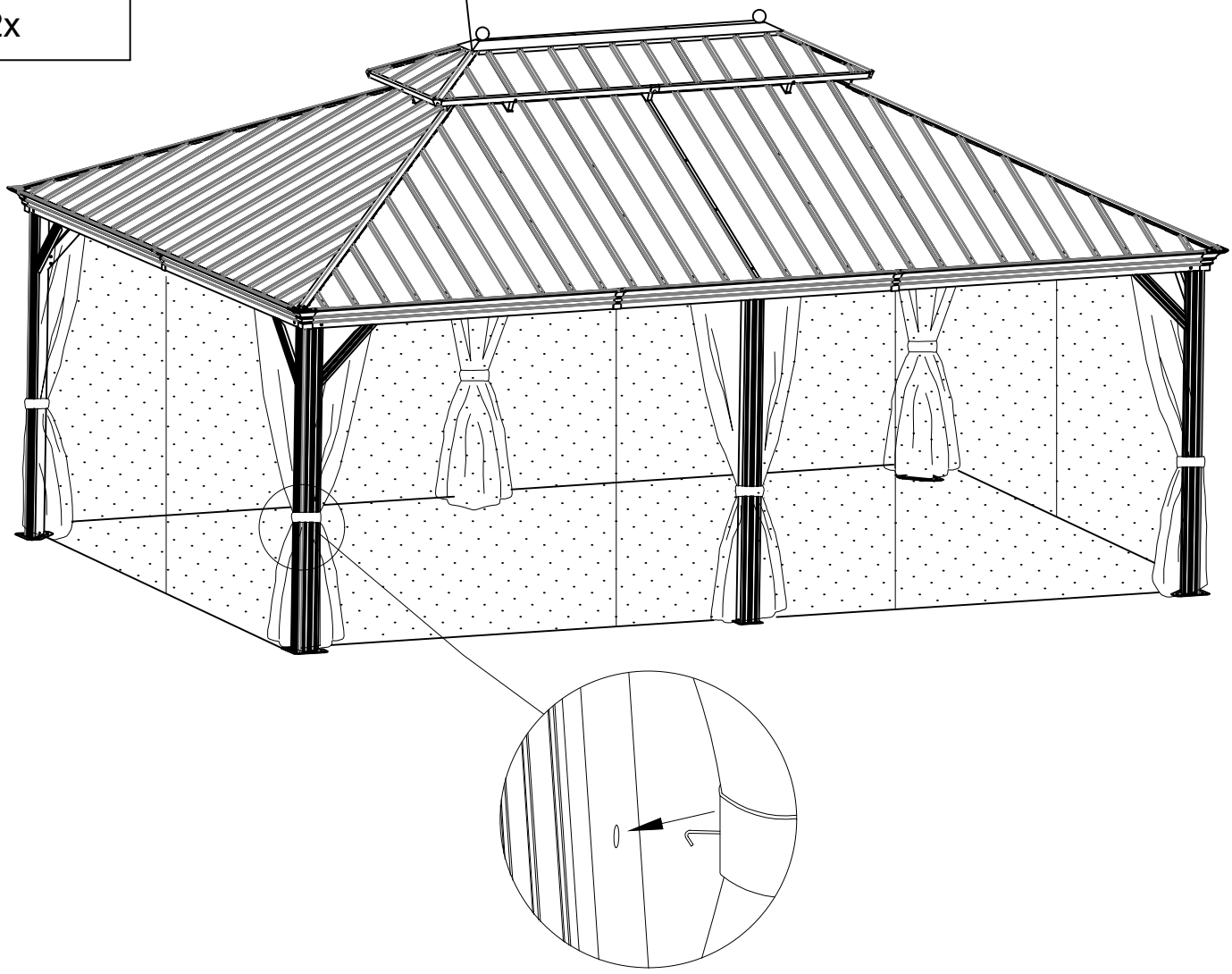

Carton-1/6	
Part	Qty
A	4
A1	2
E5	4
F6	8
F8	3

Carton-2/6	
Part	Qty
B11	4
B12	4
C3	4
C4	4
D13	4
D14	4
V1	2
V5a	2
V5b	2

Carton-3/6	
Part	Qty
E4	4
E6	2
E7	4
E8	2
F4	8
F7	8
H	4

Carton-3/6	
Part	Qty
H1	4
D11	2
D12	2
J	4
P	6
Z	72
Z1	16
Z2	8

Carton-4/6	
Part	Qty
B8	2
L5	1
M5b	1
C11	2
C12	2
G1	2
G7	2
G8	2
I1	2
I7	2
I8	2
J1	2
K	4
K1	6
N	8
N1	2
V	6

Carton-4/6	
Part	Qty
W	8
W1	16
W3	8
W4	8
W5	4
Y	134
U	160
T	4 + 2
T1	4 + 2
1.2.3.4.5.6.7.8. 9.10.12.14.15	1
Za	2

Carton-5/6	
Part	Qty
P5	4
P6	4
P7	2
P8	2
R1	4
R2	4

Carton-6/6	
Part	Qty
P9	6
R3	4
R4	4
S1	4
S2	4
S3	6