Assembly Installation Instructions

CAUTION: Read instructions carefully and turn off the electricity to the circuit you're working on at the main electrical panel before beginning installation. Never attempt to work on live wires. We suggest the lighting fixture needs to be installed by a licensed electrician

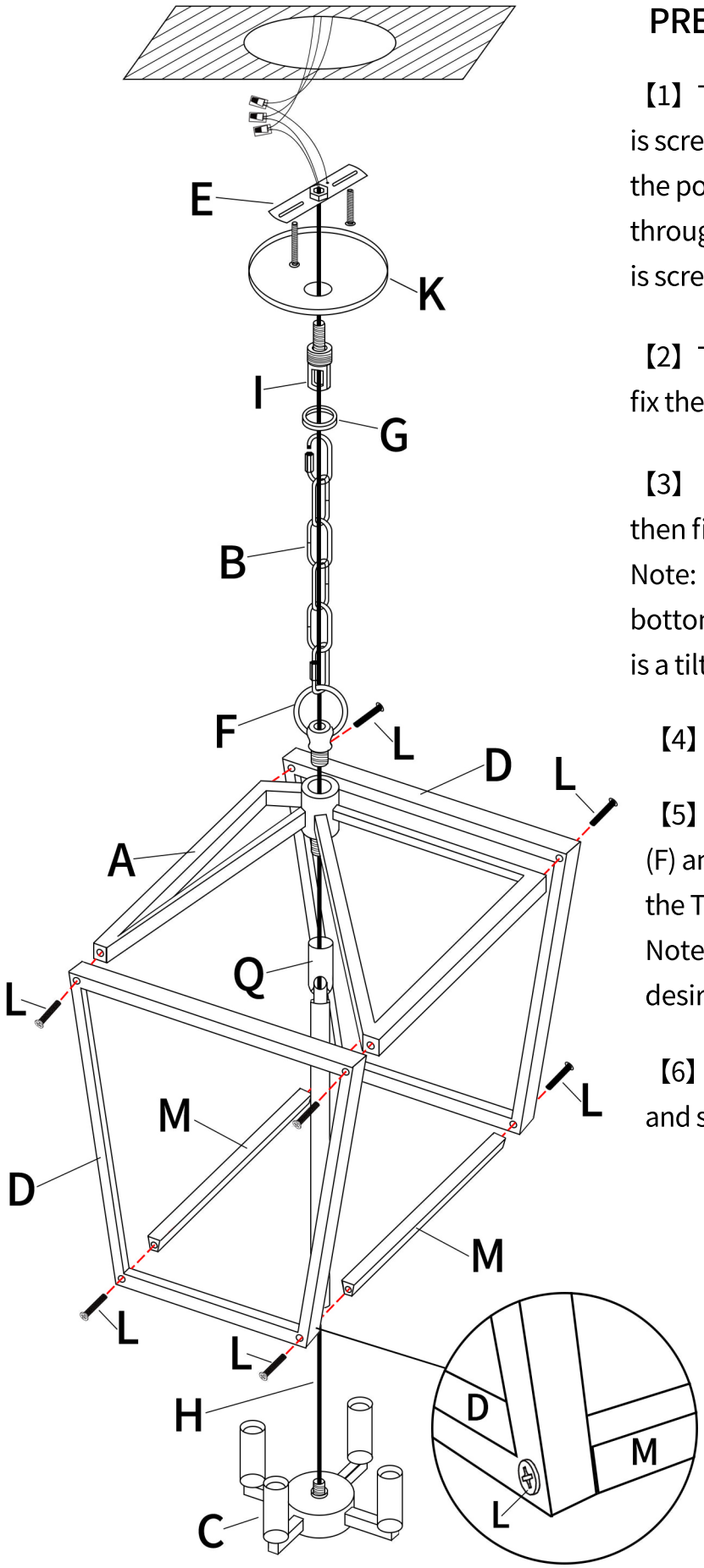

PREPARING FOR INSTALLATION (Step1)

【1】The center connector of the top fixture frame (A) is screwed together with the middle tube (Q), and then the power cord (H) of the bulb base set (C) is passed through the middle tube (Q), and the bulb base set (C) is screwed together with the middle tube (Q).

【2】Top fixture frame (A) connect (D) frame, and then fix them tightly, with screws (L).

【3】 2 tubes (M) connect (D) the bottom of the frame, then fix them tightly with screws (L).
Note: Before tightening the screws, the angle of the bottom bevel of M and D should be balanced, if there is a tilt, you need to re-align the bevel.

【4】Fix the hanging plate (E) on the ceiling.

【5】Tighten the power cord (H) through the inner ring (F) and the canopy (K), and tighten the inner ring (F) on the Top fixture frame (A)
Note: You can adjust to adjust the chain (B) to the desired length.

【6】 Align the canopy (K) with the canopy connector (I) and secure it with the inner ring (G).