Bookcase Room Divider

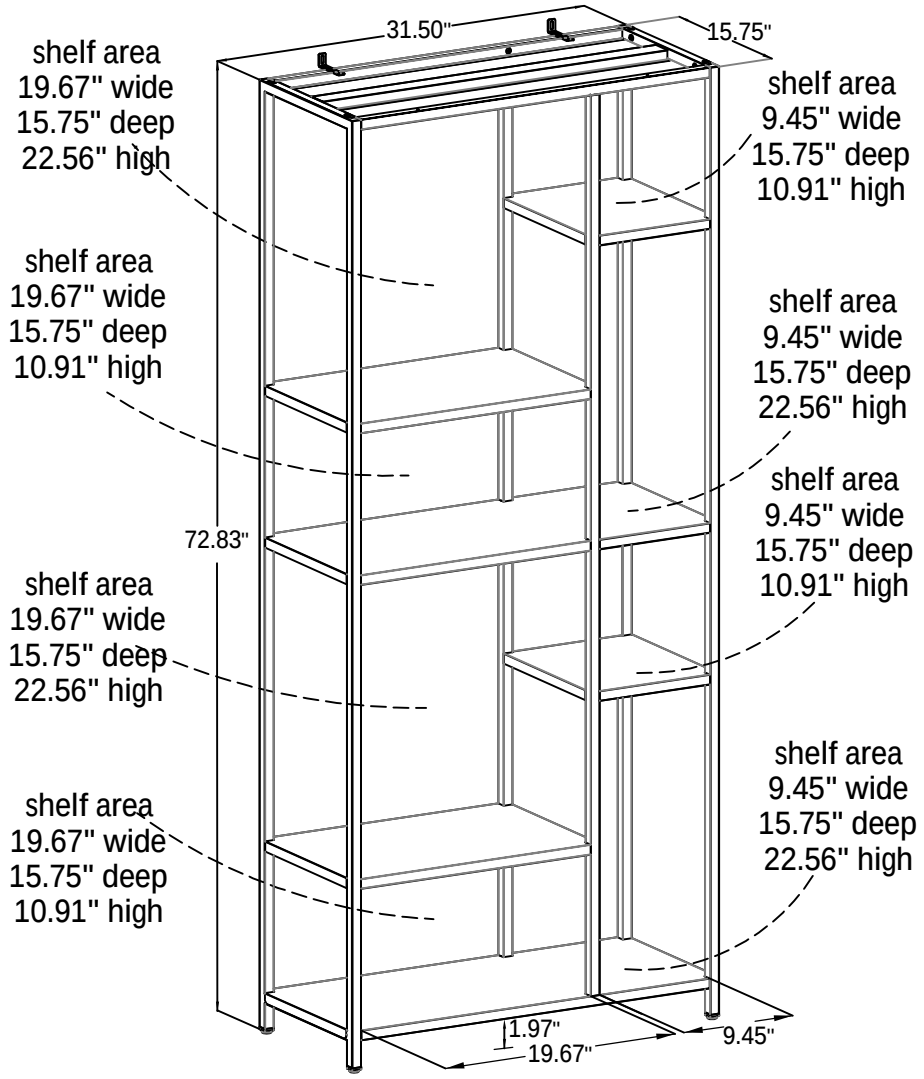

Overall Product Size:
31.50"W x 15.75"D x 72.83"H
80cm W x 40cm D x185cm H

Total Storage:17.78cubic feet

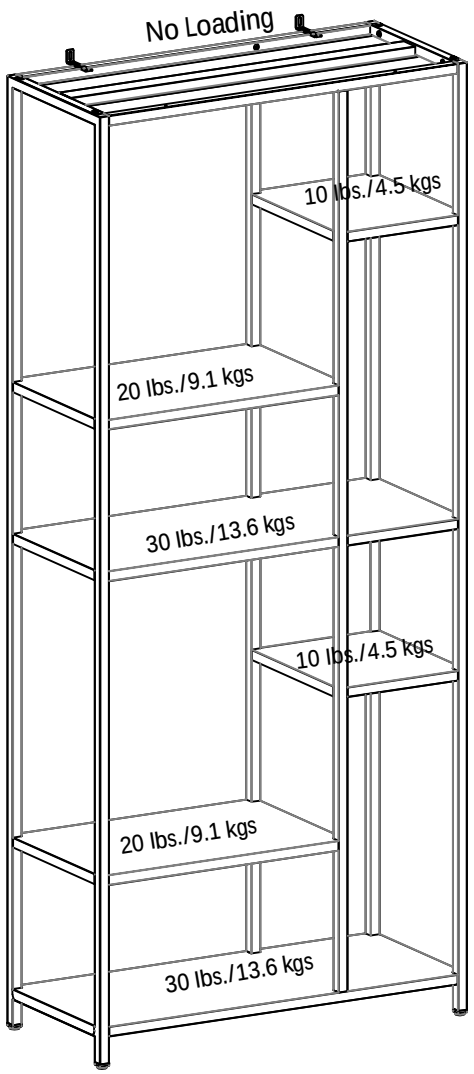

Maximum Weight Capacities
Unit Weight: 44 lbs (20 kg)