ASSEMBLY INSTRUCTIONS

Before you begin, please follow assembly instructions carefully, then follow them step by step.

Read instruction carefully . See Furniture Parts list and Hardware List for guidance . Be sure you have all parts before you start assembling .
Place and assemble furniture on a clean flat soft surface , such as carpet or rug to pervent being scratched .

	PART LIST	QTY
1	TOP PANEL	1 PC
2	BOTTOM PANEL	1 PC
3	SIDE PANEL (L)	1 PC
4	SIDE PANEL (R)	1 PC
5	CENTER PANEL	1 PC
6	SHELF PANEL (L)	3 PCS
7	SHELF PANEL (R)	3 PCS
8	DOOR PANEL (L)	1 PC
9	DOOR PANEL (R)	2 PCS
10	BACK PANEL	1 PC

	HARDWARE	
A	MINI FIX A1 A2 A3	6 PCS
B	M8 X 30MM WOOD DOWEL	12 PCS
C	M6 X 50MM CSK CAP WOOD SCREW	6 PCS
D	M3.5 X 16MM C.B SCREW	40 PCS
E	METAL SHELF SUPPORT	24 PCS
F	ALLEN KEY M4	1 PC
G	5/8 NAIL	31 PCS
H	5/8 HINGES	6 PCS
I	MOOD HANDLE	3 PCS
J	DRAWER STOPPER(2 PIN)	2 PCS
K	PVC ROUND LEG	4 PCS
L	M4 X 25MM C.B SCREW	6 PCS
M	TIPPING PACK M1 M2 M3 M4 M5	2 SETS

SELF-PREPARED TOOLS: Tools below are NOT included in package.	
SCREWDRIVER	HAMMER
POWER DRILL	

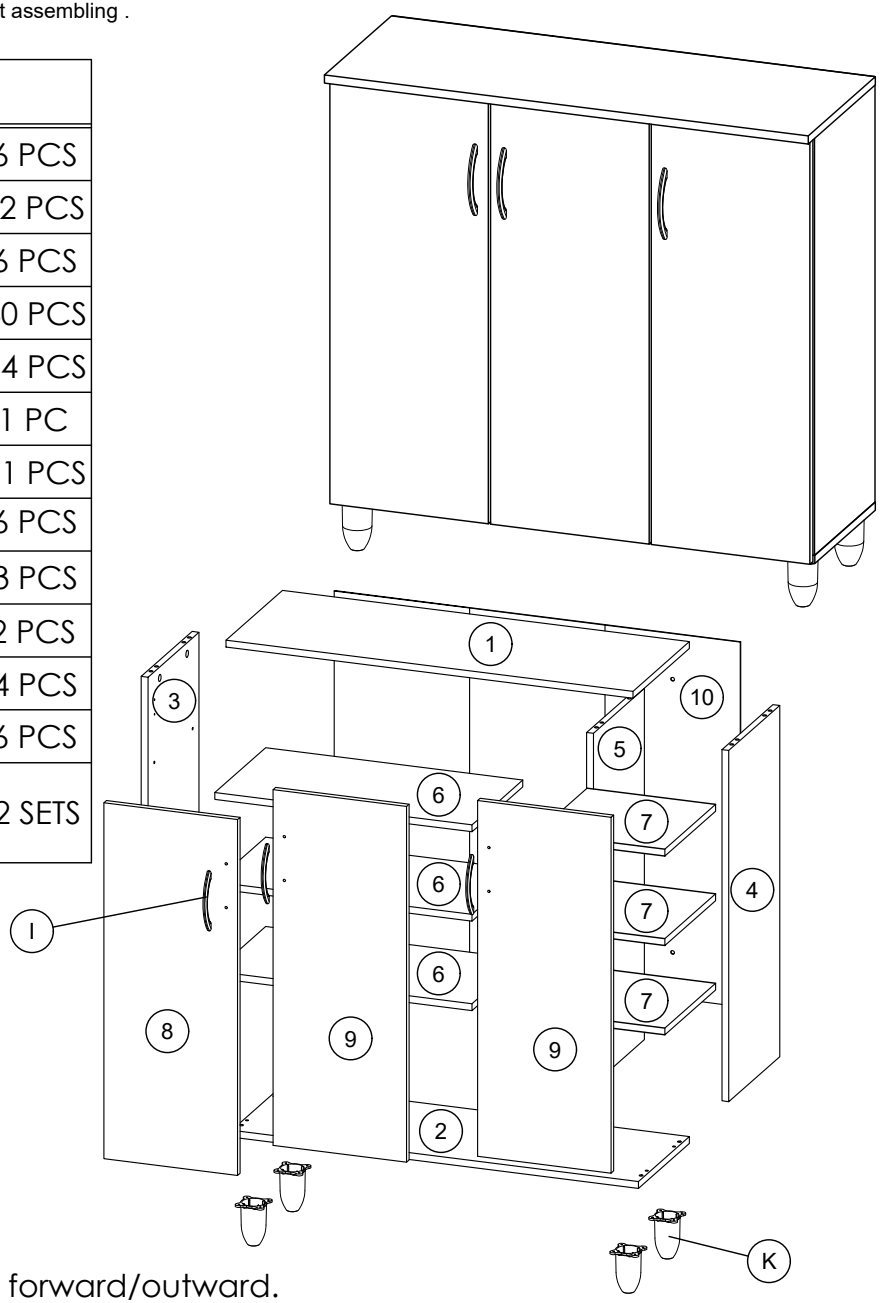

Reminder:
Please ensure that all surfaces and edges with colours/laminations are facing forward/outward.

ASSEMBLY INSTRUCTIONS

STEP 1

Insert hardware **A2** onto panel **(1)**.
(Repeat 6 times.)

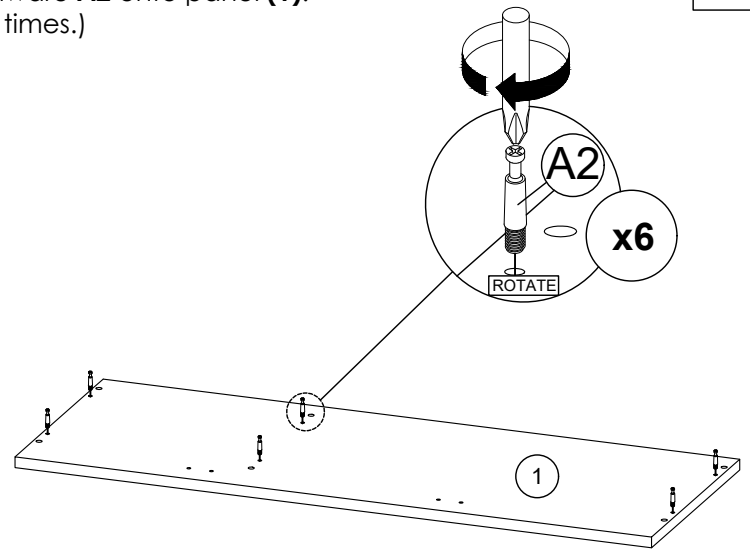

STEP 2

Hit hardware **J** onto panel **(1)**.
(Repeat 2 times.)

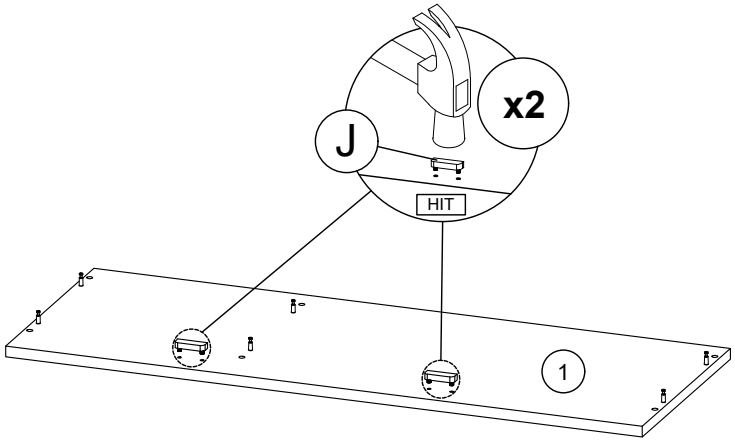

* In this step hardware **A2** are pre-inserted.

STEP 3

- Insert hardware **A1** onto panel **(3)**, **(4)** and **(5)**.
  (Repeat 6 times.)
- Insert hardware **B** onto panel **(3)**, **(4)** and **(5)**.
  (Repeat 12 times.)

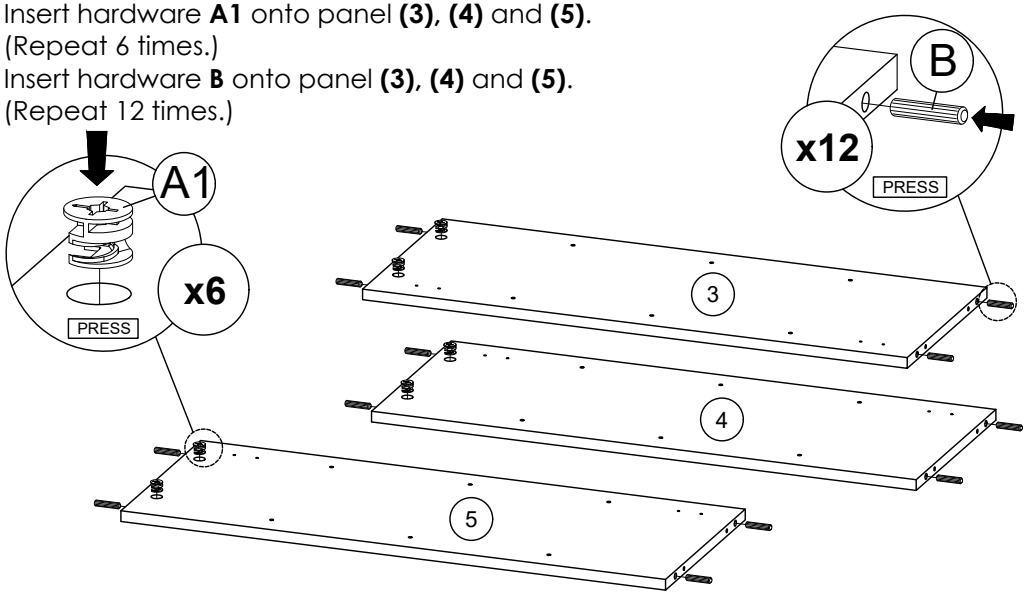

* Ensure the arrows on hardware **A1** point towards mounting positions.

STEP 4

- Attach panel **(3)**, **(4)** and **(5)** to panel **(1)**.
- Insert all hardware **A2** into **A1**.
- Rotate all **A1** until tight.
- Apply **A3** onto all **A1**.
  (Repeat 6 times.)

OR

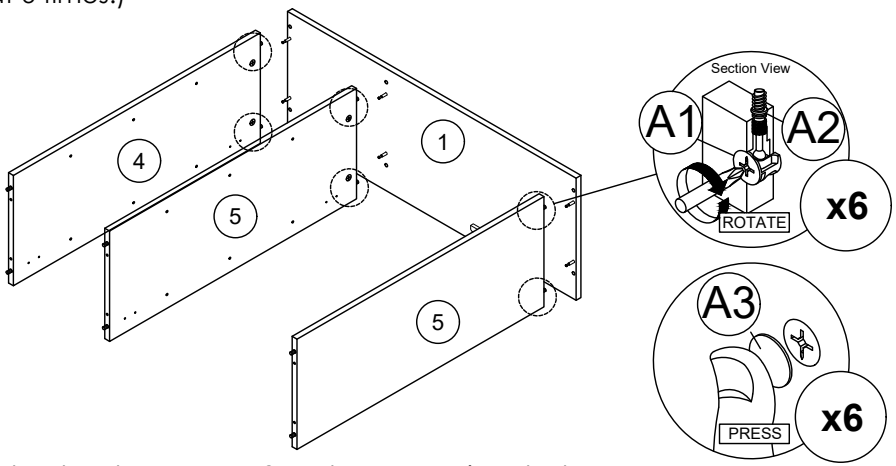

* In this step hardware **A1**, **A2** and **B** are pre-inserted.

ASSEMBLY INSTRUCTIONS

STEP 5

Connect panel **(2)** to panel **(3)** and **(4)** by using hardware **C** and **F**.
(Repeat 6 times.)

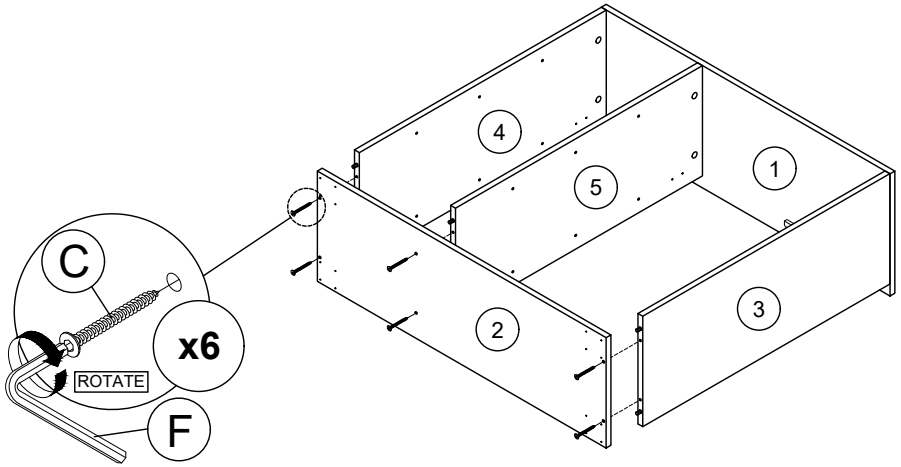

* In this step hardware **B** are pre-inserted.

STEP 6

HAMMER REQUIRED

Assemble panel **(10)** to entire body with hardware **G**.
(Repeat 31 times.)

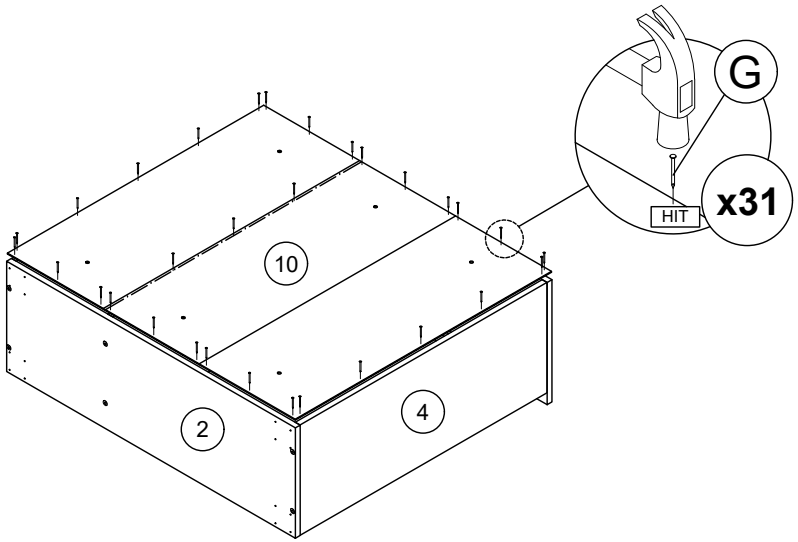

STEP 7

SCREWDRIVER REQUIRED

Assemble hardware **K** into panel **(2)** by using hardware **D.**
(Repeat 16 times.)

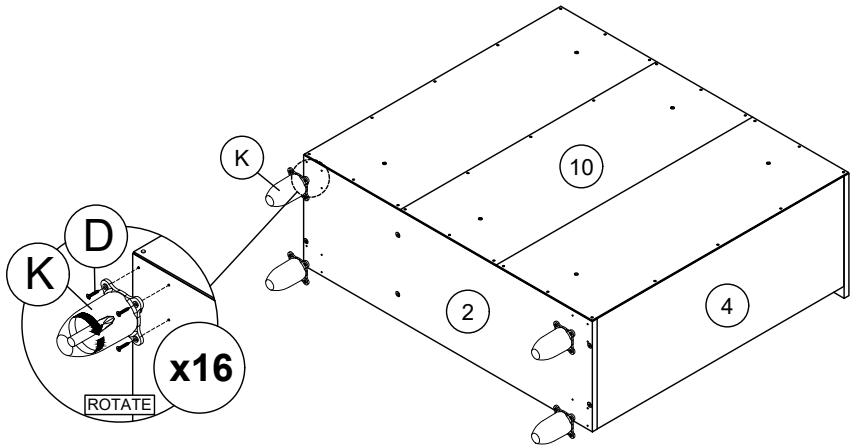

STEP 8

Insert hardware **E** into mounting positions on panel **(3)** and **(4)** by hand.
(Repeat 24 times.)

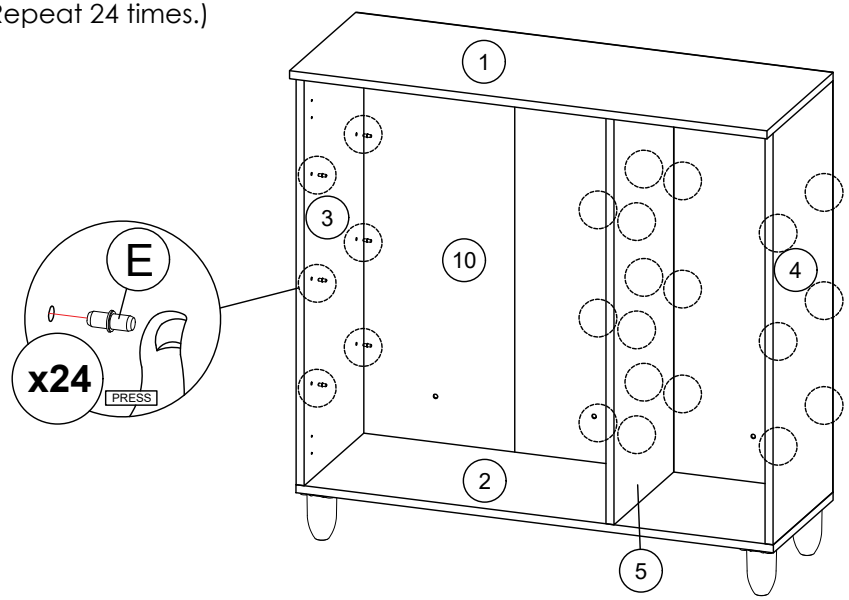

ASSEMBLY INSTRUCTIONS

STEP 9

- Assemble the panel **(6)** into between panel **(3)** and **(5)**. (Repeat 3 times.)
- Assemble the panel **(7)** into between panel **(4)** and **(5)**. (Repeat 3 times.)

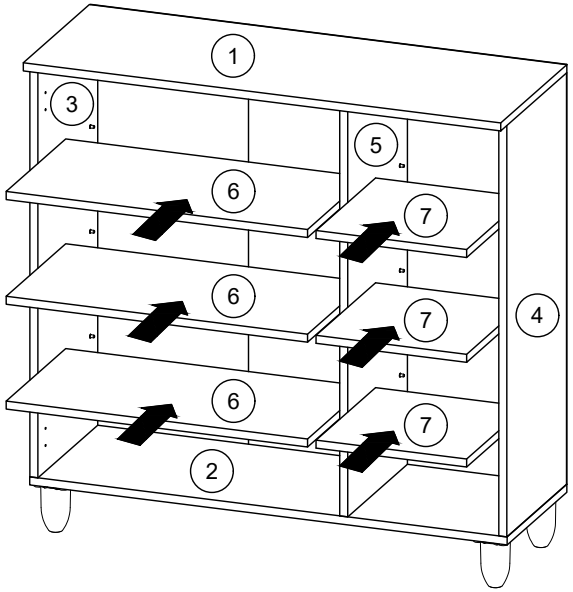

* In this step hardware **E** are pre-inserted.

STEP 10

SCREWDRIVER REQUIRED

Fix hardware **H** onto panel **(8)** and **(9)** by using hardware **D**. (Repeat 12 times.)

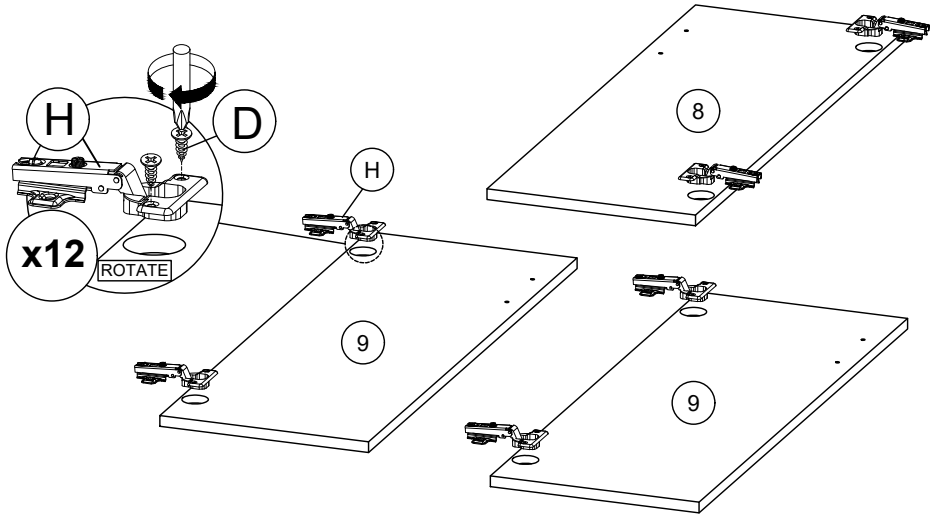

STEP 11

SCREWDRIVER REQUIRED

FIx hardware **I** onto panel **(8)** and **(9)** by using hardware **L**. (Repeat 6 times.)

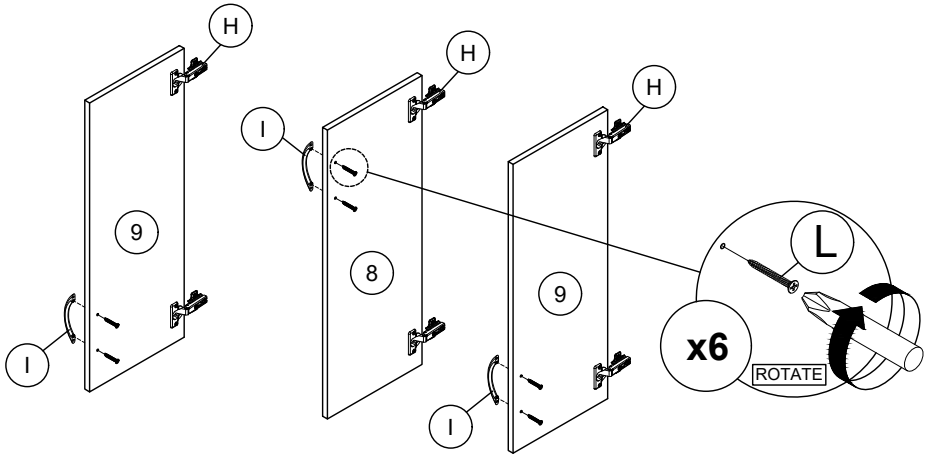

* In this step hardware **H** have been assembled.

STEP 12

SCREWDRIVER REQUIRED

- Fix hardware **H** into panel **(3)**, **(4)** and **(5)** by using hardware **D**. (Repeat 4 times.)
- Tighten or loosen the screw to adjust position of panel **(8)** and **(9)**. (Do only when needed.)

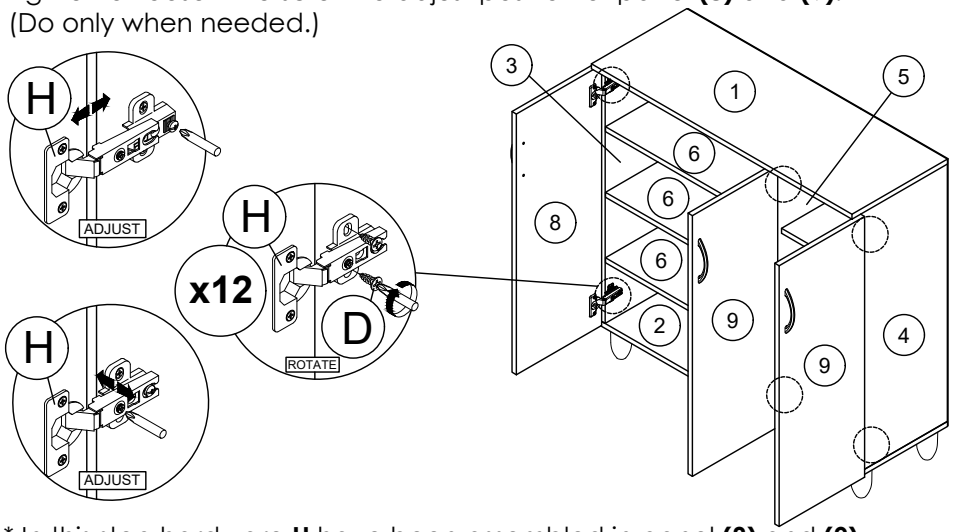

* In this step hardware **H** have been assembled in panel **(8)** and **(9)**.

ASSEMBLY INSTRUCTIONS

STEP 13

SCREWDRIVER REQUIRED

Assemble hardware **M1** into panel **(1)** and **(10)** by using hardware **M2**.
(Repeat 2 times.)

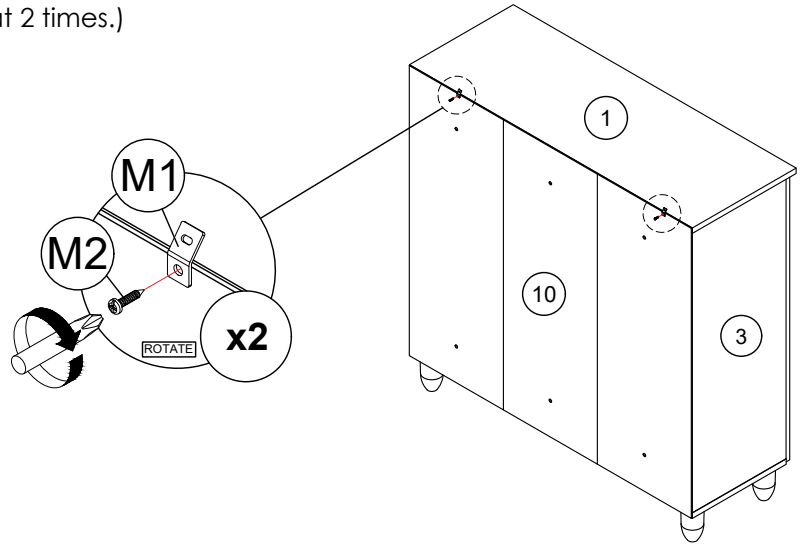

STEP 14

POWER DRILL REQUIRED

HAMMER REQUIRED

- Mark and use the power drill to drill a hole on the wall.
- Hit hardware **M3** into the wall.
(Repeat 2 times.)

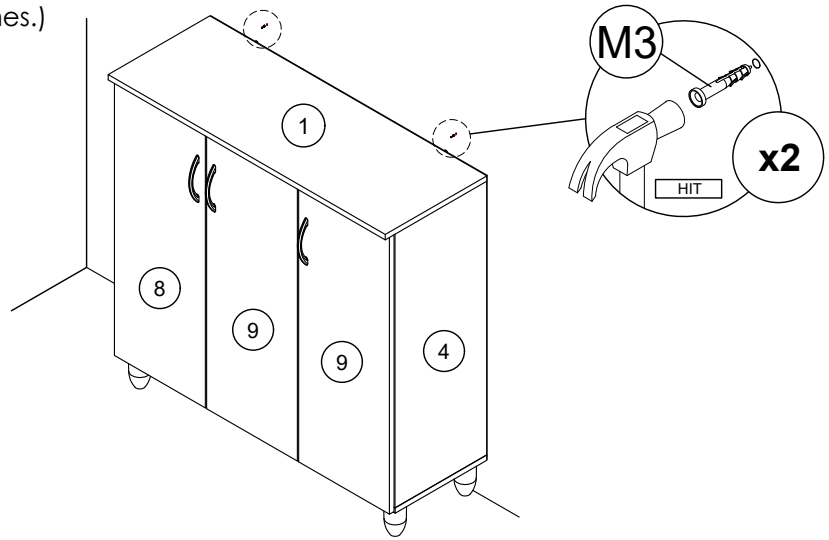

STEP 15

SCREWDRIVER REQUIRED

- Assemble hardware **M1** to **M3** by using hardware **M4**.
(Repeat 2 times.)

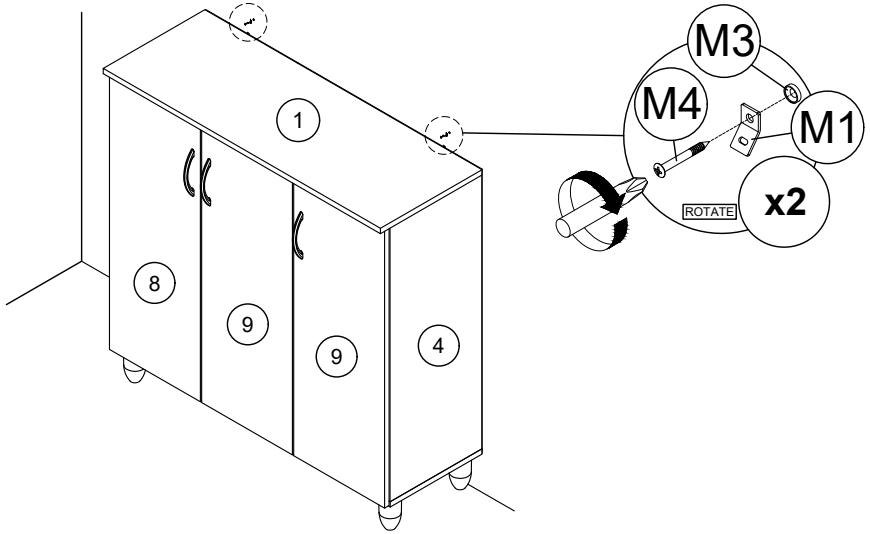

STEP 16
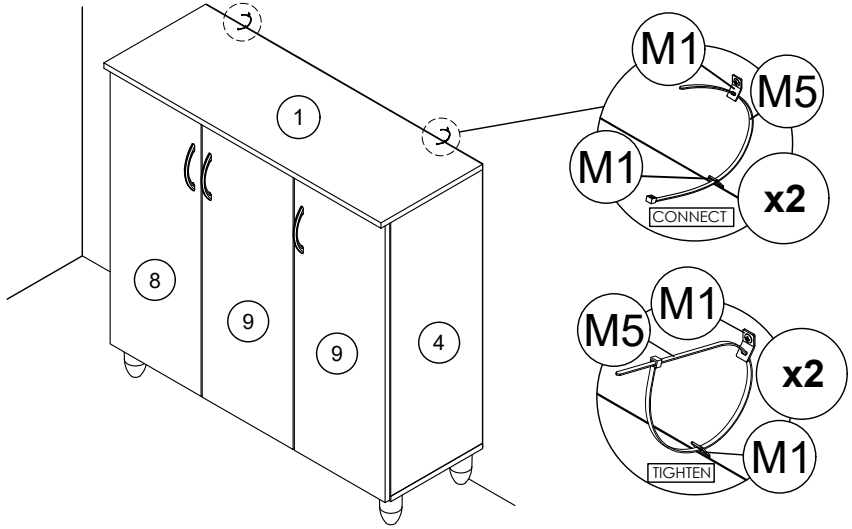
- Connect two of the hardware **M1** by using hardware **M5**.
- Tighten the hardware **M5.**
(Repeat 2 times.)