Vanity Desk

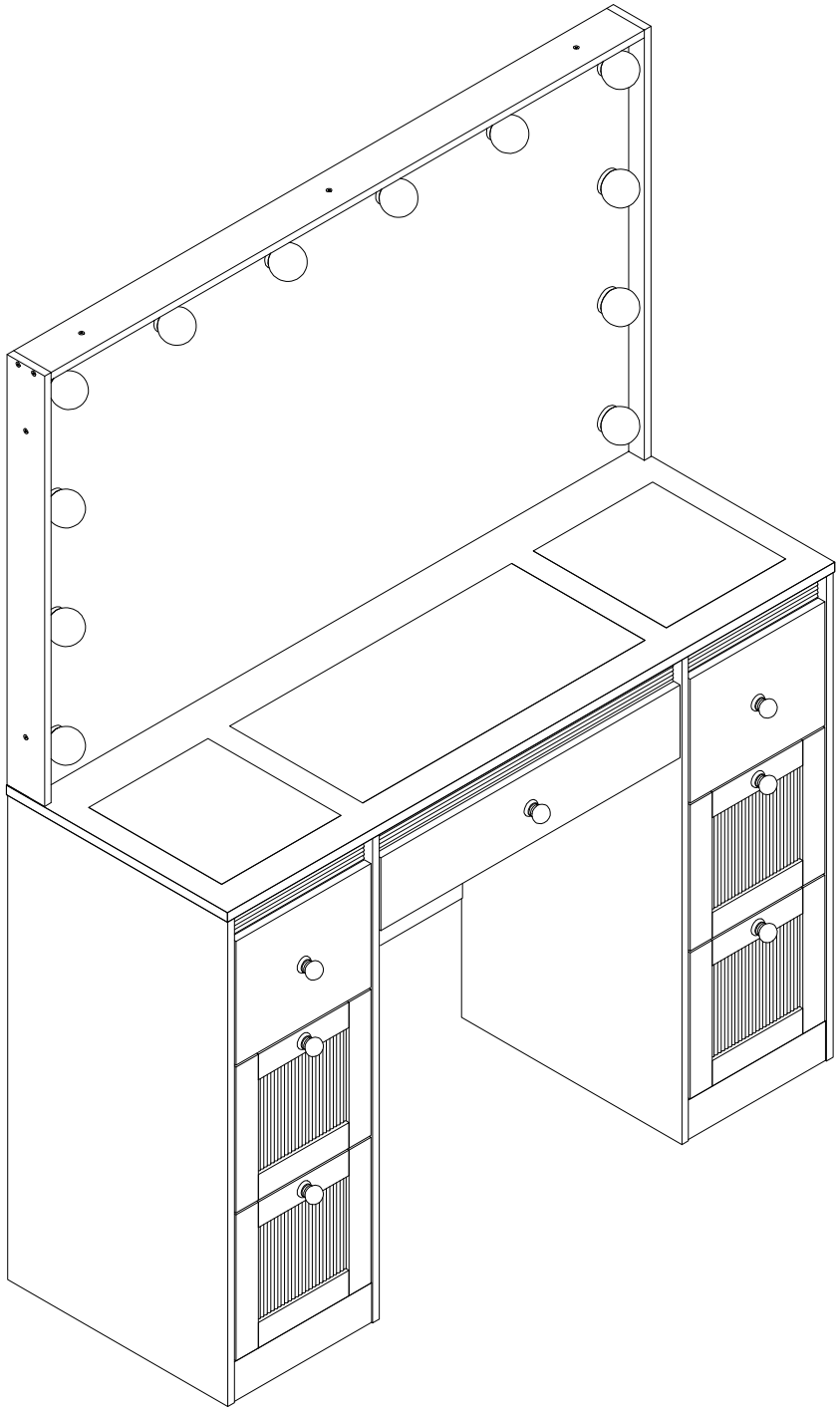

MADE IN CHINA

Foreword:

Thank you for choosing our Vanity Desk

Please read all instructions carefully before starting assembly.
Also,we recommend that the unit is fully assembled on a level surface.
With just a little upkeep and maintenance, With a little care and maintenance, our Vanity Desk will create a relaxed atmosphere for your makeup.

·To clean panels, use clean water on a damp cloth.

·When assembling Vanity Desk, please handle all panels and/or hardware with care to avoid any possibilities of damages and /or injuries.

Please check contents before assembly. If any items are missing or damage, do not take the unit back to the store. Feel Free to

Email us: furnitureserviceus@outlook.com

For customer service, we will save you time by addressing and correcting any problems directly for you.

MADE IN CHINA

General Guidelines

* Please read the following instruction carefully and use the product accordingly.
* Please keep this manual and hand it over when you transfer the product.
* This summary may not include every detail of all variations and considered steps.Please contact us when further information and help are needed.

Notes

* The product is intended for indoor use only. The product must be assembled and used in accordance with the provisions of the manual. Personal injury and/or damage to product may occur if products are used outside of their intended purposes and/or if products have been changed/modified from their original design. The seller does not assume any responsibility or liability with respect to any injury/damage caused by incorrect assembly or improper use.
* Please match the corresponding part and fitting based on the part number in the manual. If the part does not match with the fitting, please check the piece as specified in this manual.
* If there are any defective or missing parts after unpacking, please cease assembly immediately and contact us.
* Please assemble the item on a spacious surface and do not place the unwrapped product directly on the ground to avoid product damage.
* Please do not stand or sit on the wooden boards.
* Please wear gloves during the assembly and/or disassembly process to avoid scratches from any sharp edges..
* During assembly, first loosely align all screws with the corresponding pre-drilled holes and then tighten the screws one by one.
* Periodically inspect screw tightness while the product is in use. If necessary, retighten to ensure structural integrity.
* If you accidentally spill water or another liquid on the surface, immediately wipe clean with a dry towel.
* Please keep the product away from sharp, pointed objects and corrosive substances to prevent product damage.
* Please place this item on level, solid ground during use.
* Avoid long-term exposure to humid environments to prevent mildew.
* Keep the product away from fire sources and high temperatures. Do not expose the product to direct sunlight.
* Do not place any hot objects on the surface of the product.

Warnings

* Children are not allowed to assemble the product. During assembly, keep all any small parts out of the reach of children as they may be fatal if swallowed or inhaled.
* Children are forbidden to climb or play on the product to avoid serious bodily injury caused by the toppling.
* Keep plastic packing bags out of reach of children to avoid any potential danger, such as suffocation.
* The total static load capacity of all shelves is 50kg (110 lbs). Please do not place overweight items on the product.
* The product should be attached to the wall with the included anti-tipping kit to prevent personal injury caused by accidentally tipping over.

ASSEMBLY TOOLS REQUIRED
(NOT INCLUDED)

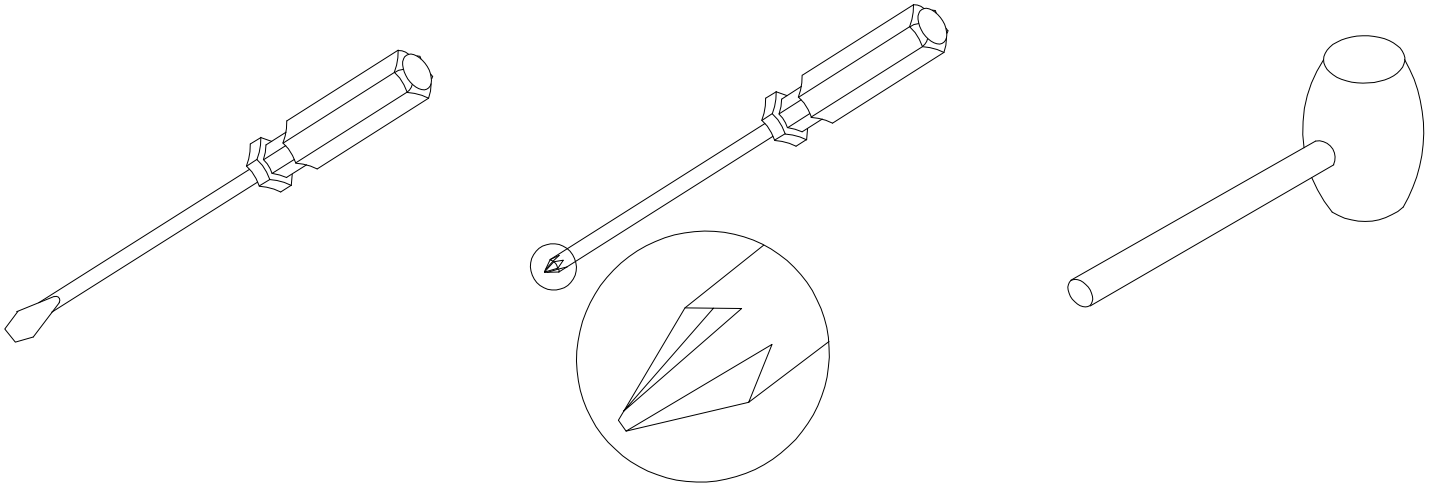

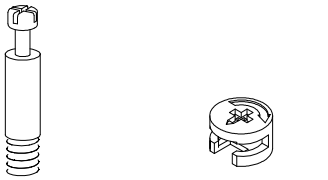

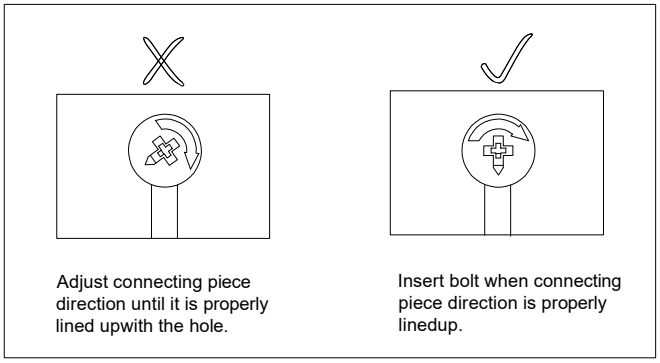

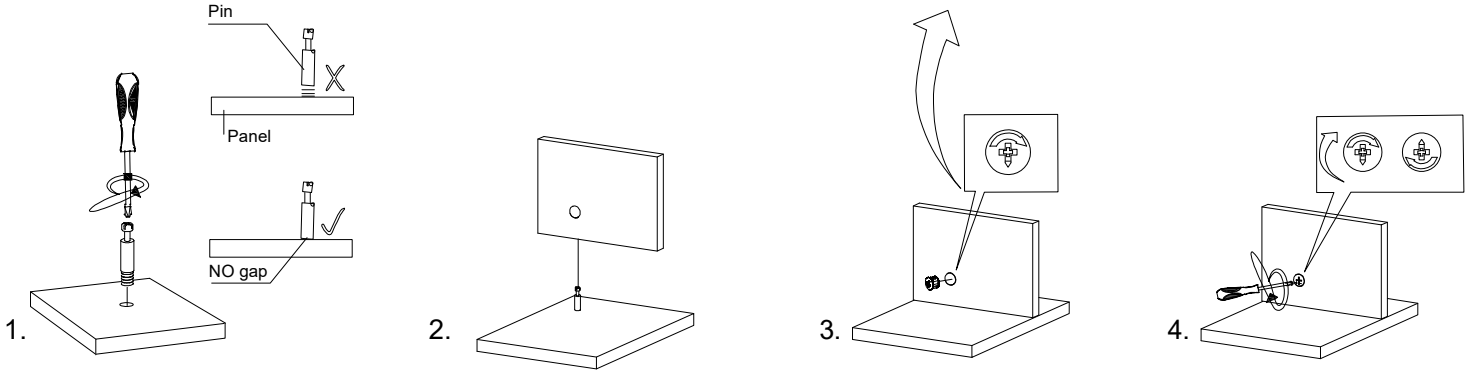

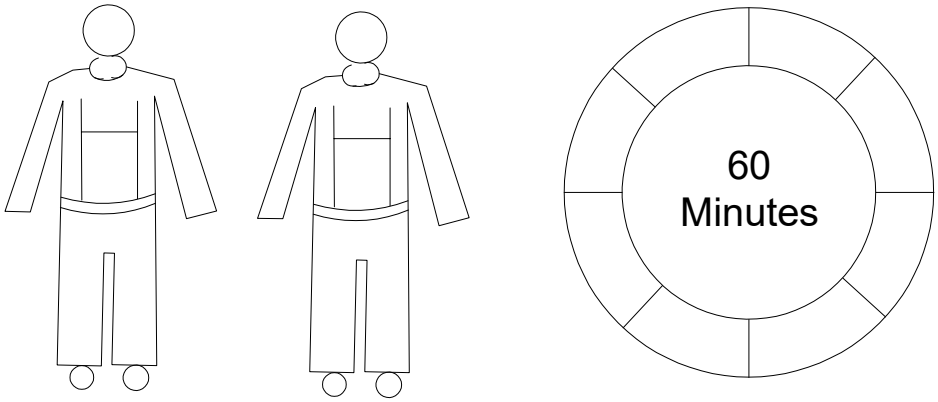

MADE IN CHINA

Hardware Provided

A

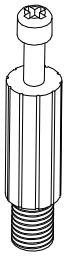

X 68

B

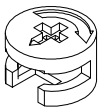

X 68

C

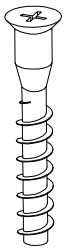

X 56

D

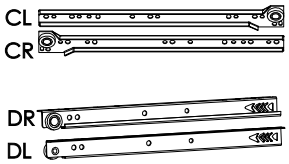

X 7

E

M4*12

X 37

F

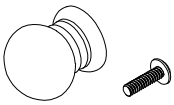

M4*16

X 7

G

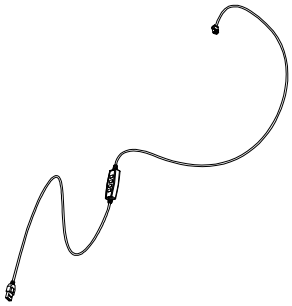

X 1

H

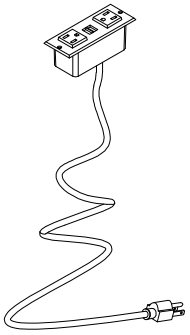

X 1

I

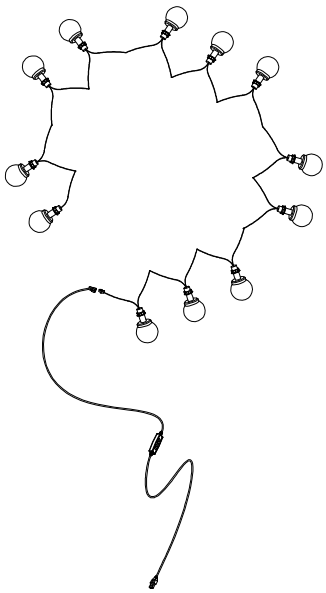

X 1

J

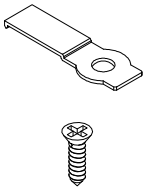

X 6

Hardware Provided

K

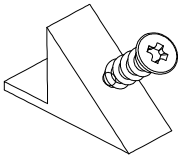

X 12

L

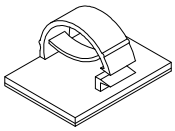

X 3

M

M3.5*12

X 28

X

X 1

Z

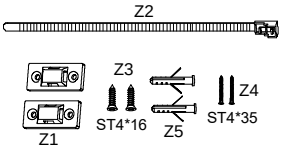

X 2

MADE IN CHINA

Exploded View

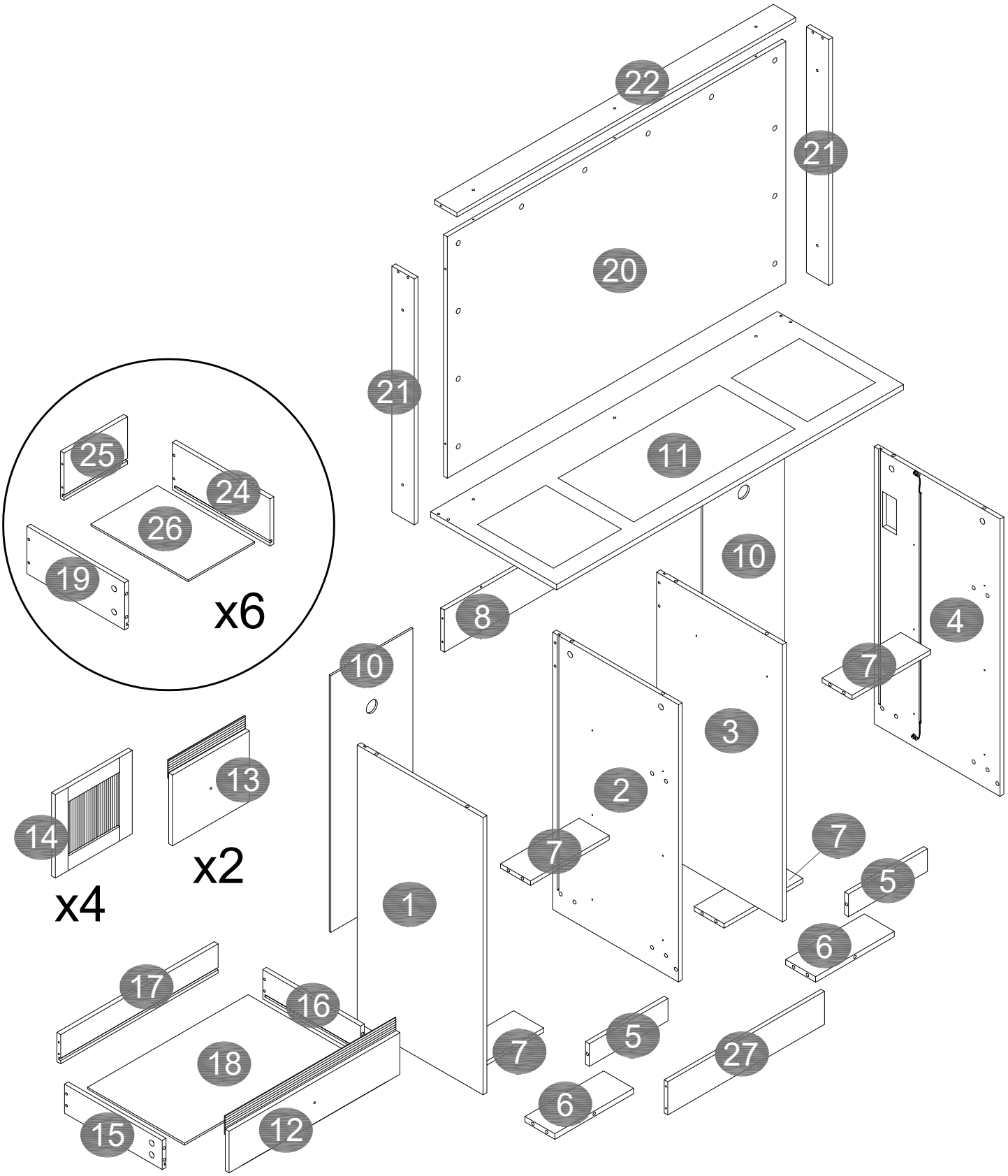

Step 1

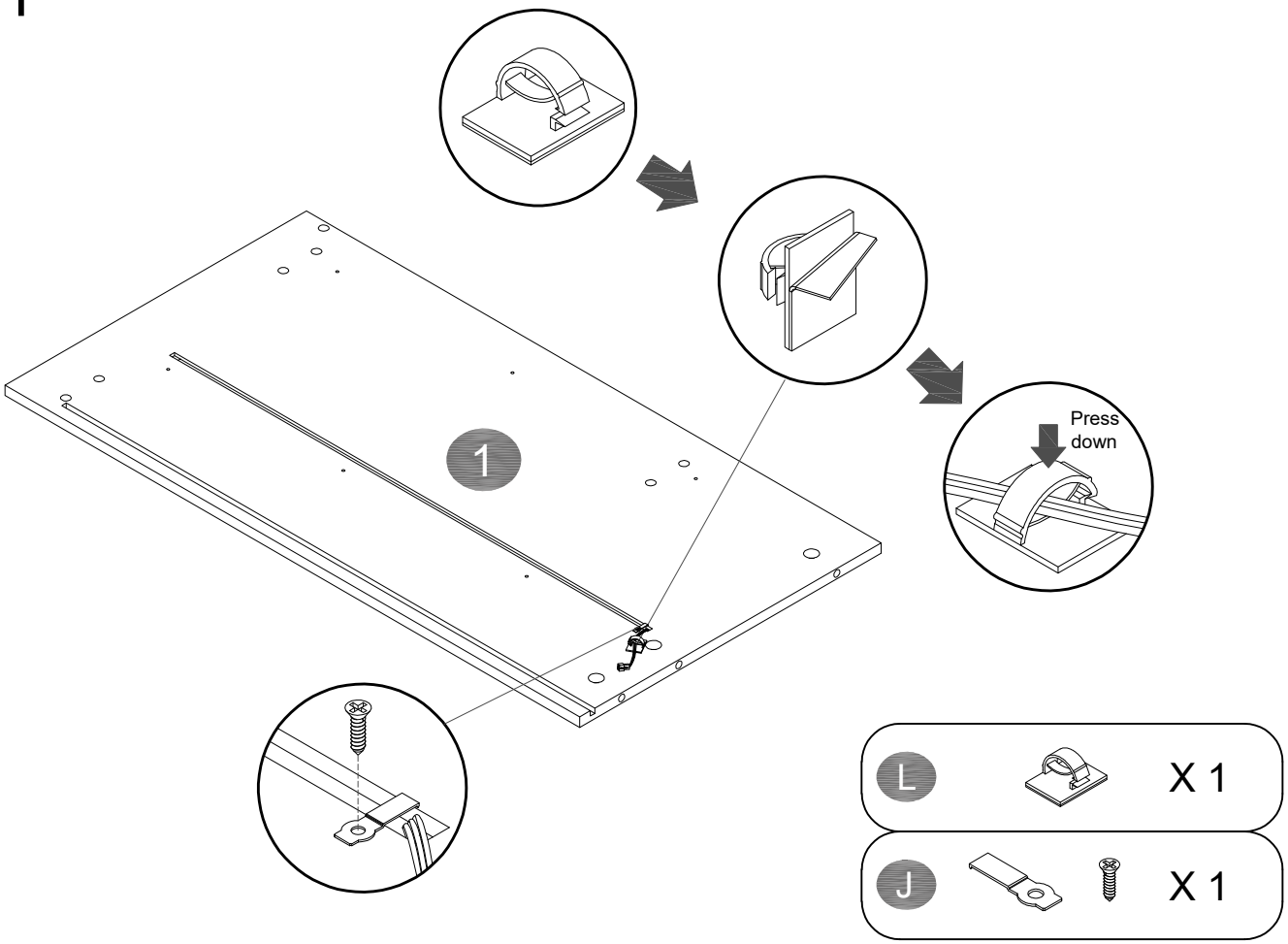

Step 2

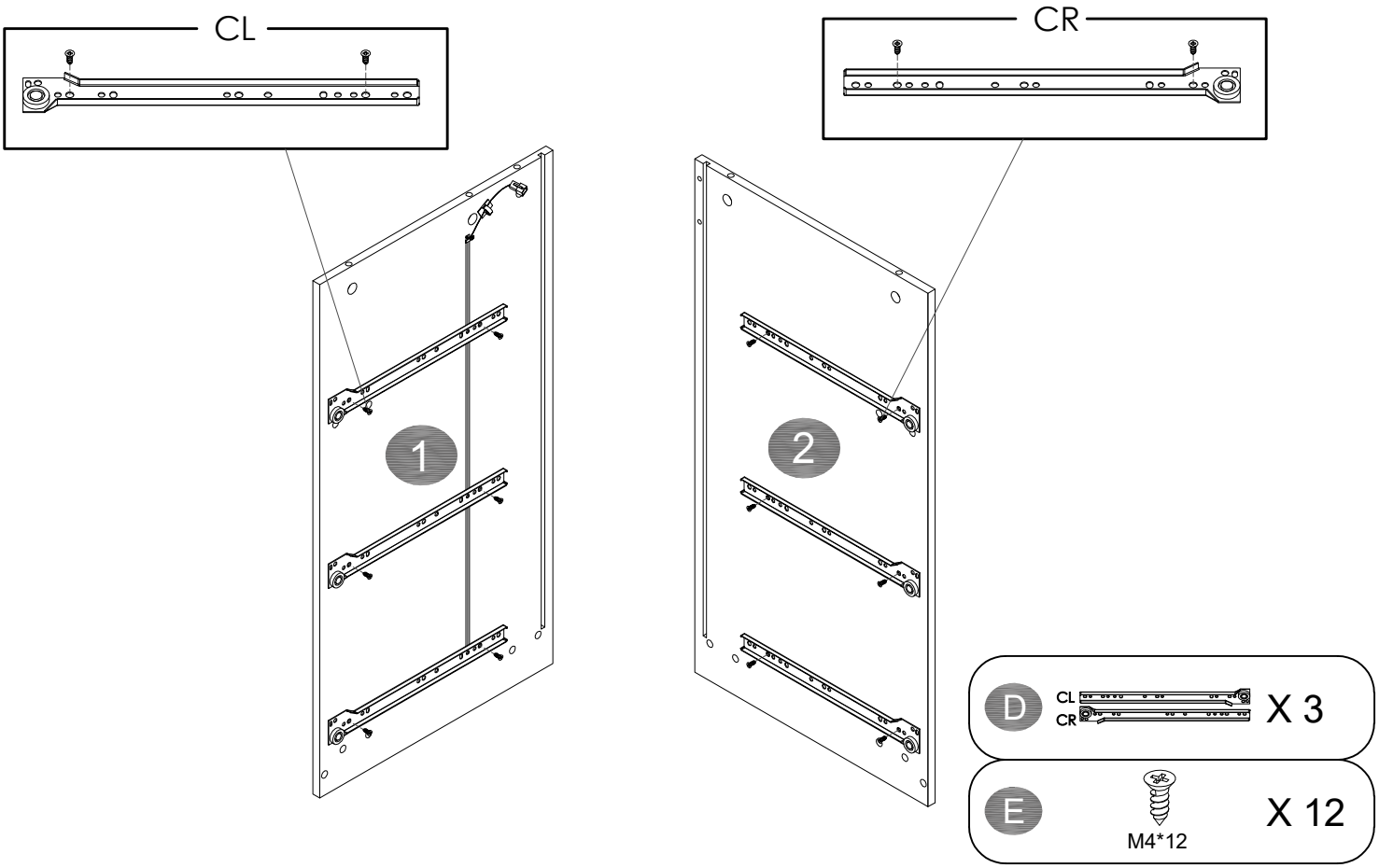

MADE IN CHINA

Step 3

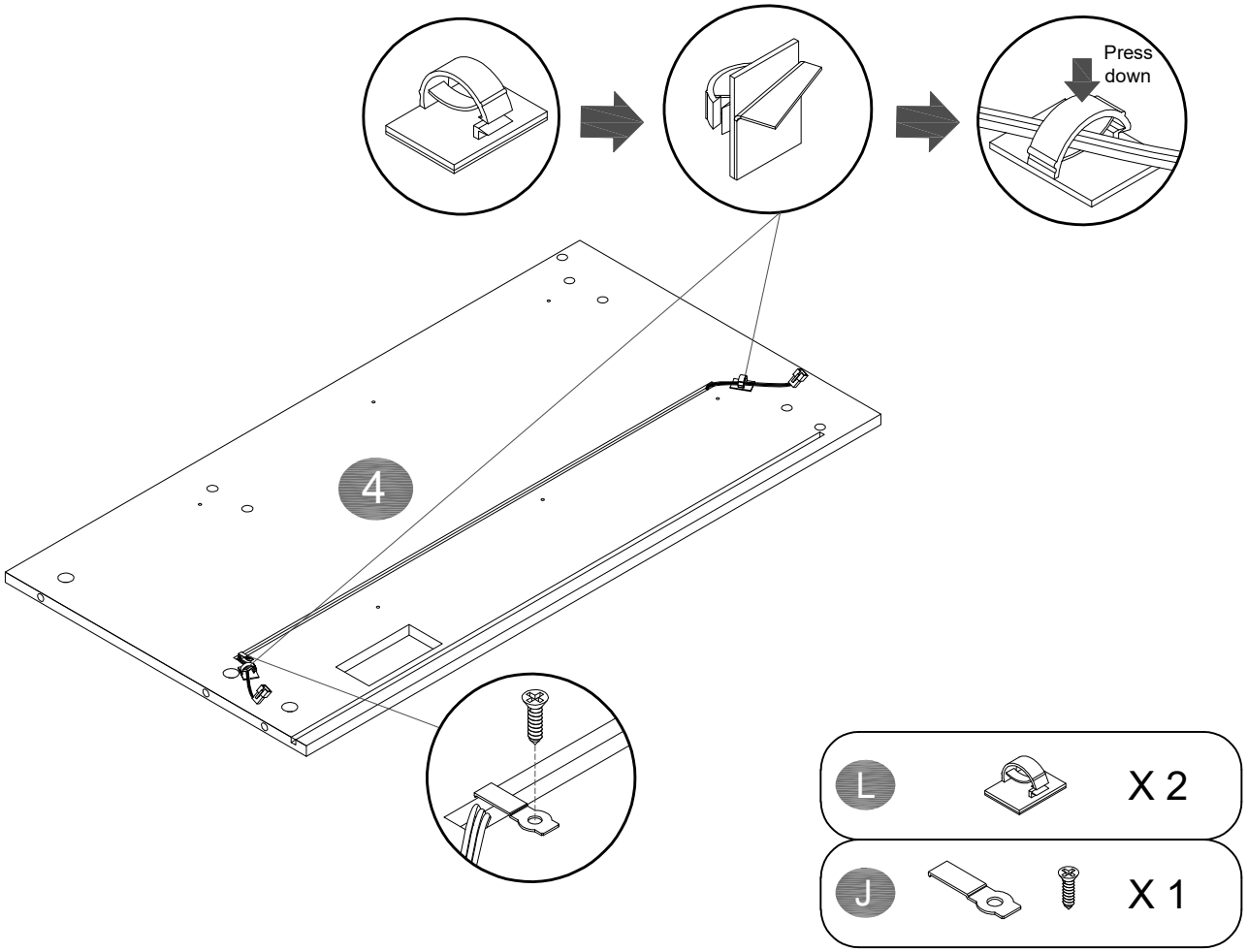

Step 4

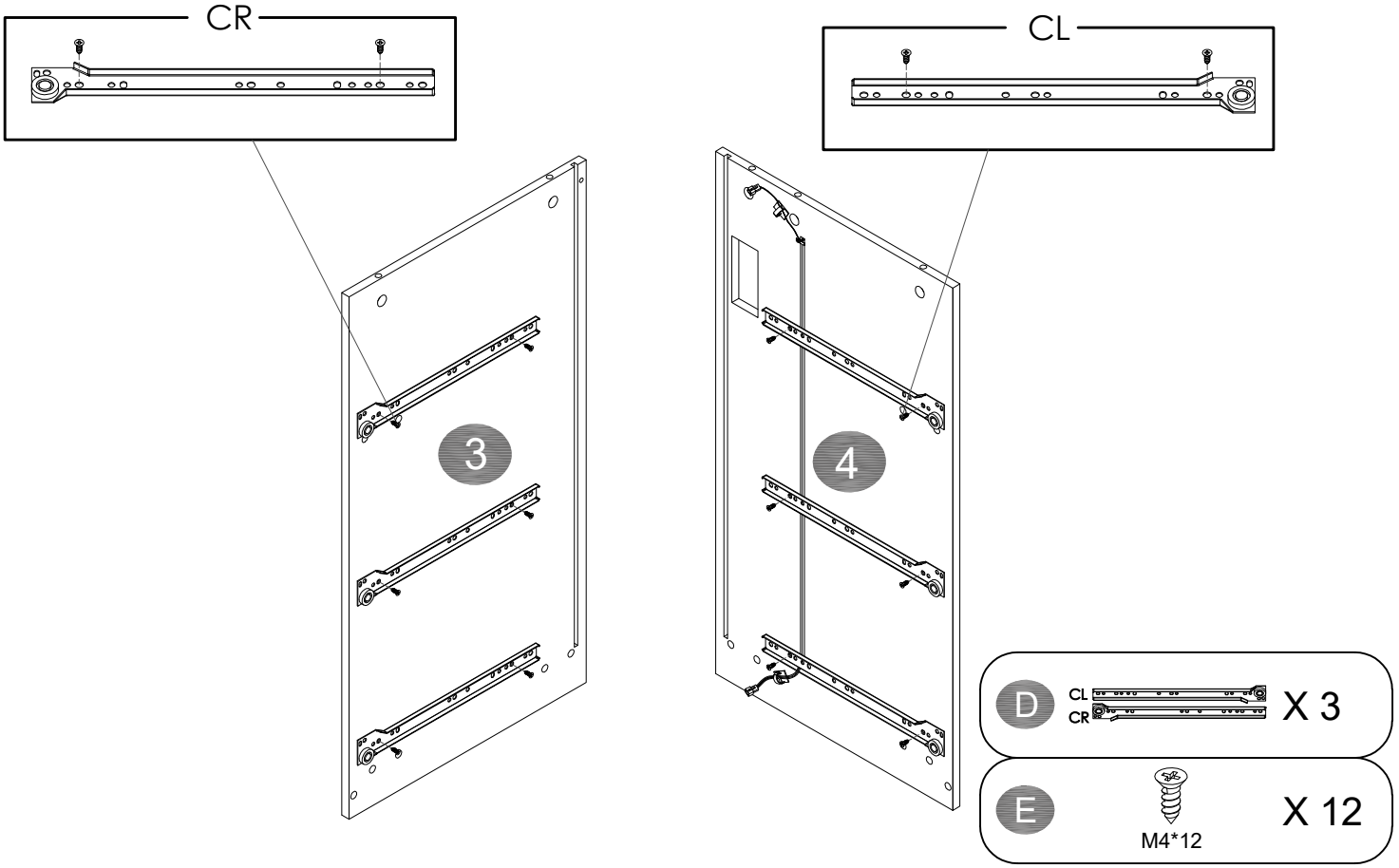

Step 5

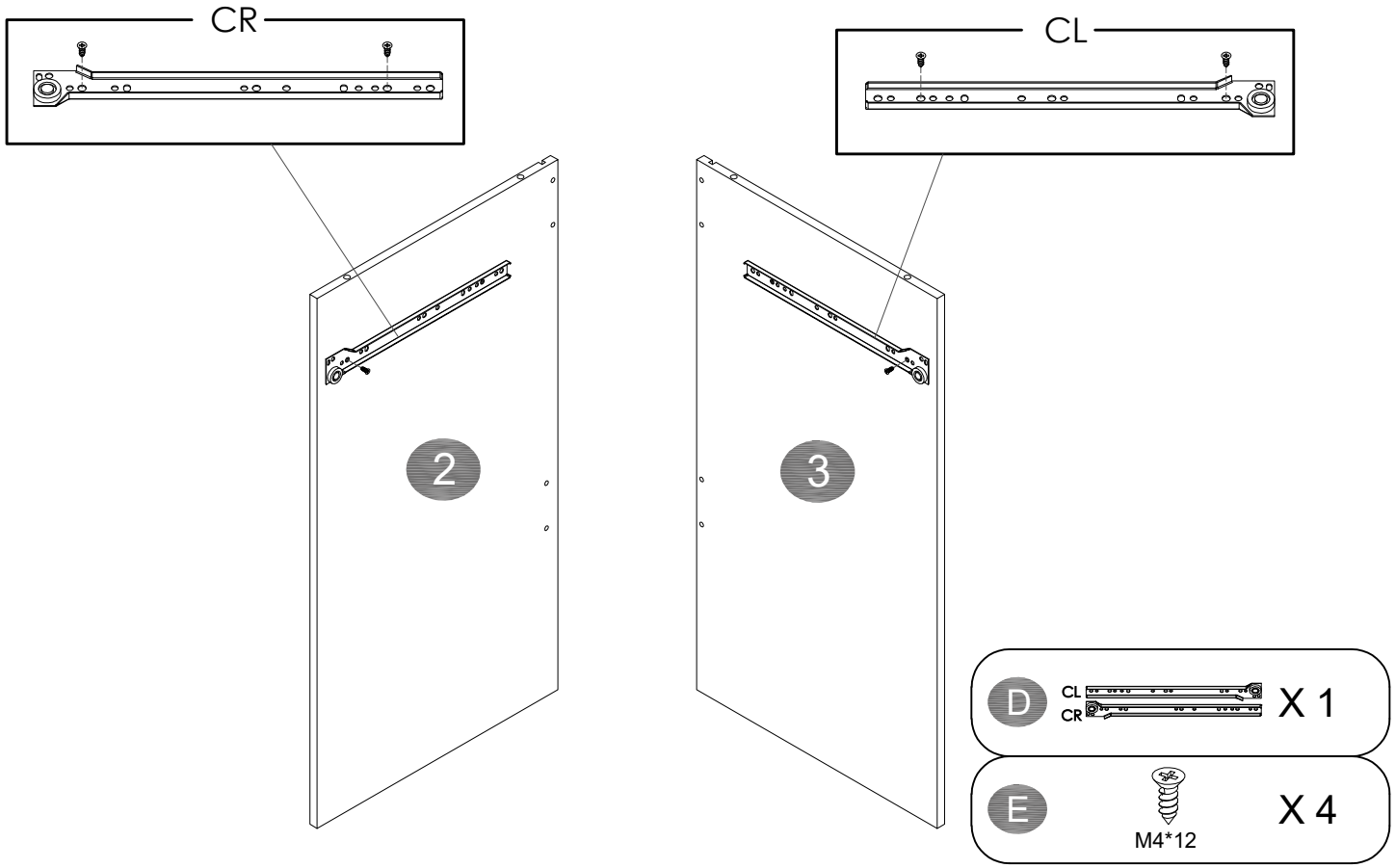

Step 6

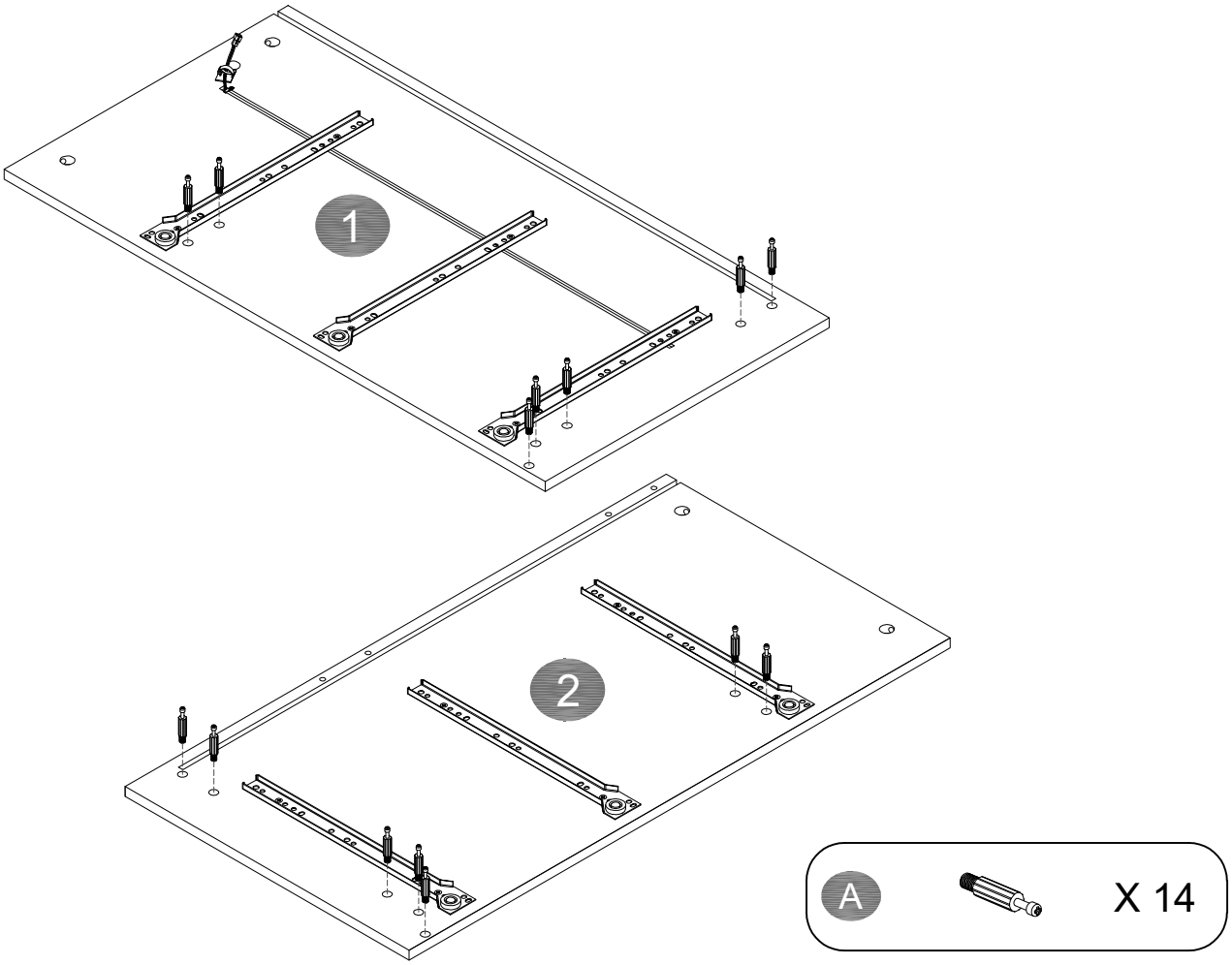

MADE IN CHINA

Step 7

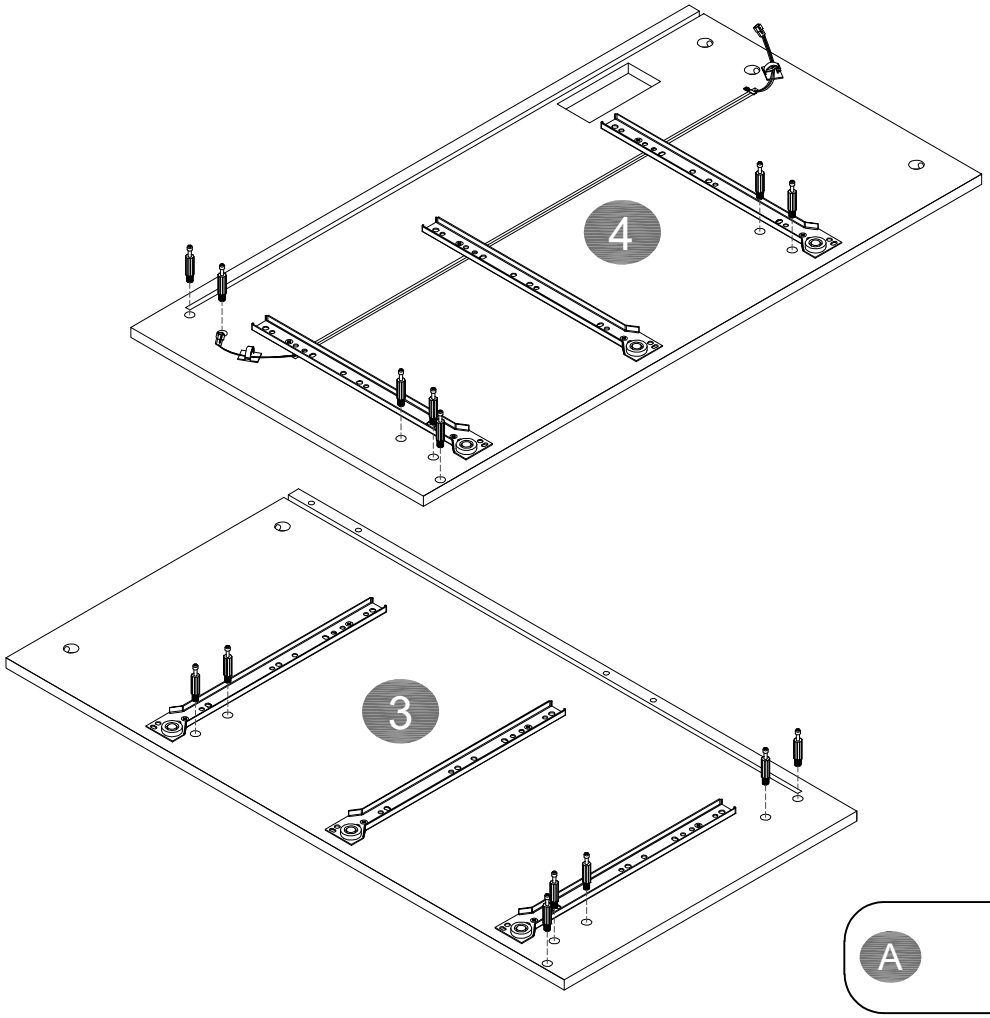

A X 14

Step 8

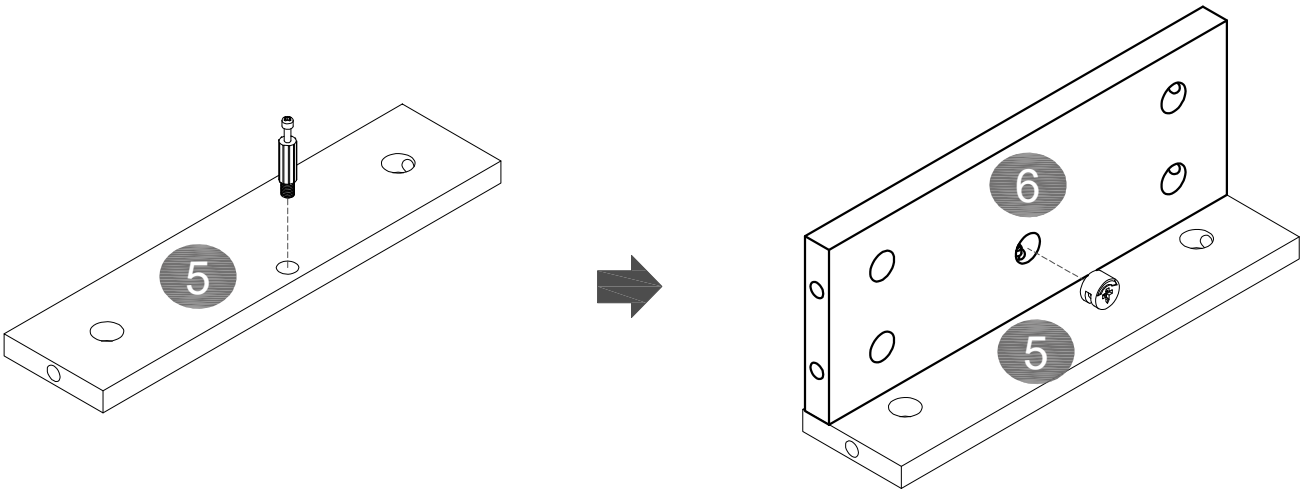

x 2

A X 2

B X 2

Step 9

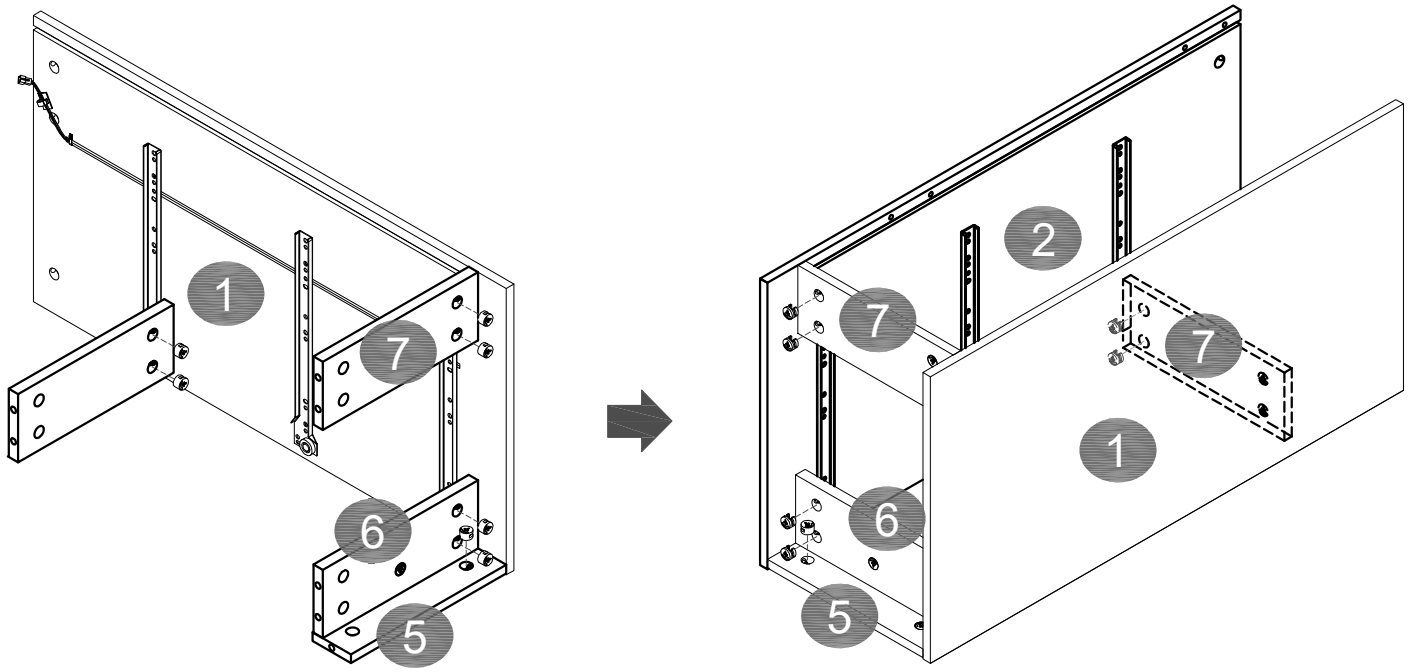

B X 14

Step 10

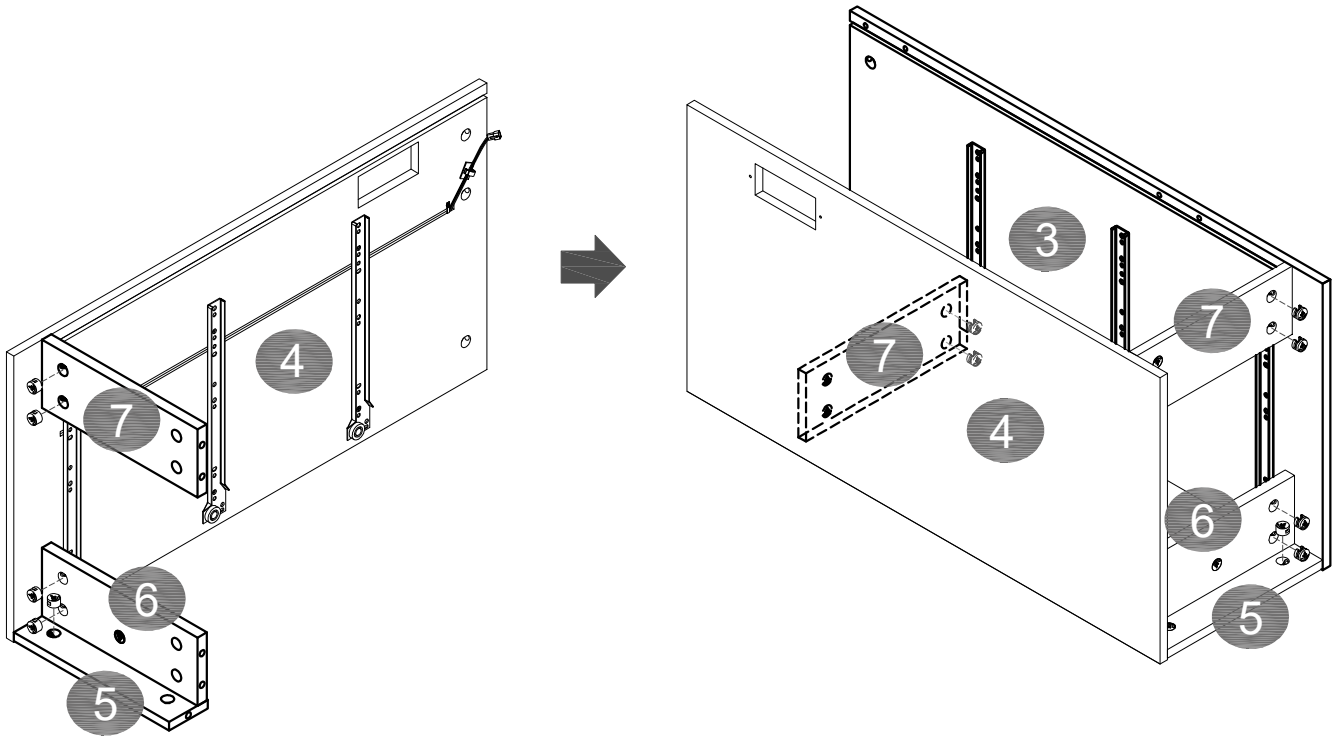

B X 14

MADE IN CHINA

Step 11

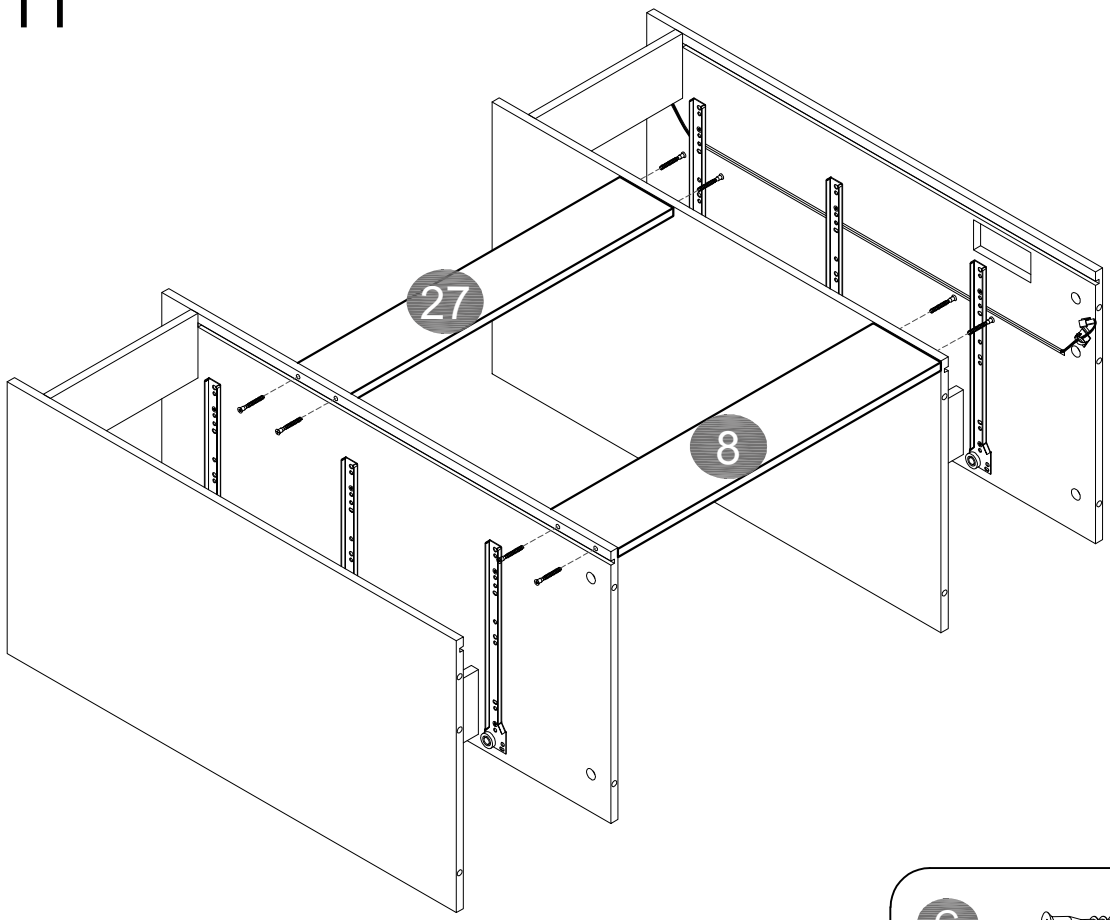

C X 8

Step 12

Please flip the cabinet after completing this step.

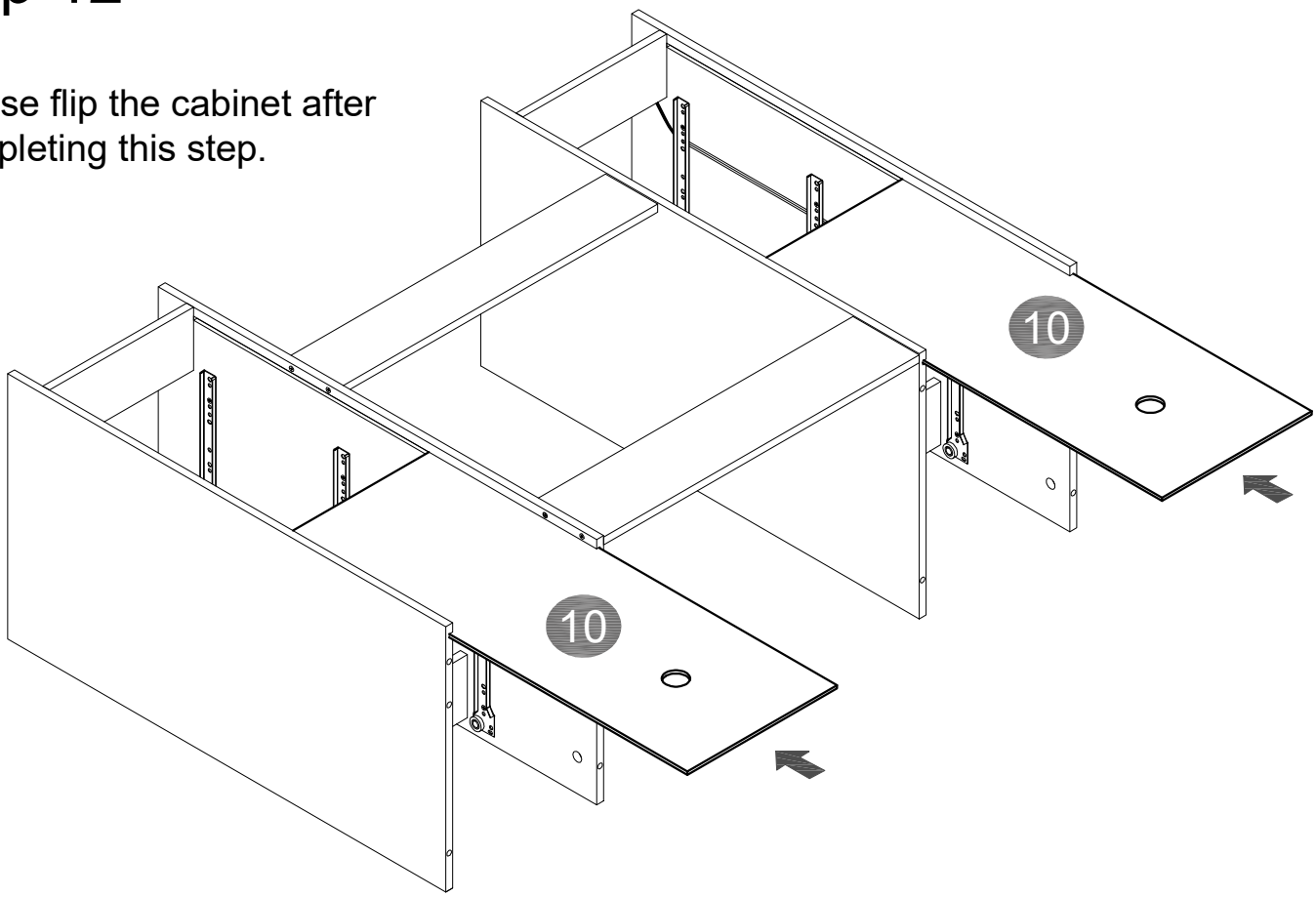

Step 13

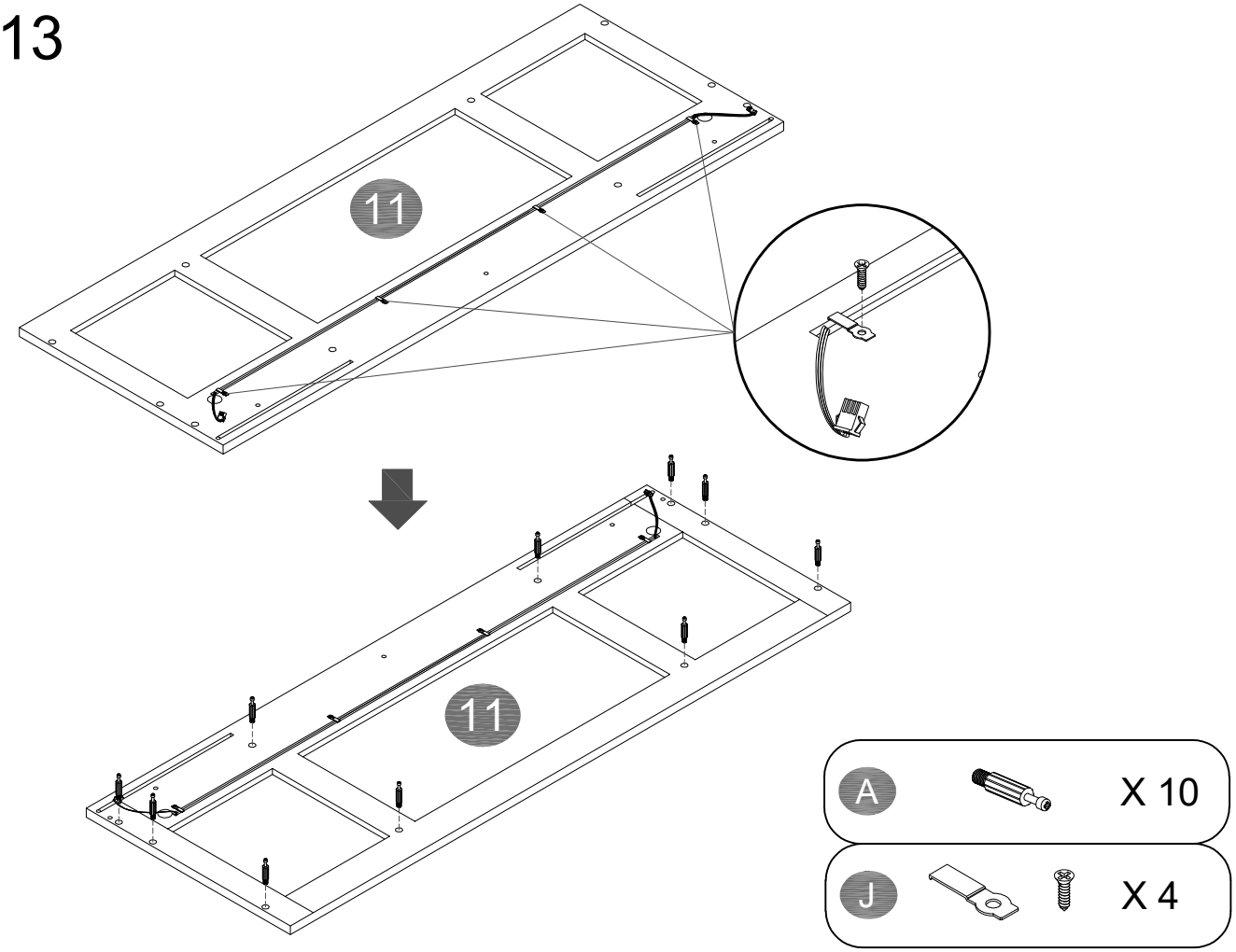

Step 14

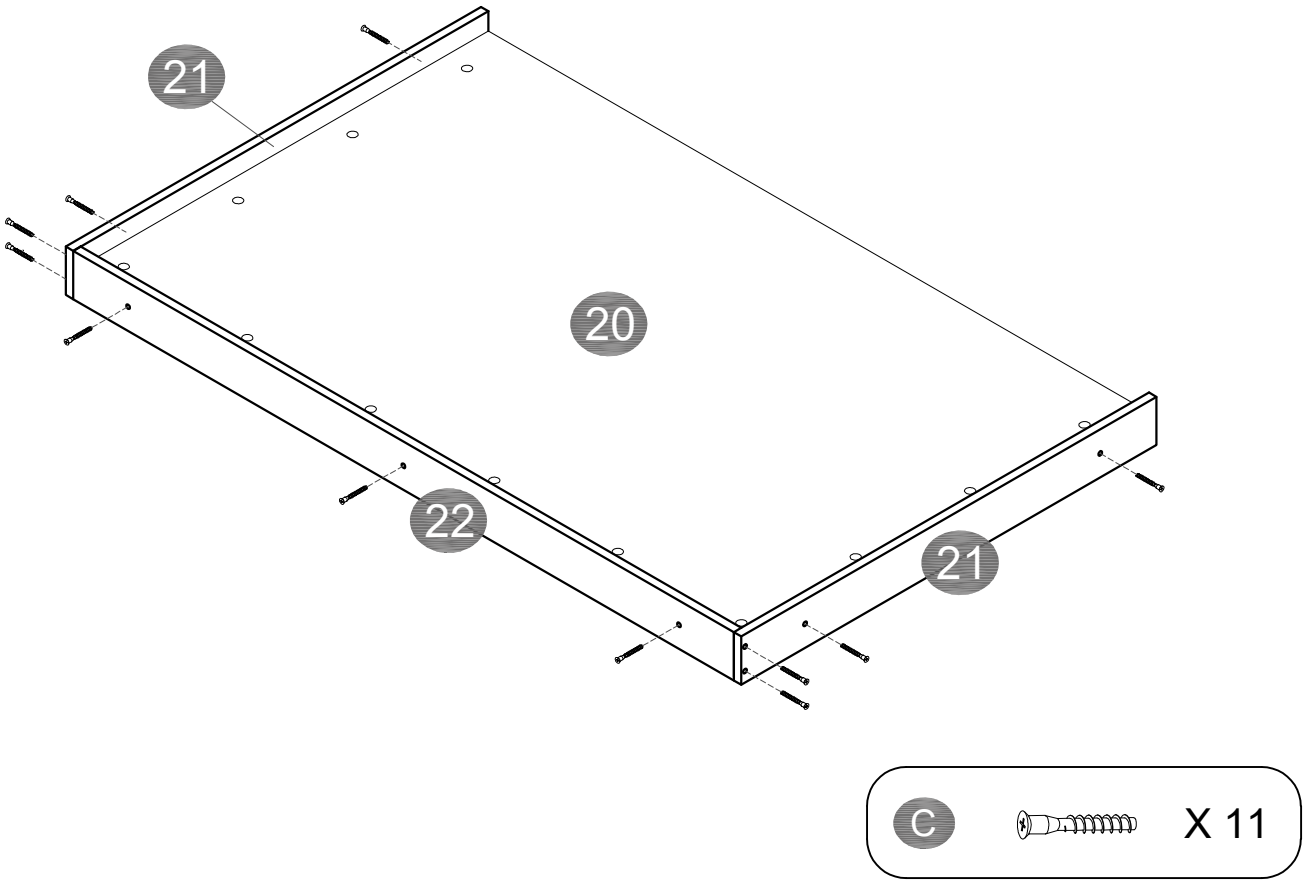

MADE IN CHINA

Step 15

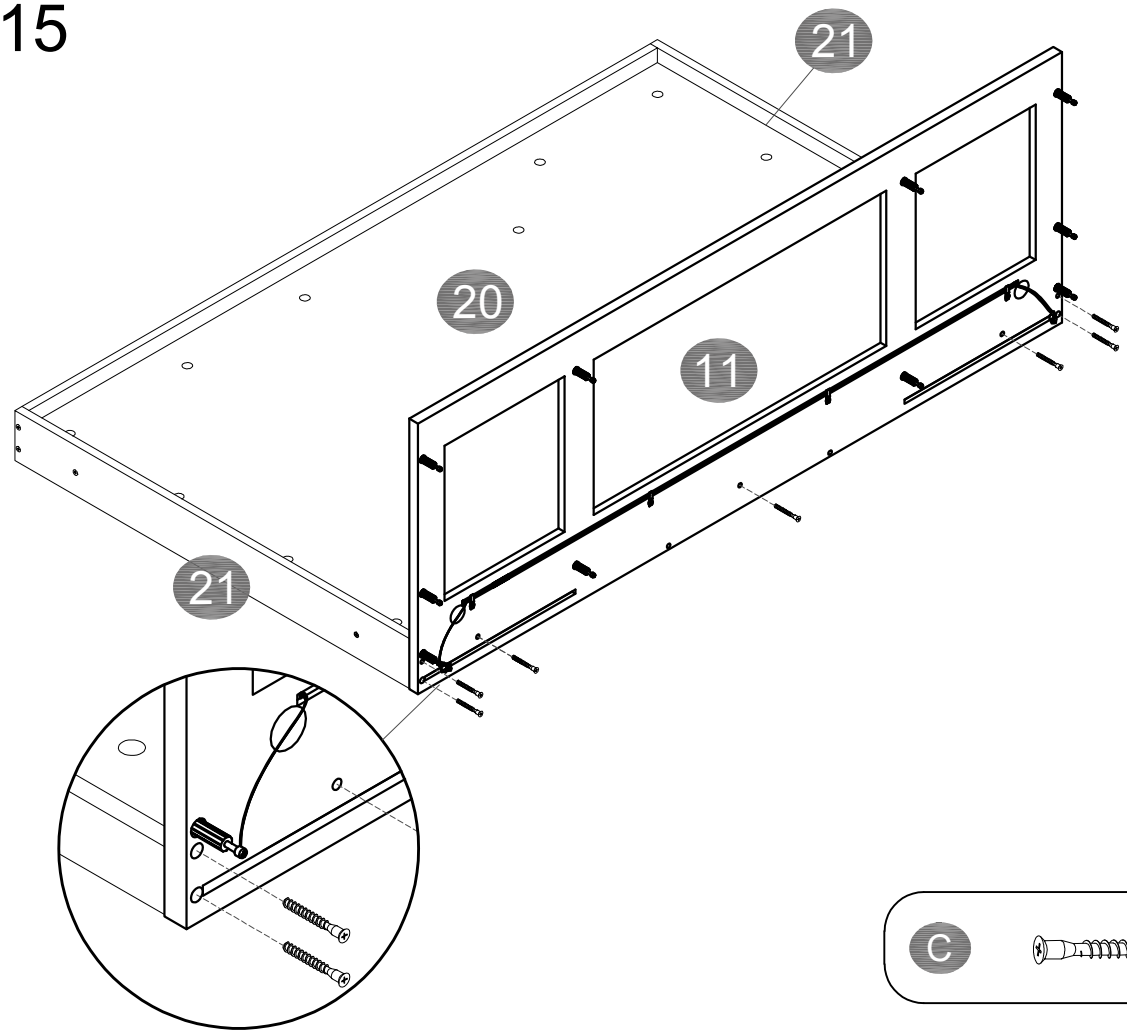

C X 7

Step 16

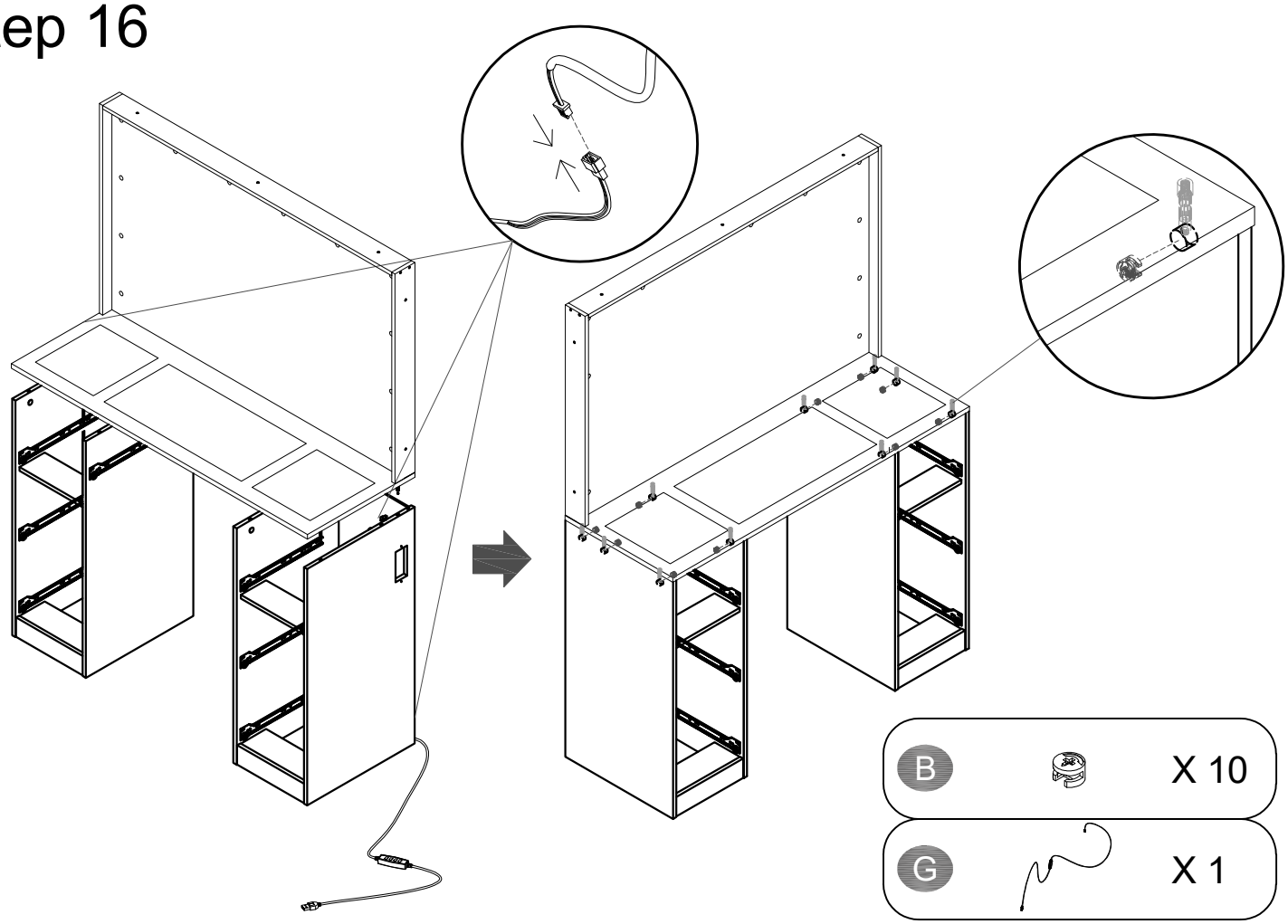

B X 10

G X 1

Step 17

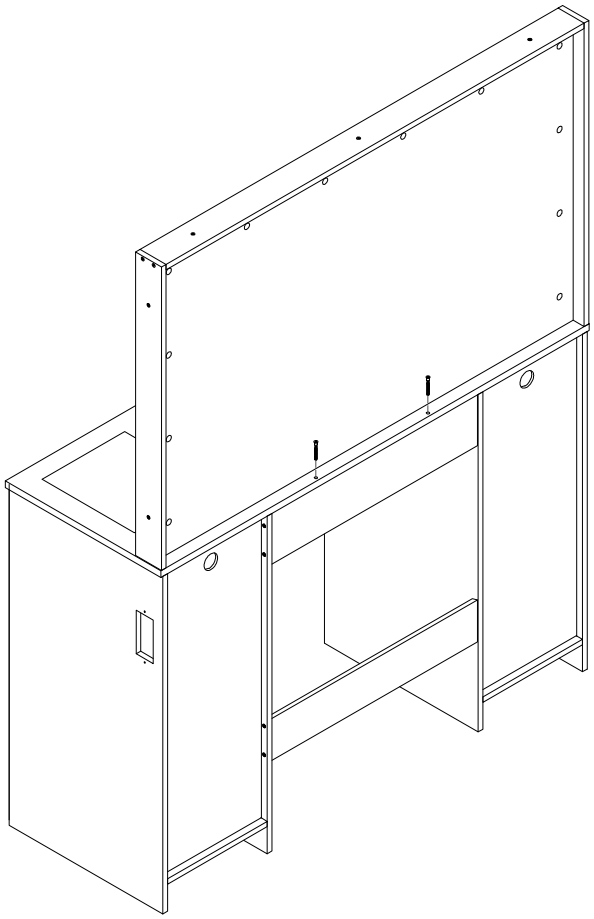

C X 2

Step 18

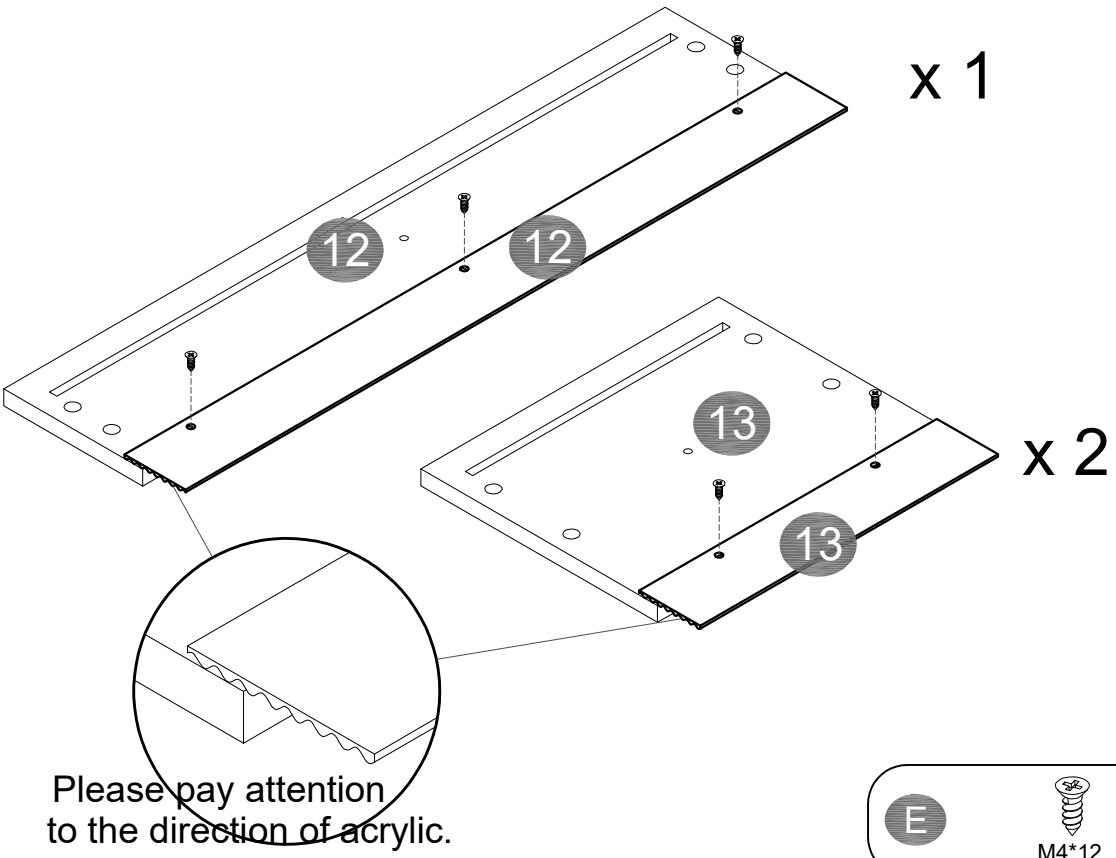

E M4*12 X 7

MADE IN CHINA

Step 19

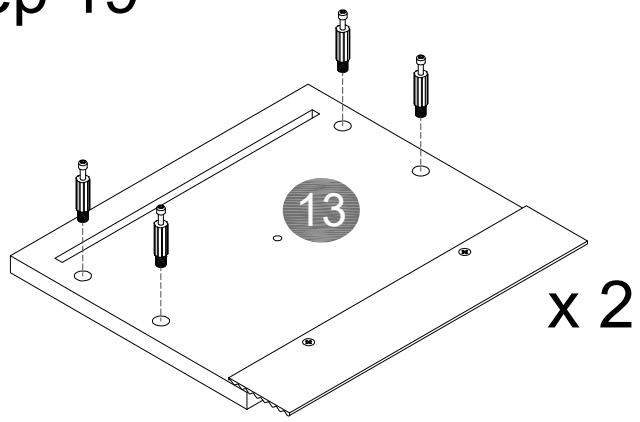

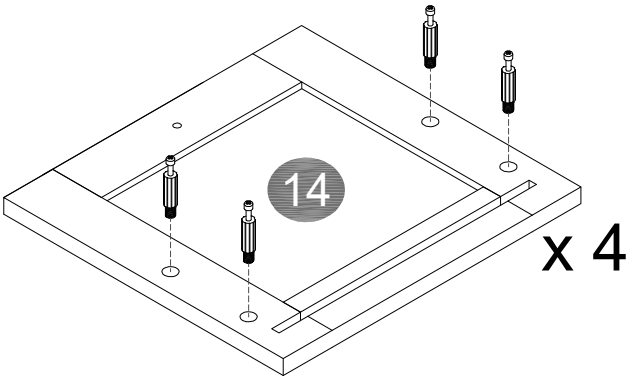

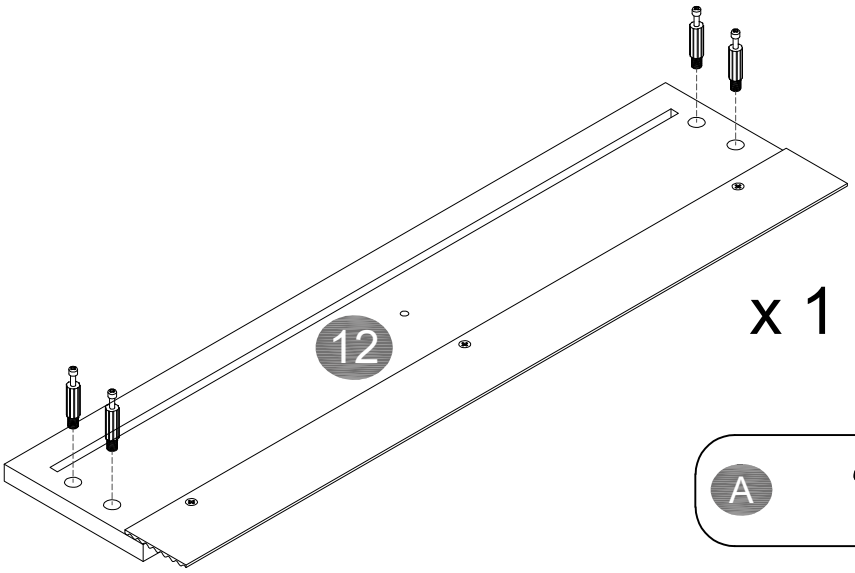

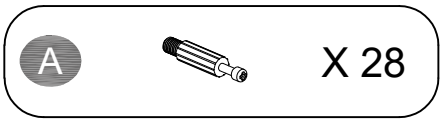

Step 20

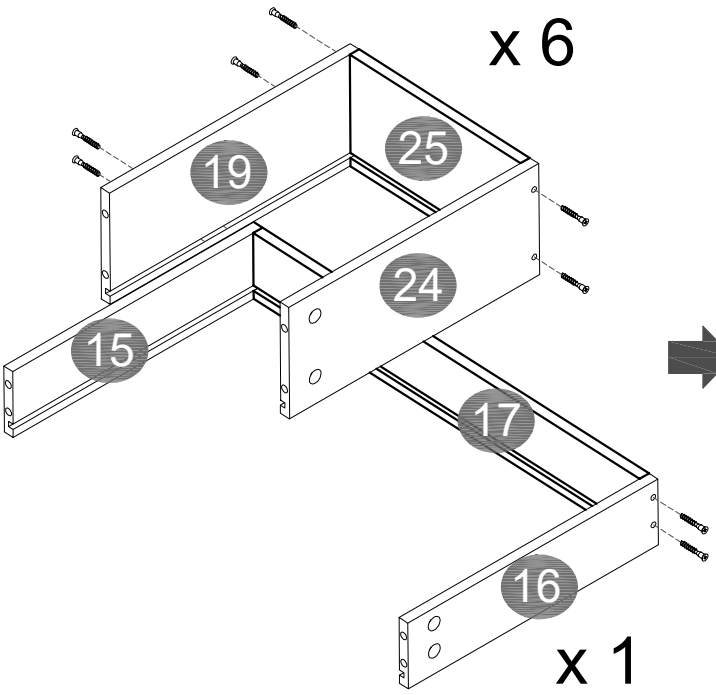

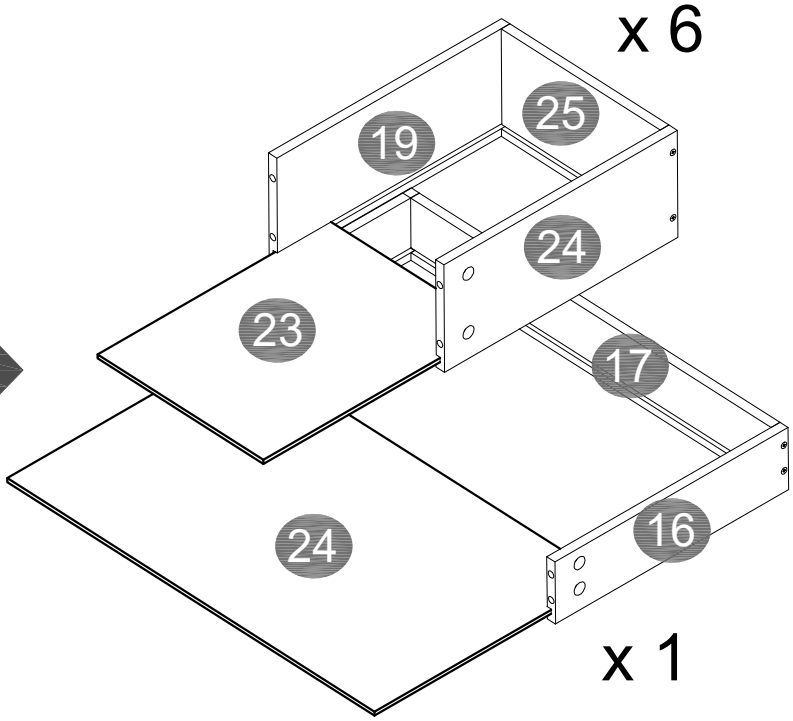

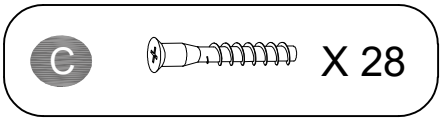

Step 21

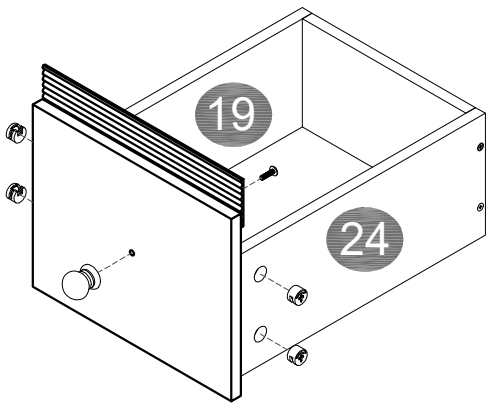

x 2

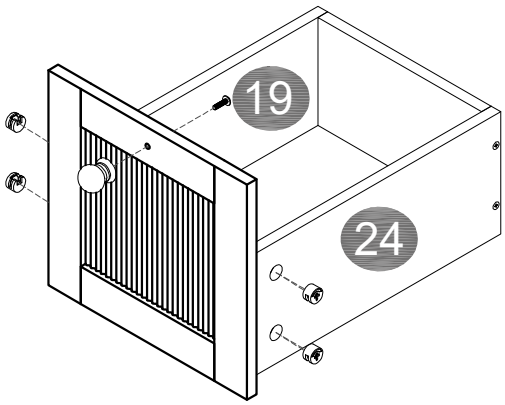

x 4

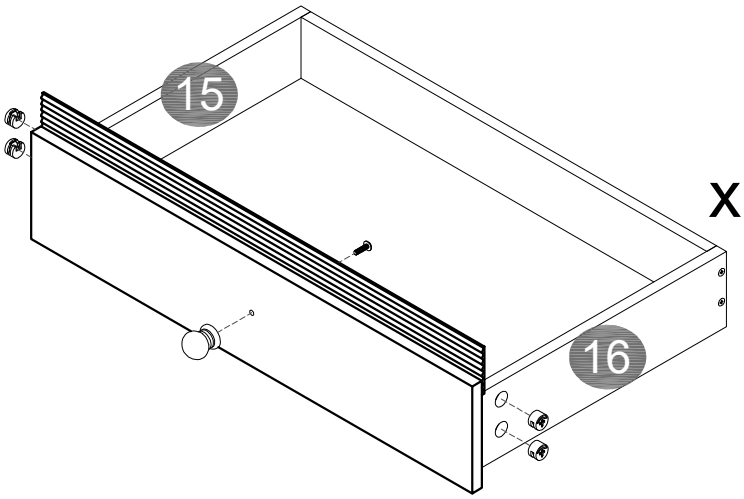

x 1

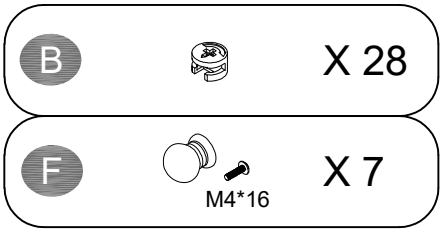

Step 22

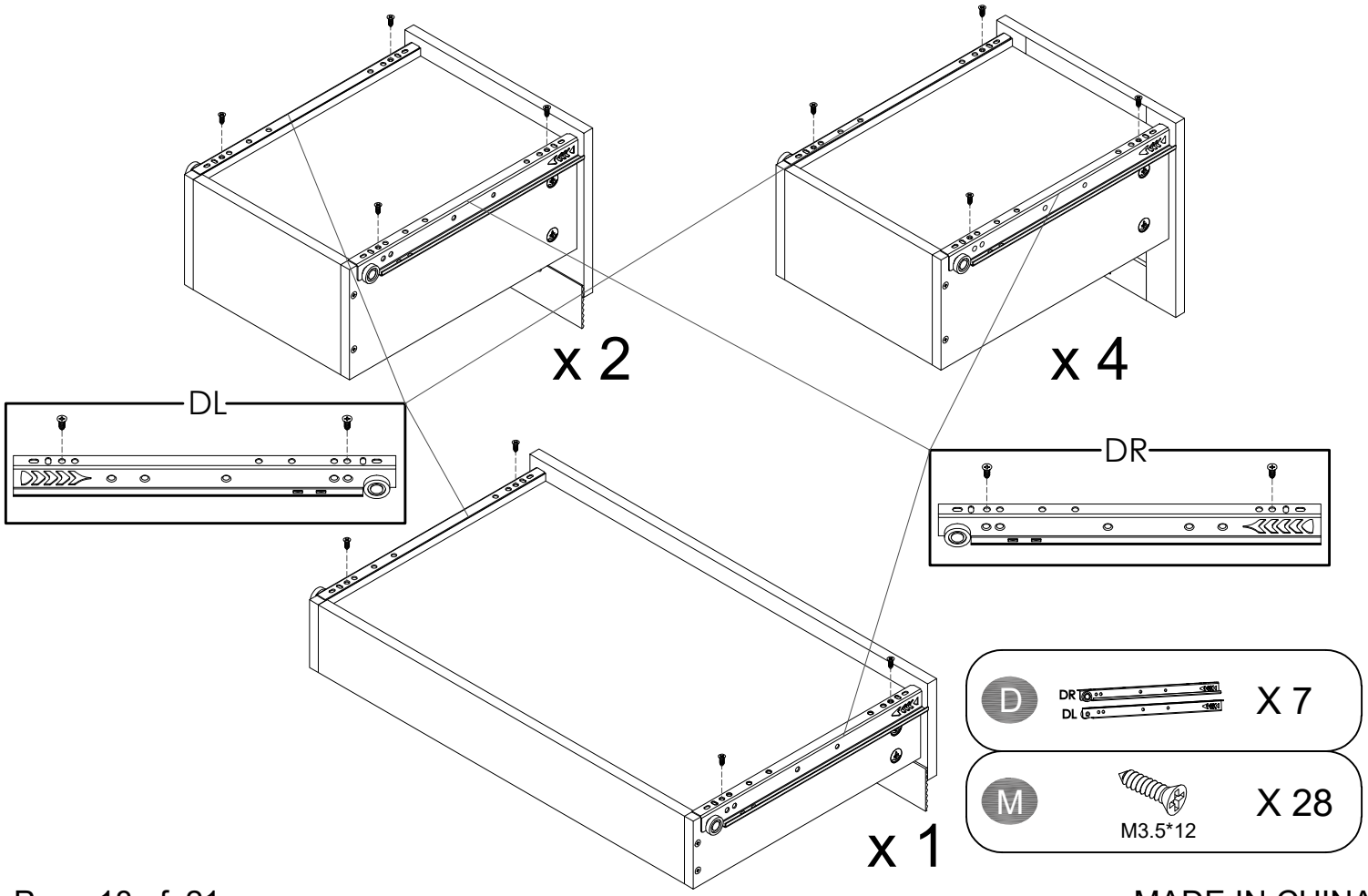

MADE IN CHINA

Step 23

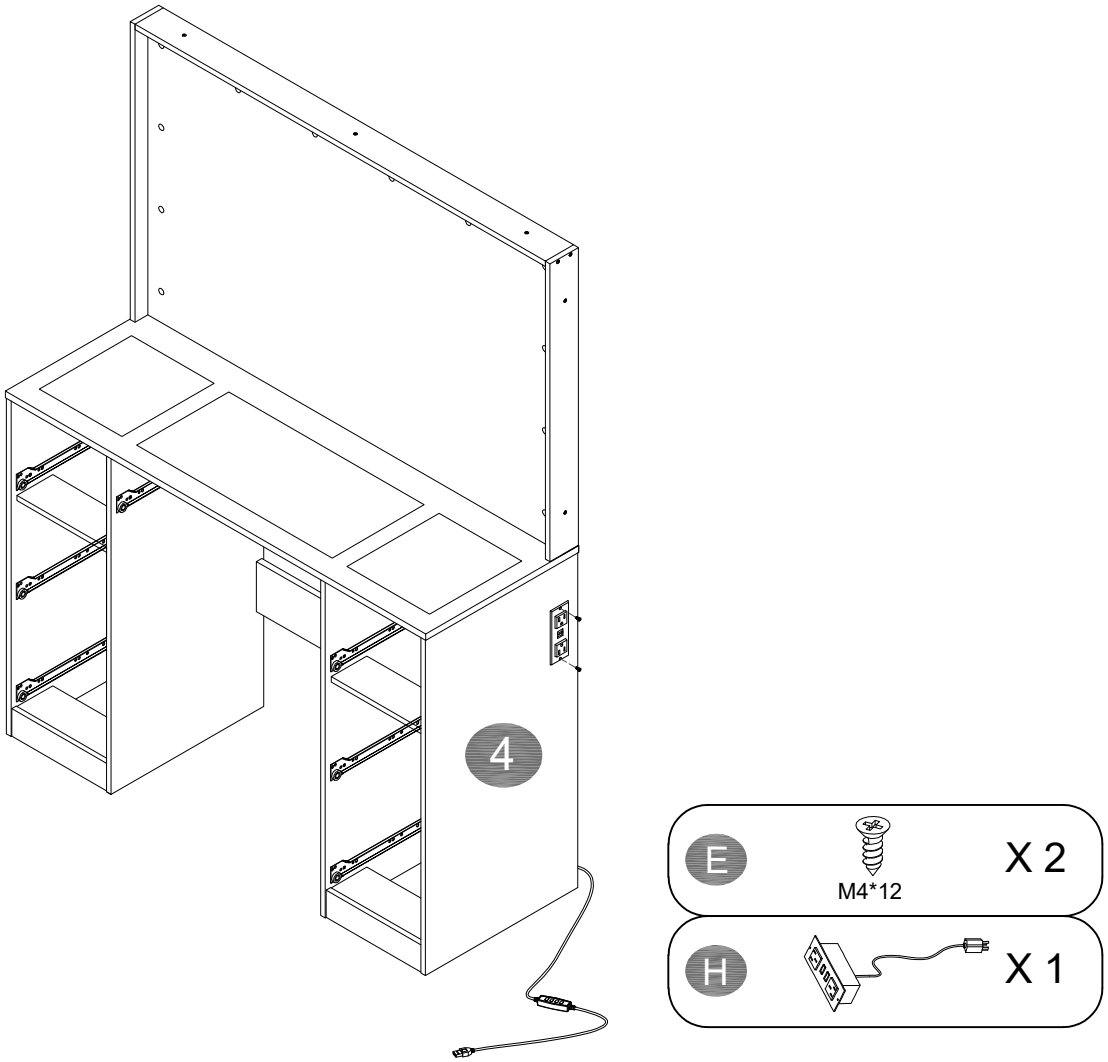

Step 24

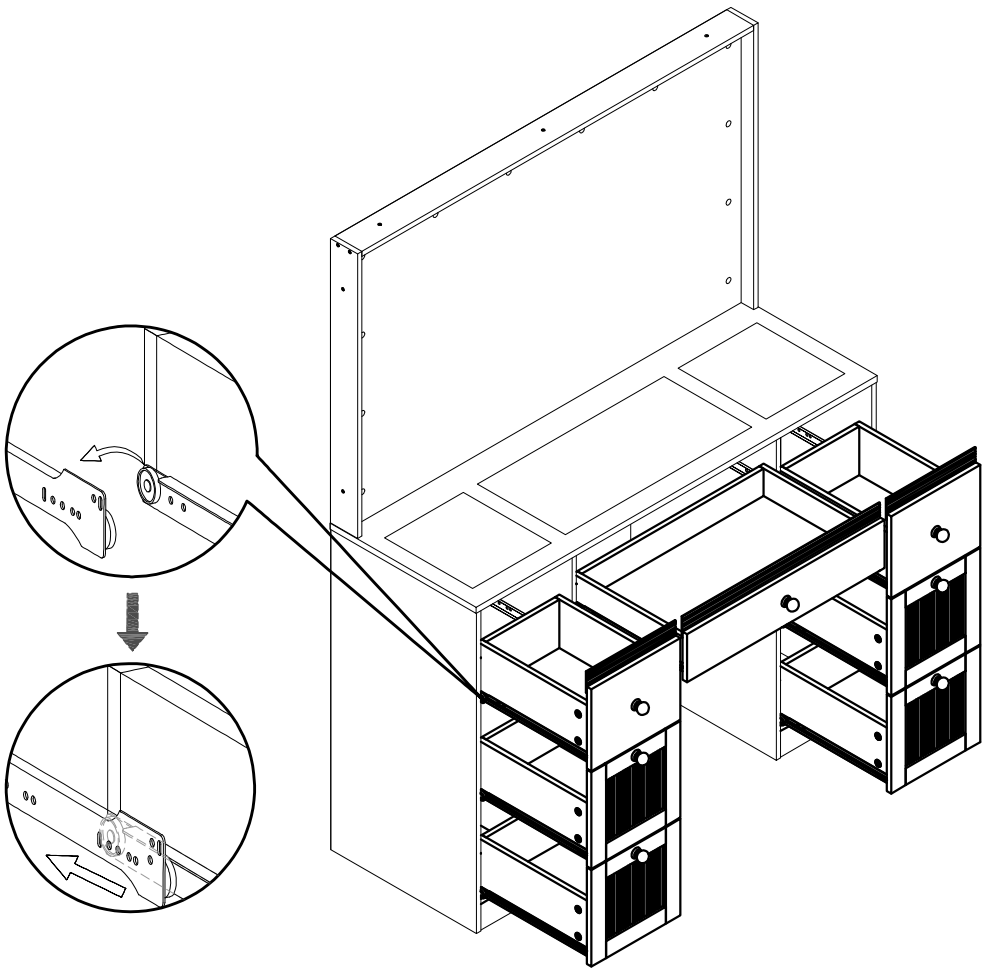

Step 25

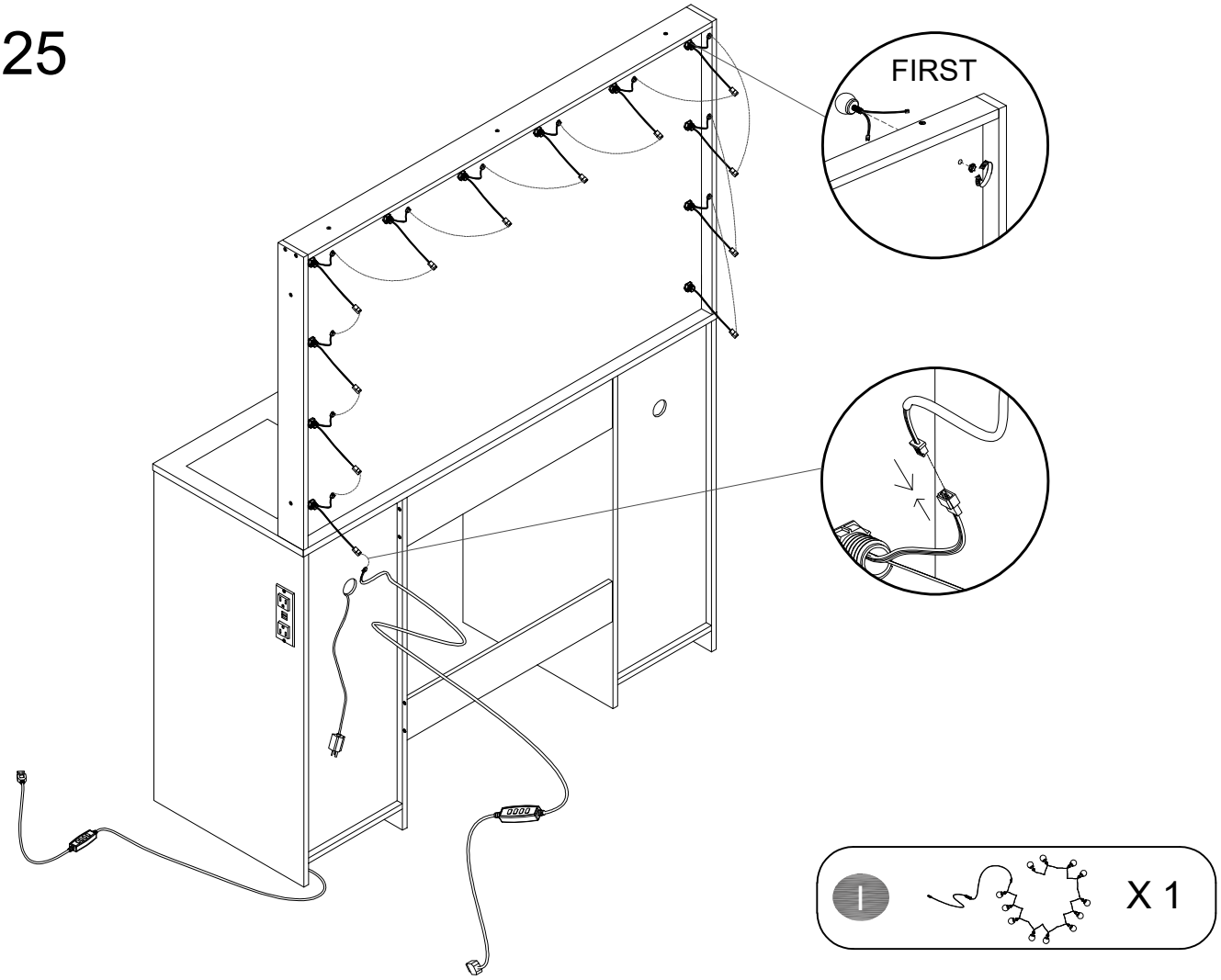

Step 26

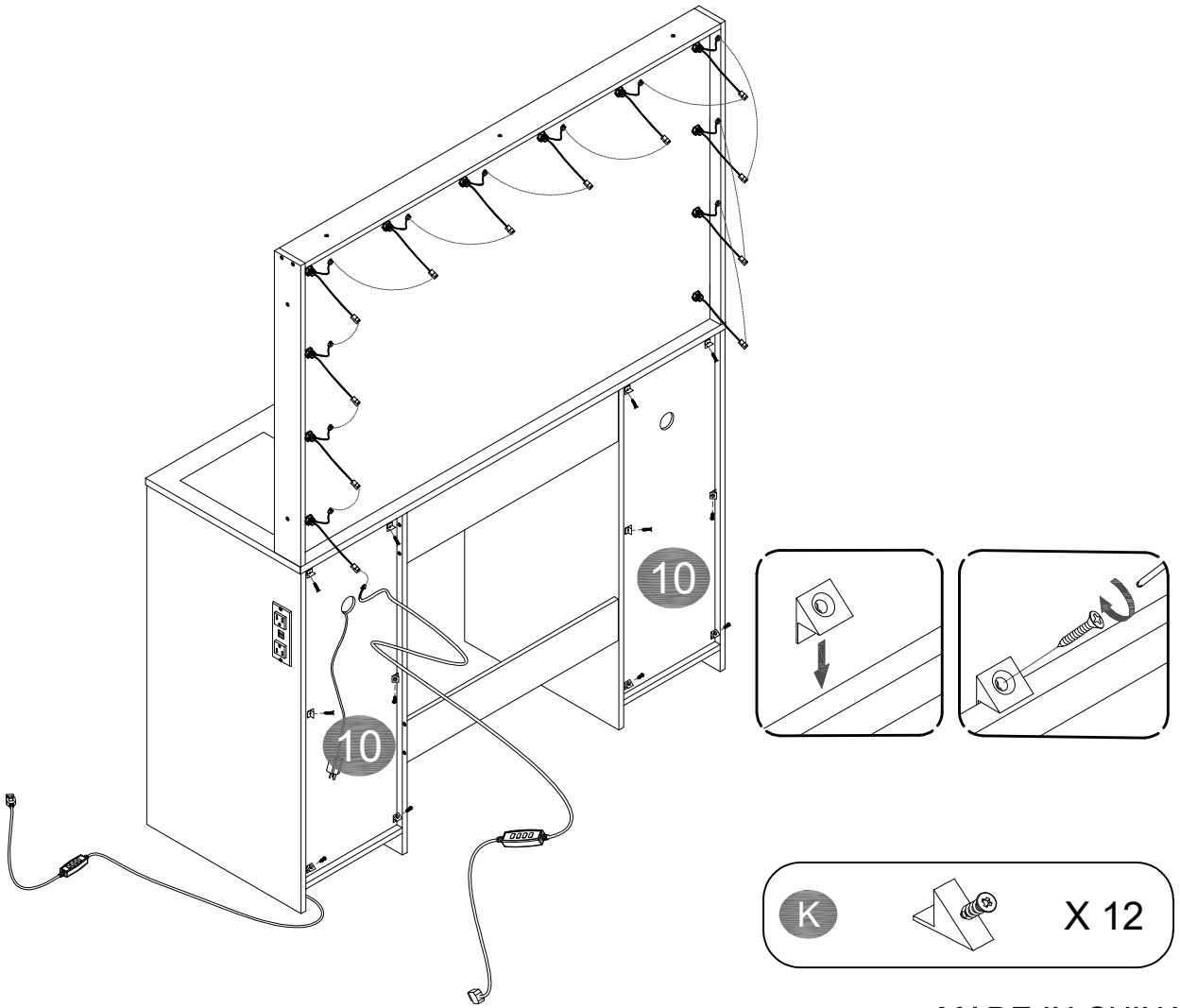

MADE IN CHINA

Step 27

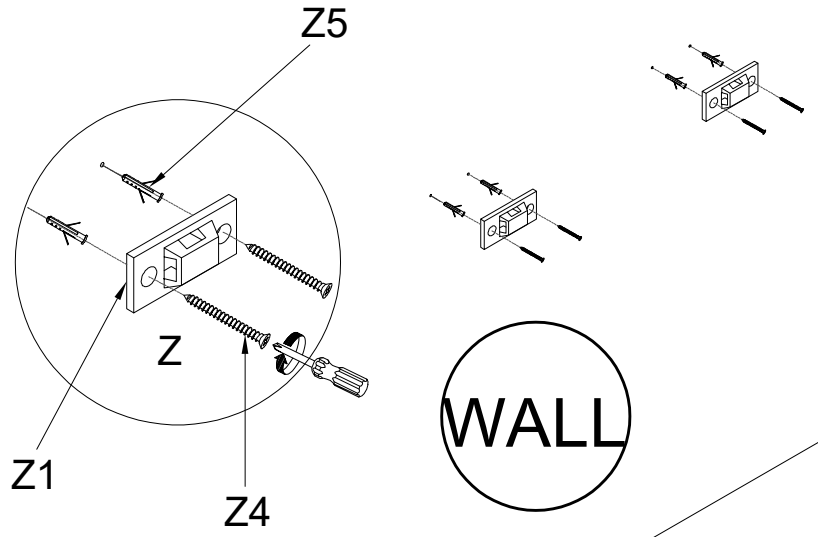

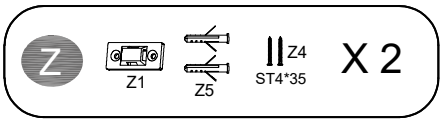
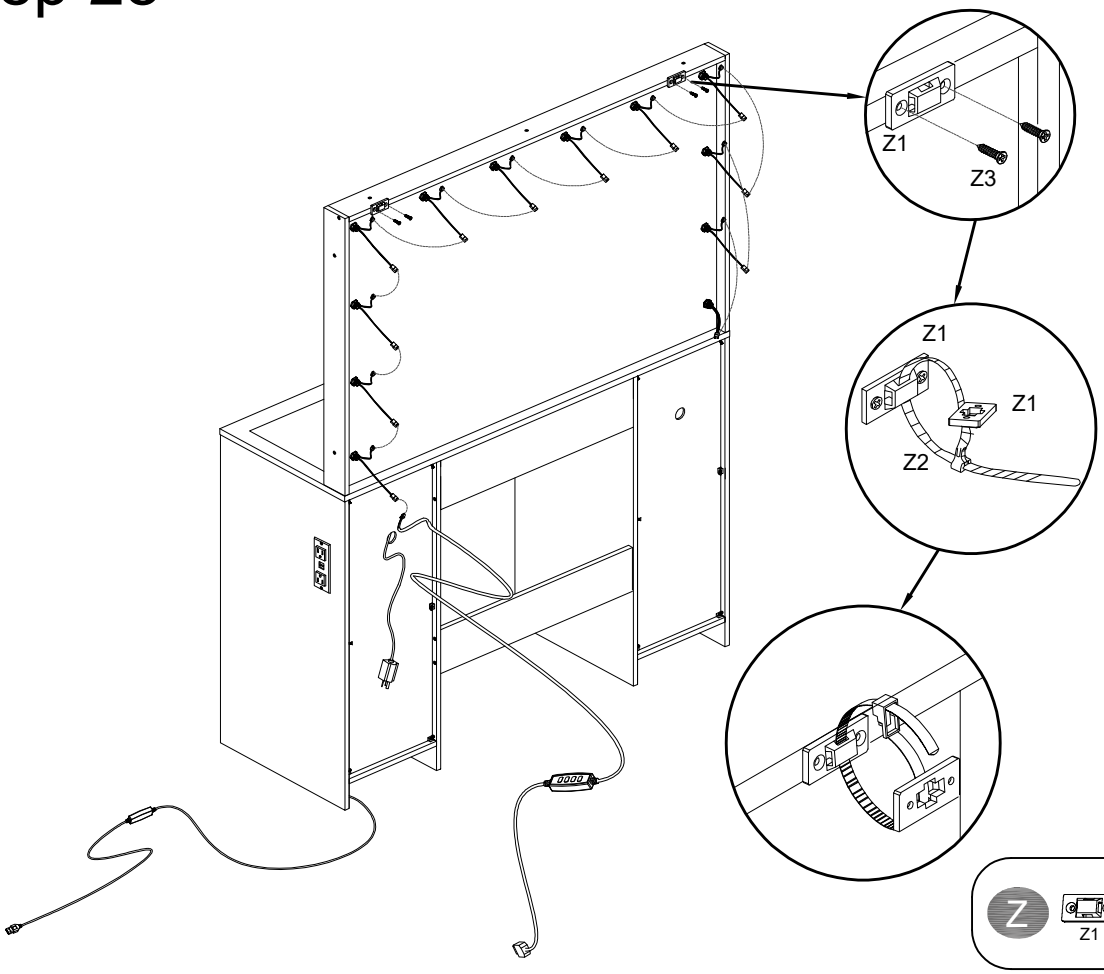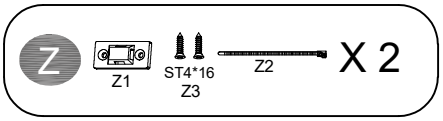
Step 28