# INSTALLATION INSTRUCTIONS

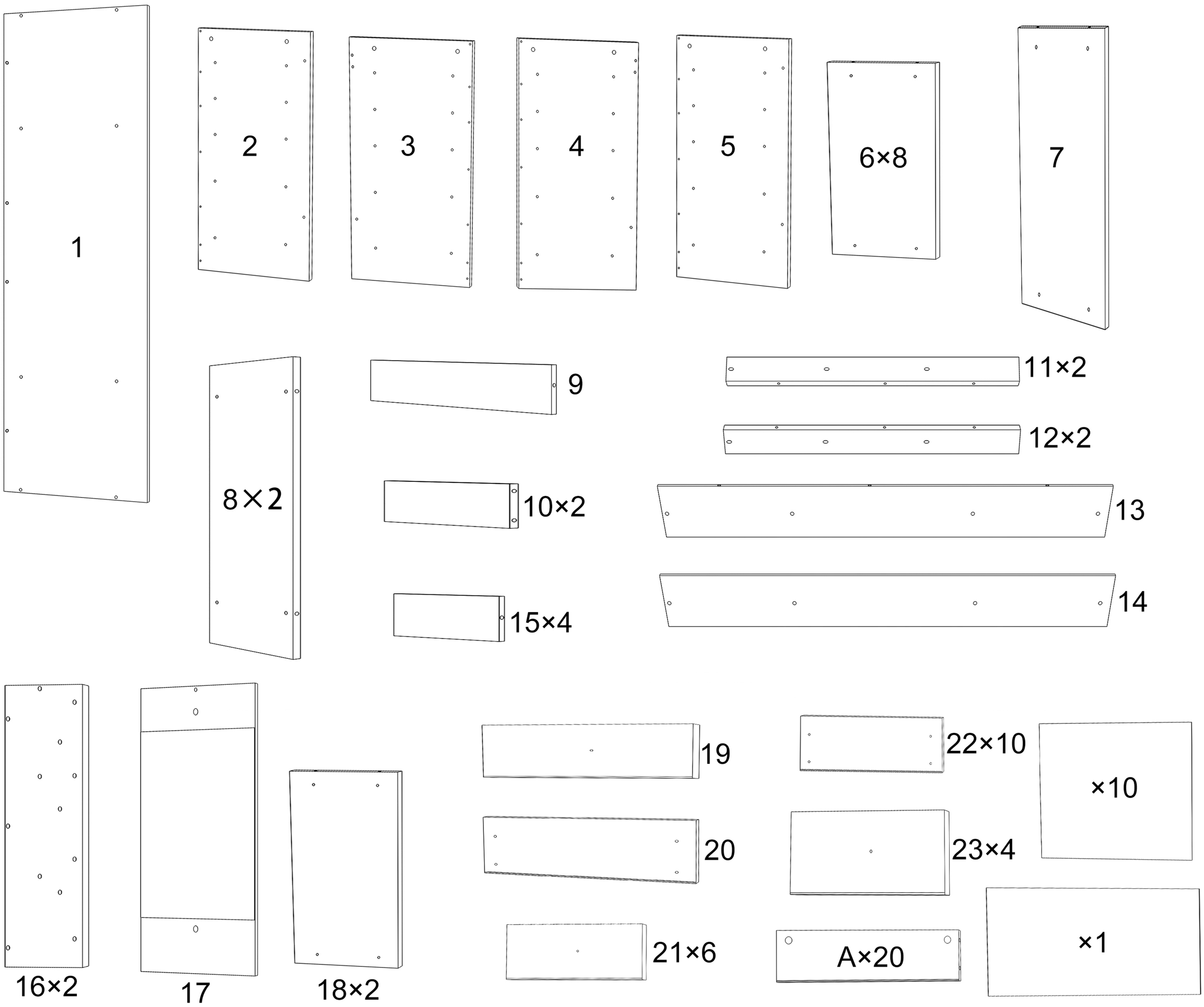


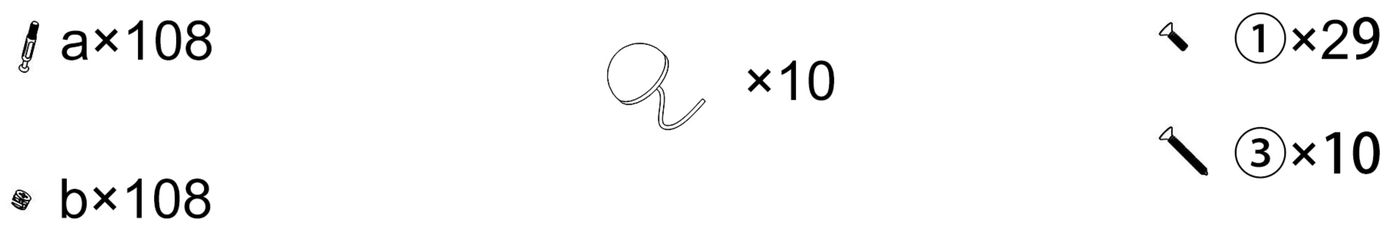

1

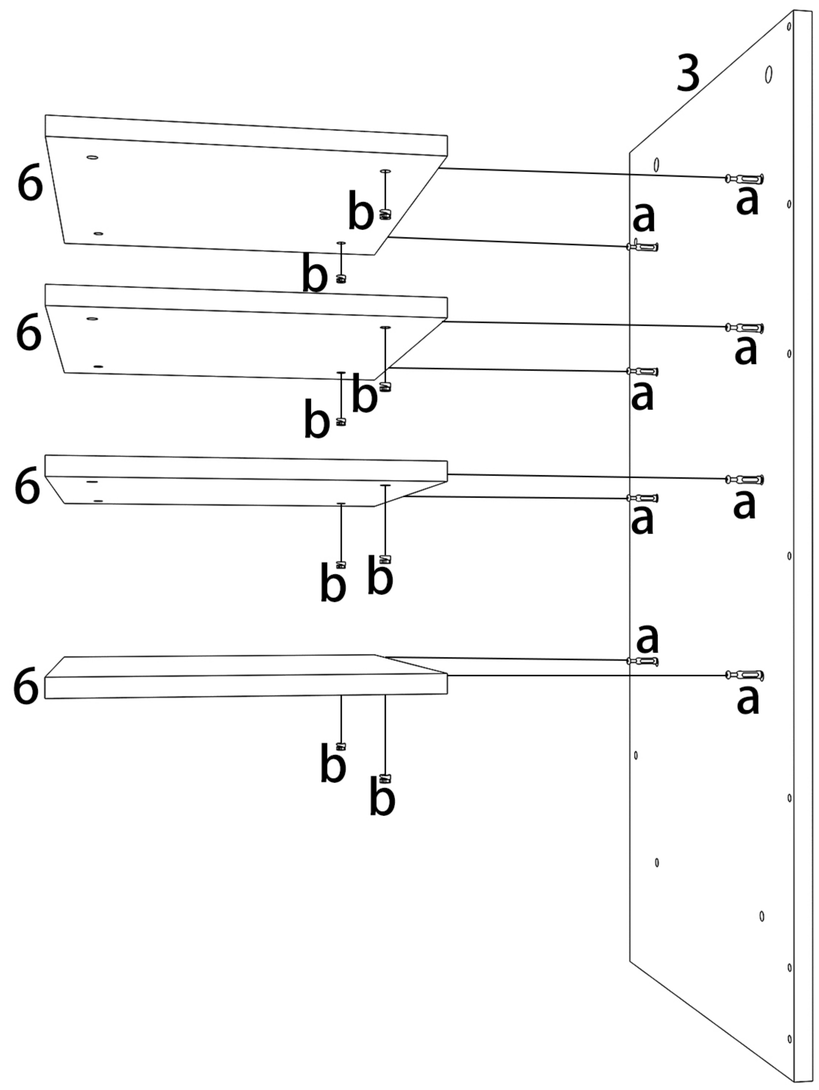
3
6
b
a
a
b
6
a
a
b
b
6
a
a
b
b
6
a
a
b
b

2

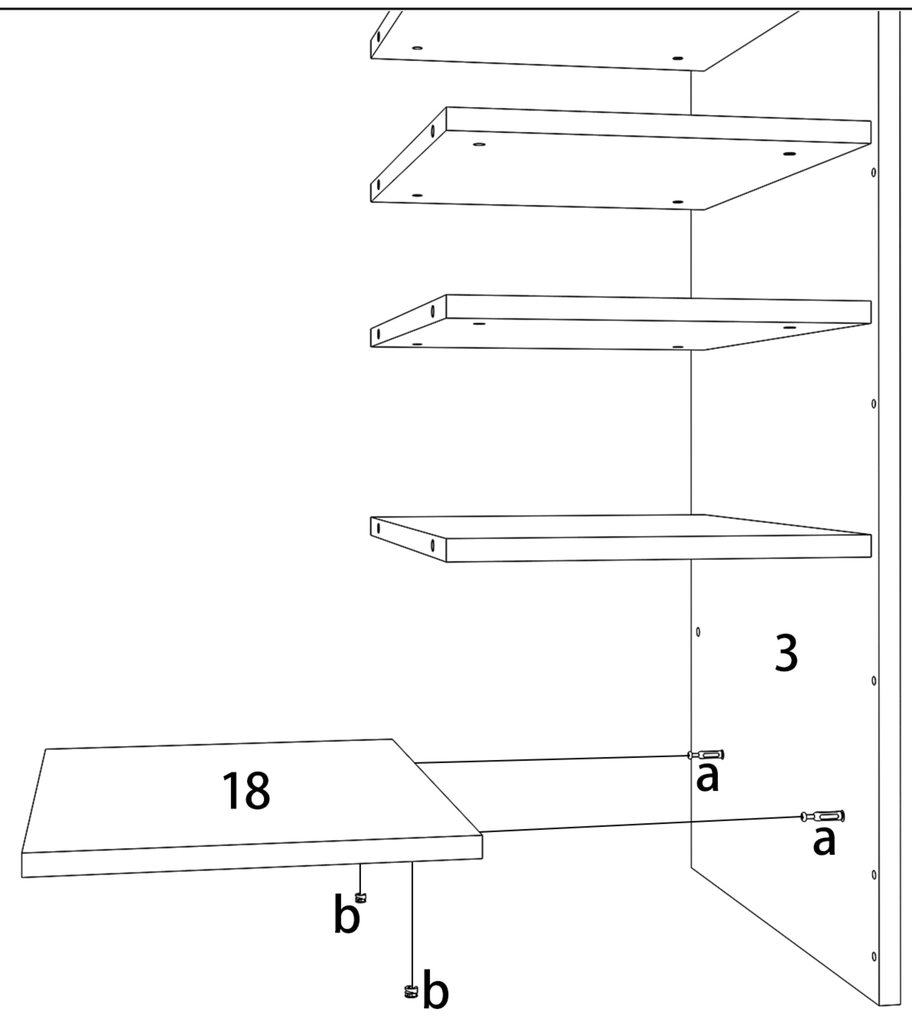
3
18
a
a
b
b

3

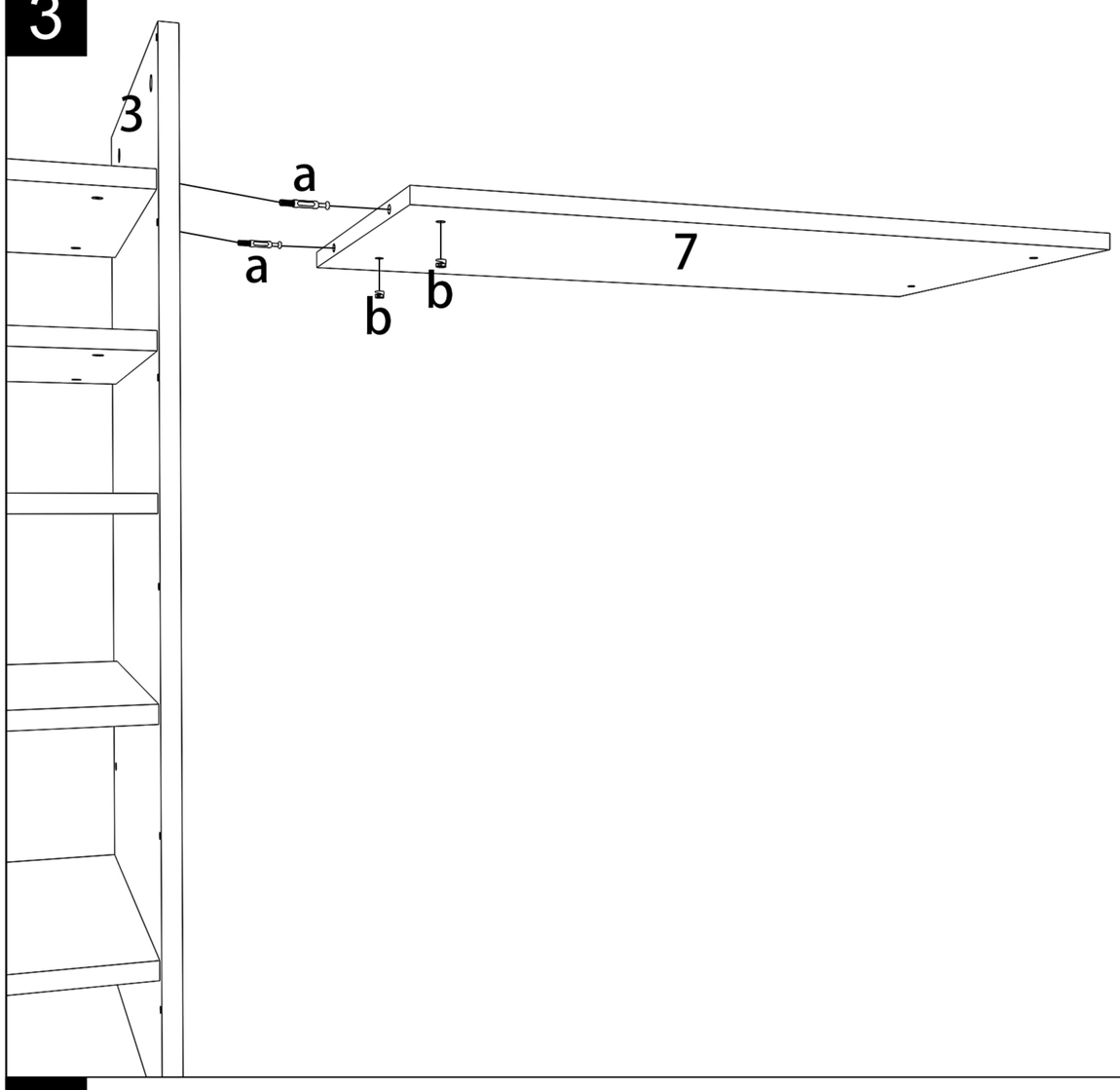
3
a
a
7
b
b

4

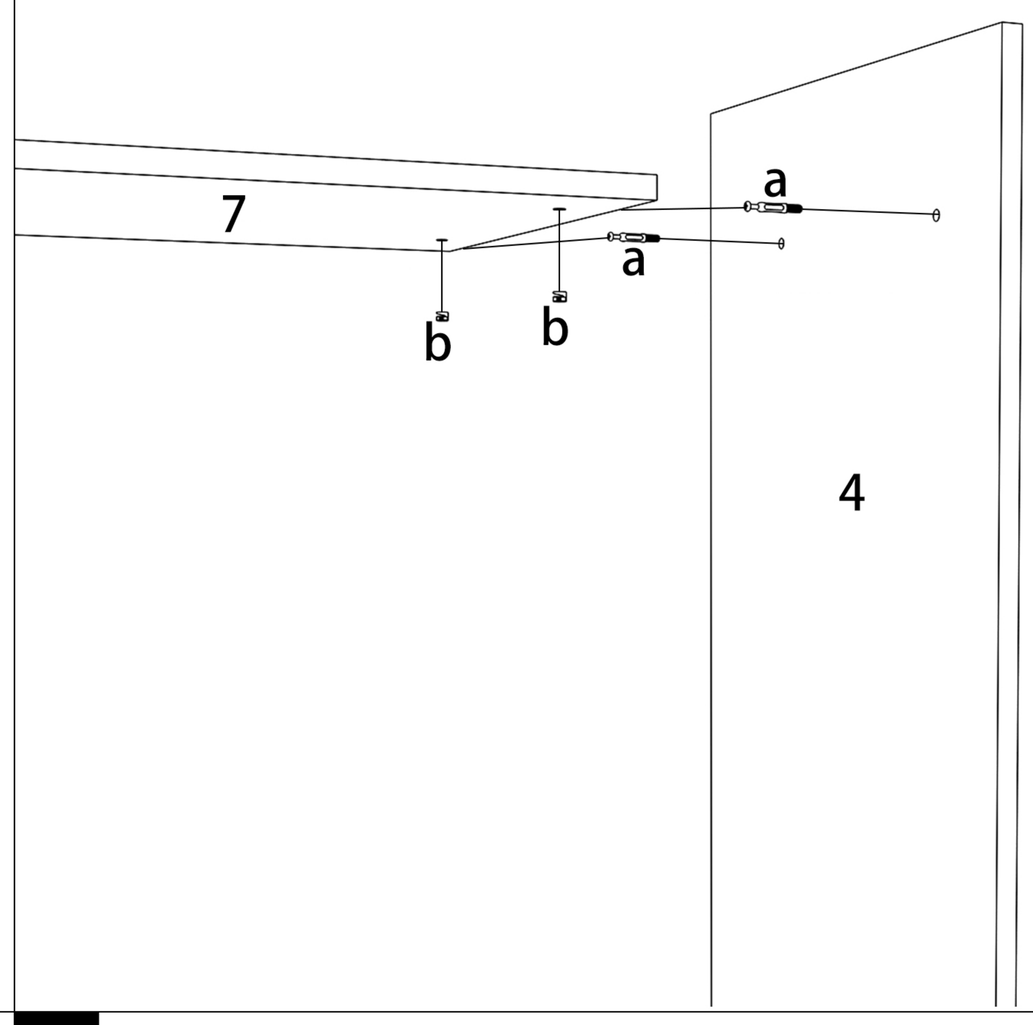
7
a
a
b
b
4

5

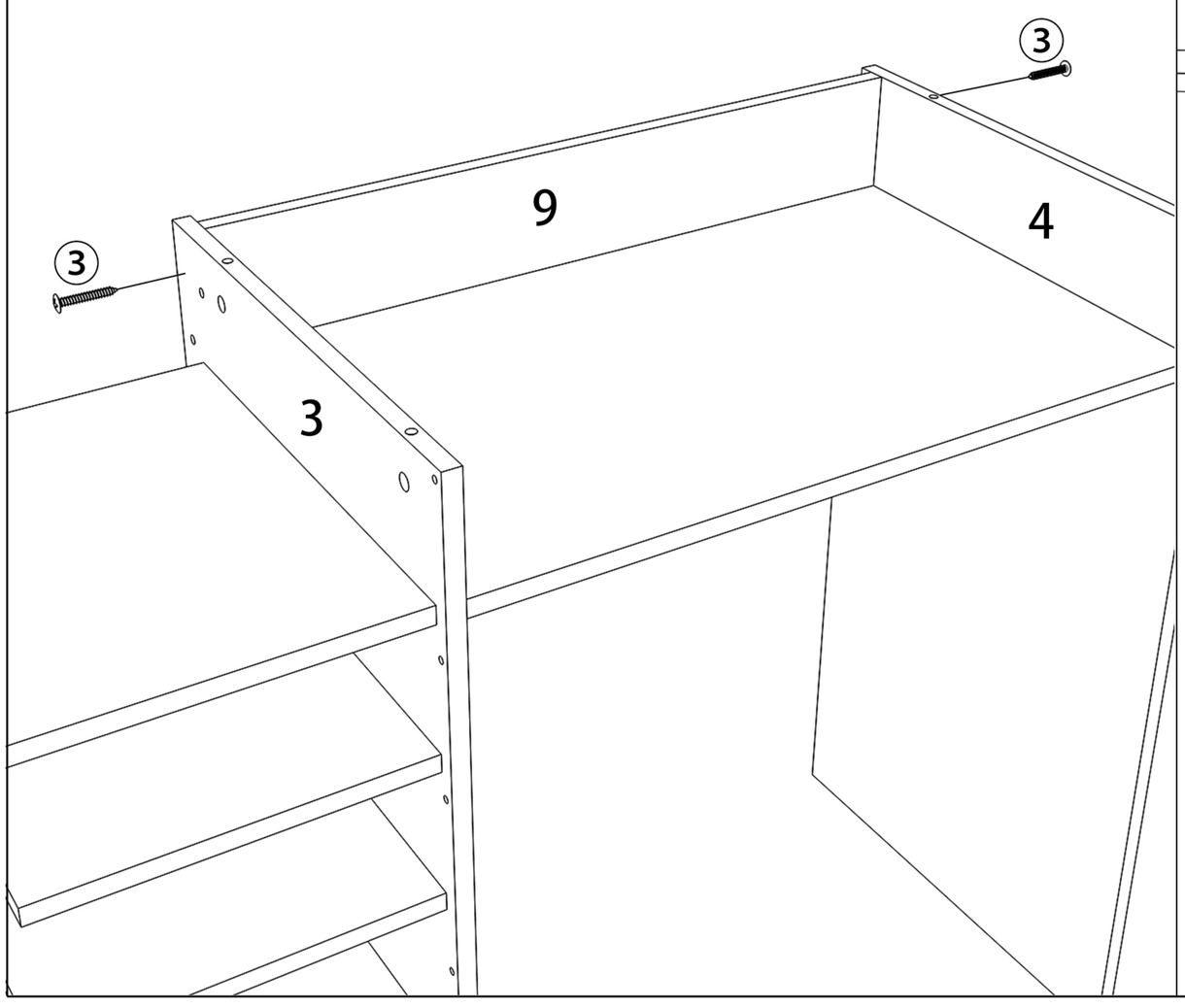
3
9
4
3
3

6

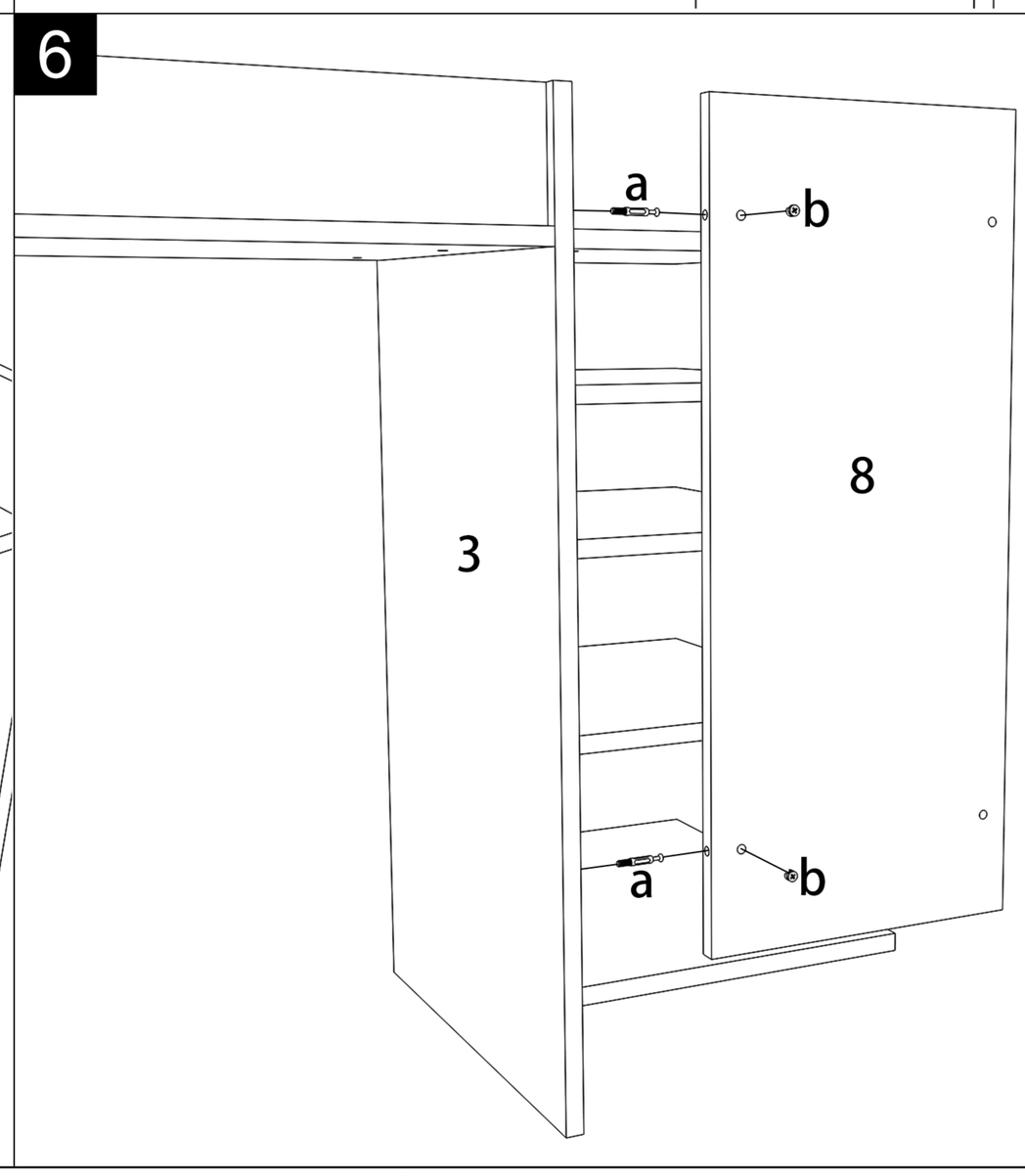
a
b
8
3
a
b

7

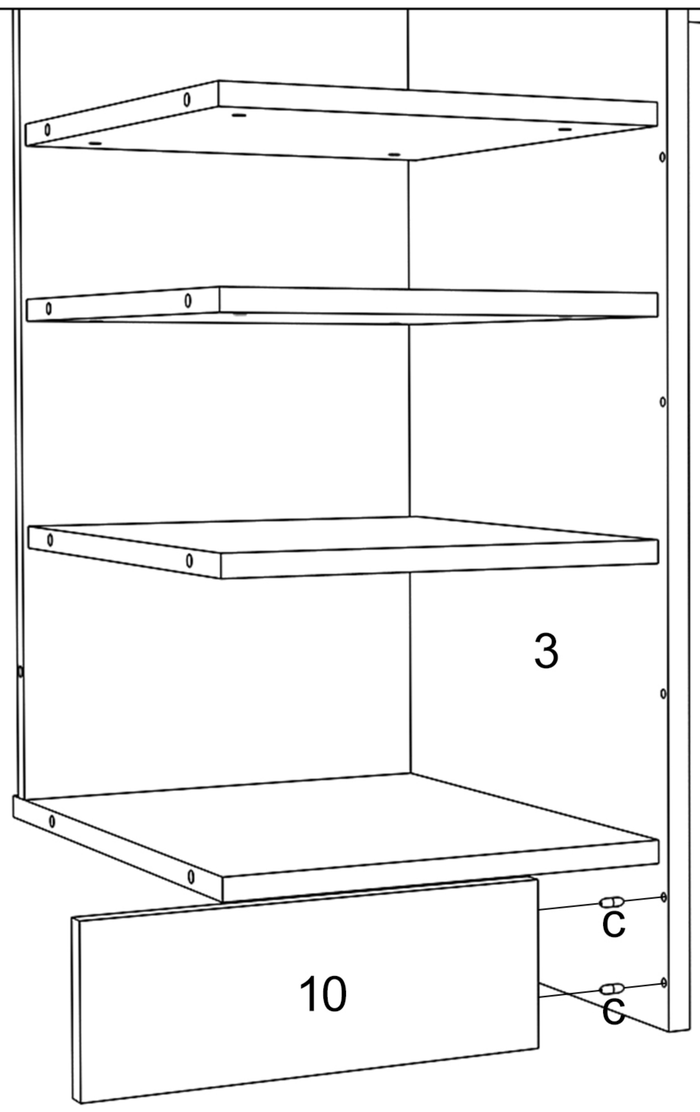
3
c
10
c

8

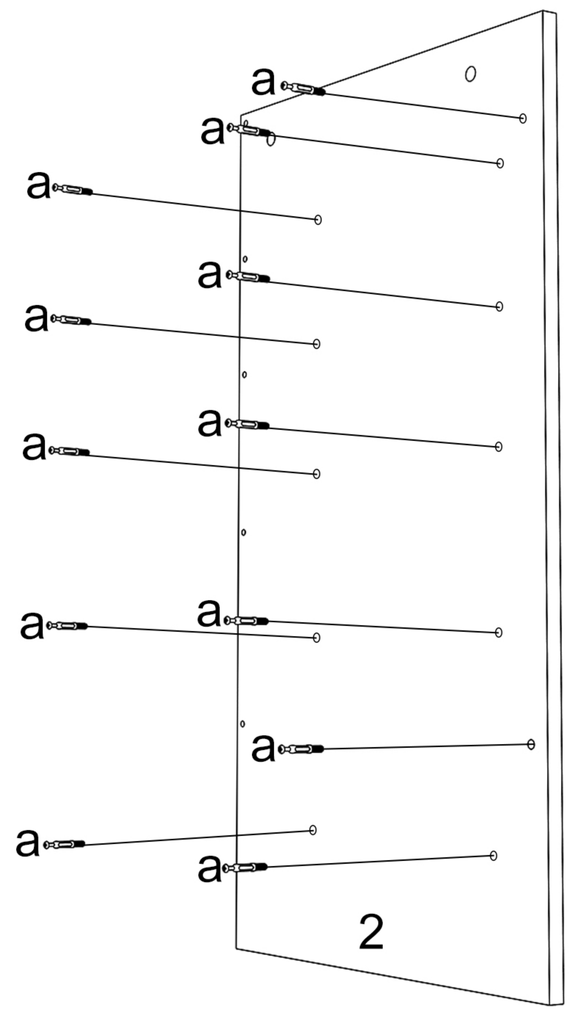
a
a
a
a
a
a
a
a
a
a
a
a
2

9

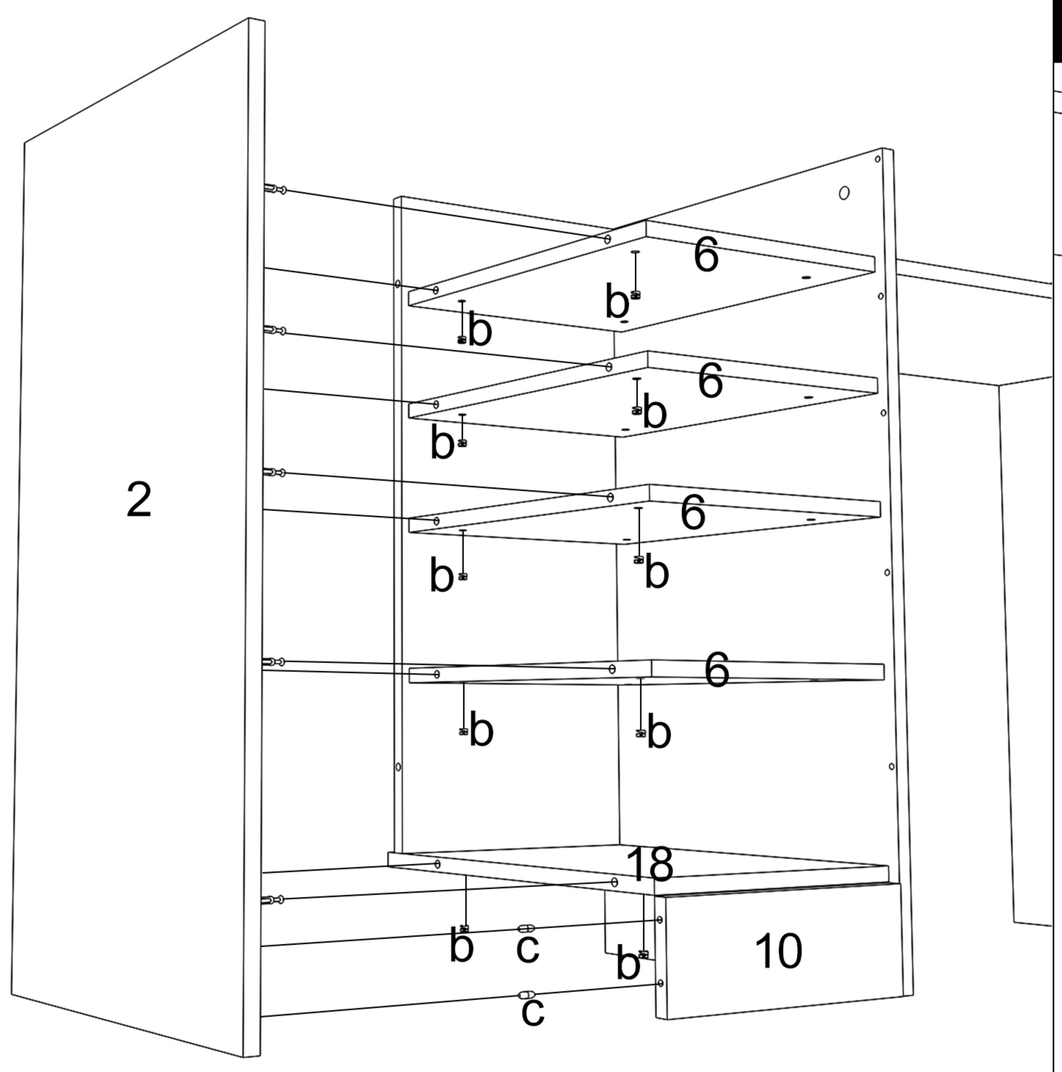
6
b
b
6
b
b
2
6
b
b
6
b
b
18
b
c
b
10
c

10

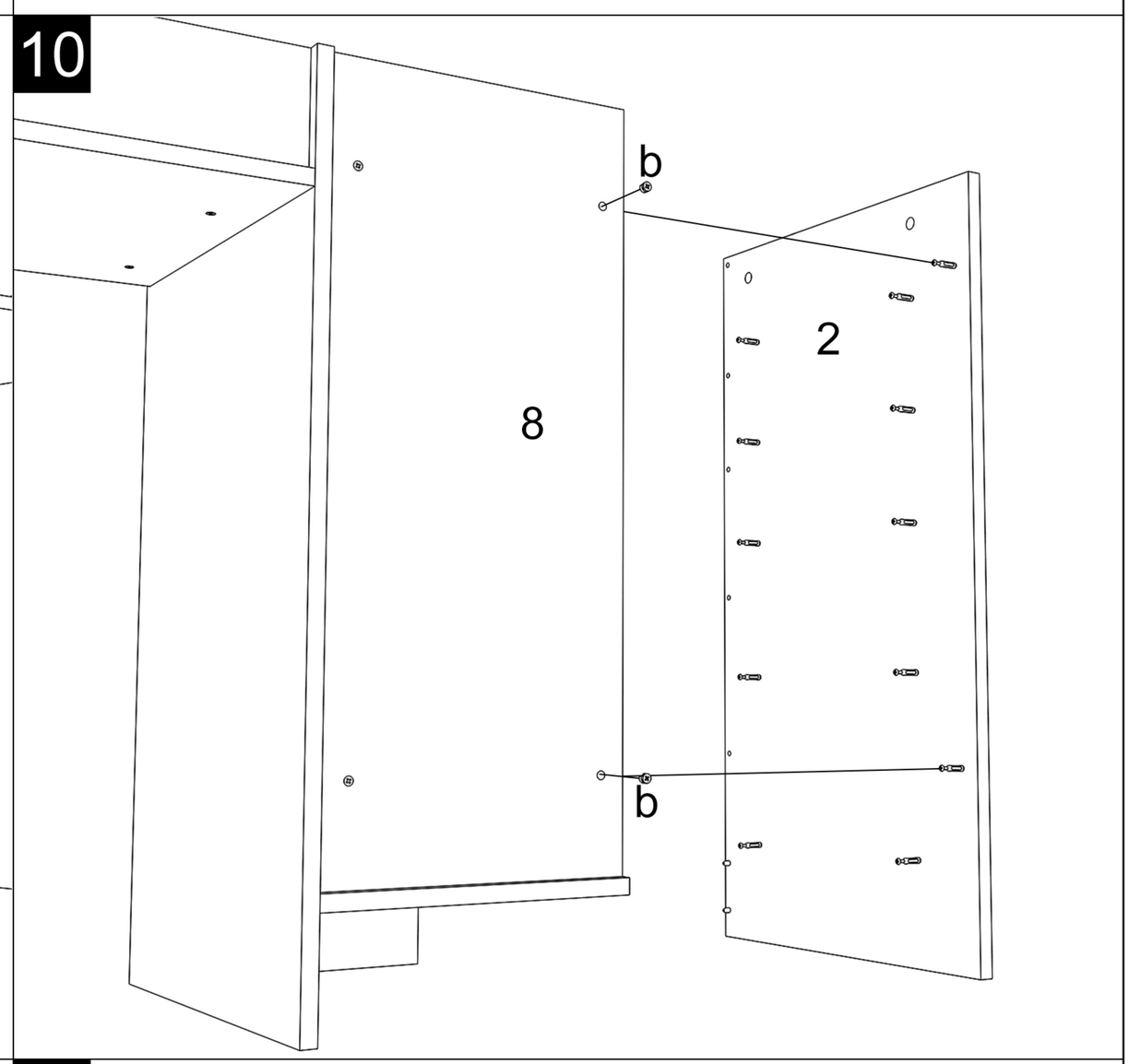
b
2
8
b

11

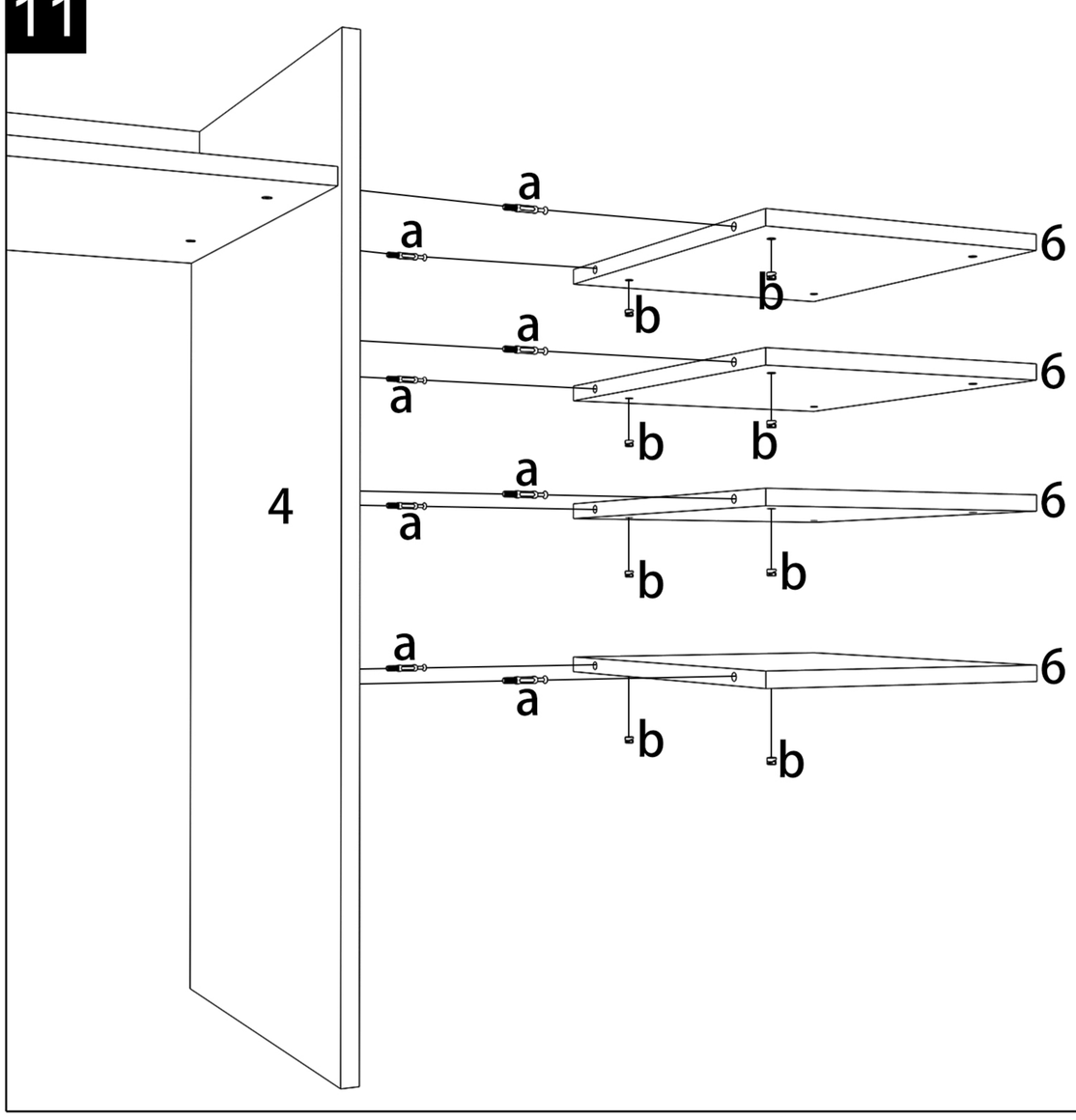
a
a
6
b
b
a
a
6
b
b
4
a
a
6
b
b
a
a
6
b
b

12

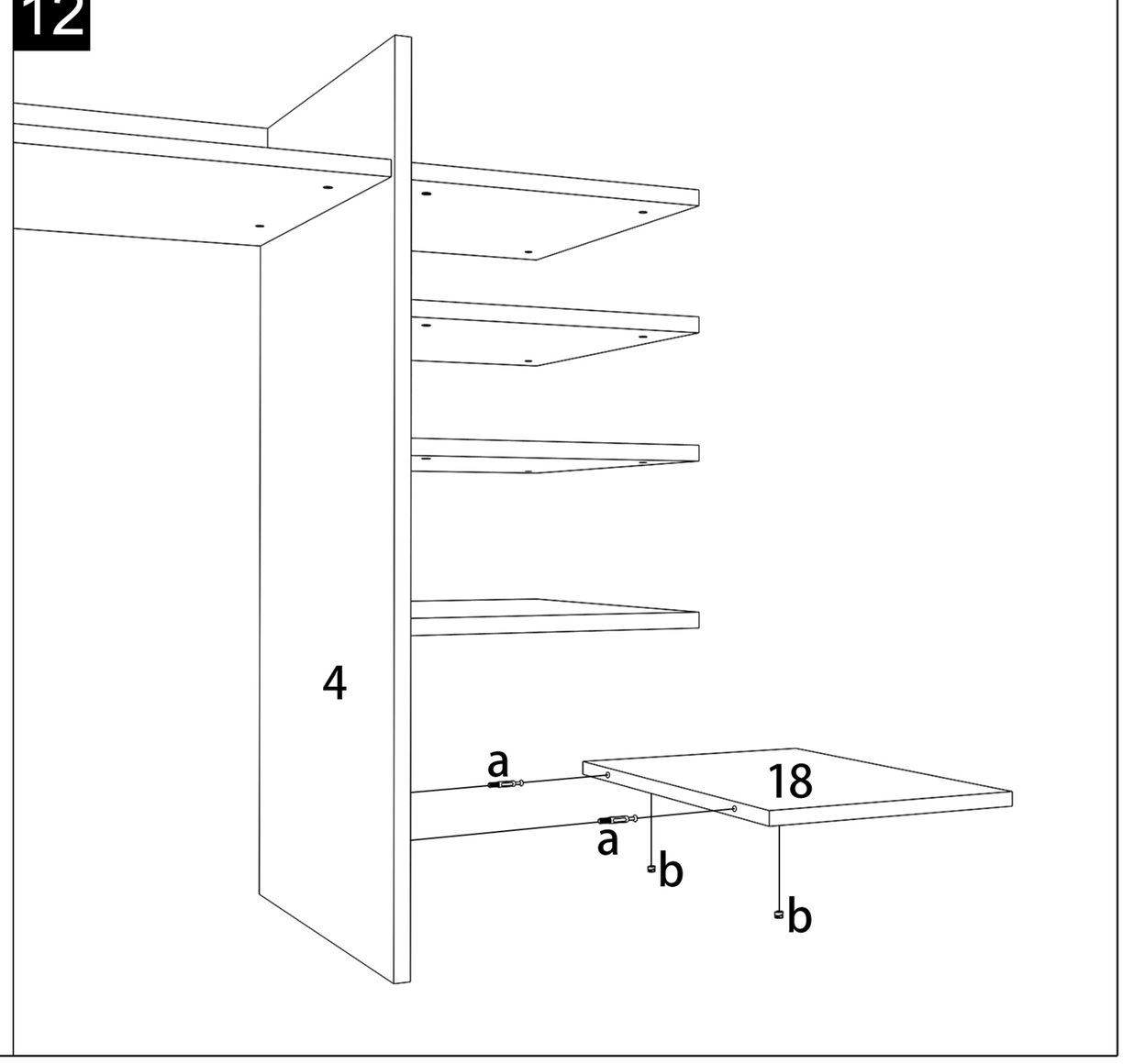
4
a
18
a
b
b

13

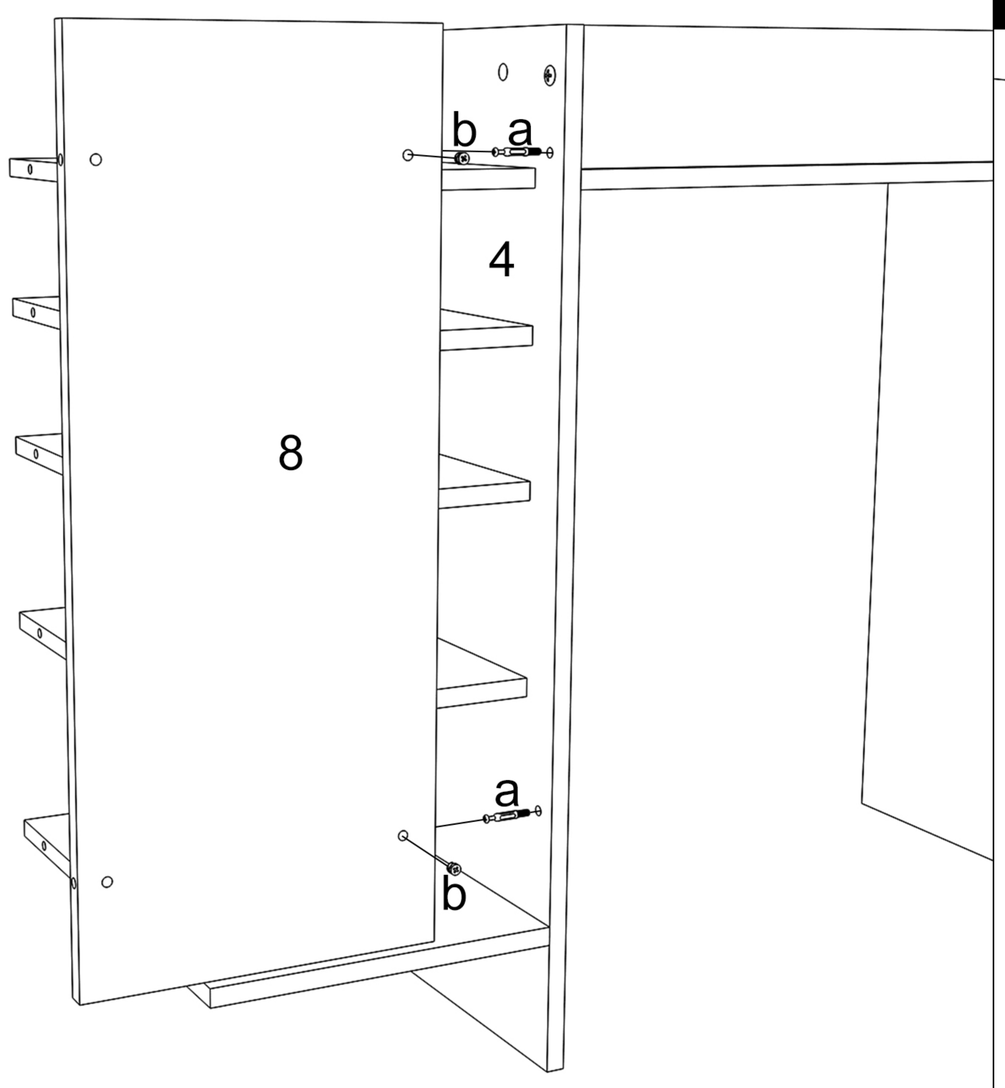
b
a
4
8
a
b

14

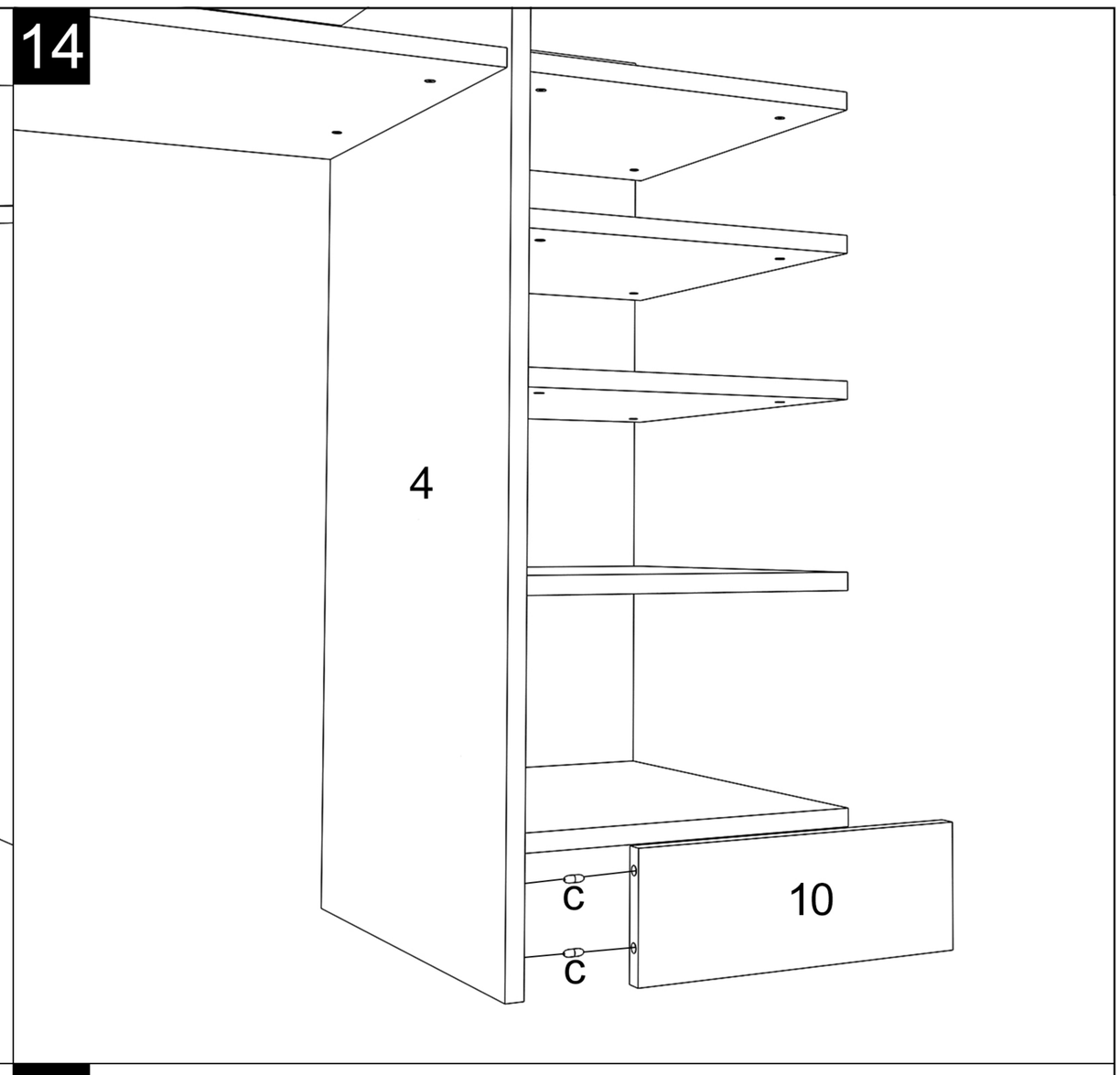
4
c
10
c

15

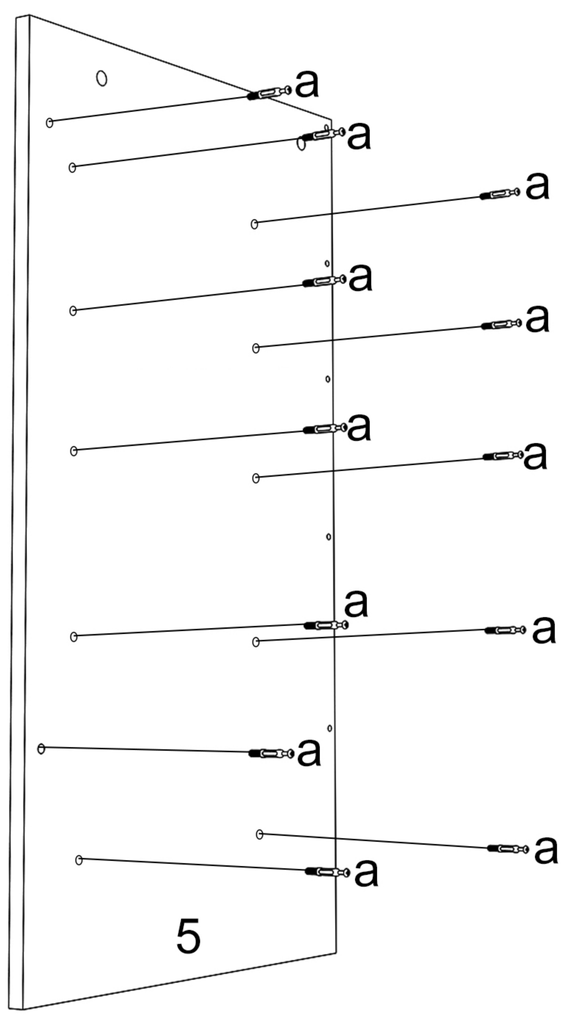
a
a
a
a
a
a
a
a
a
a
a
a
5

16

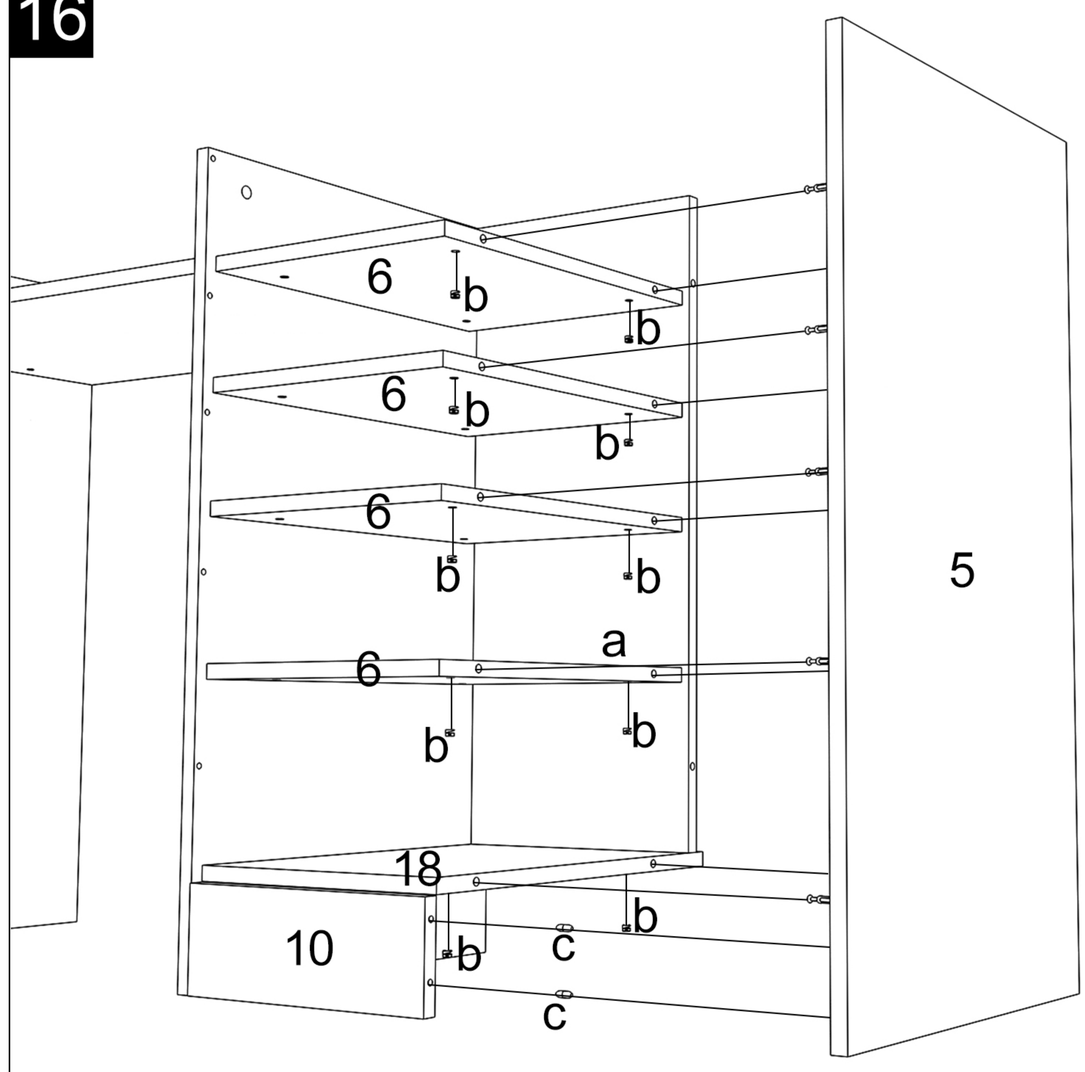
6
b
b
6
b
b
6
b
b
5
a
6
b
b
18
b
10
b
c
c

17

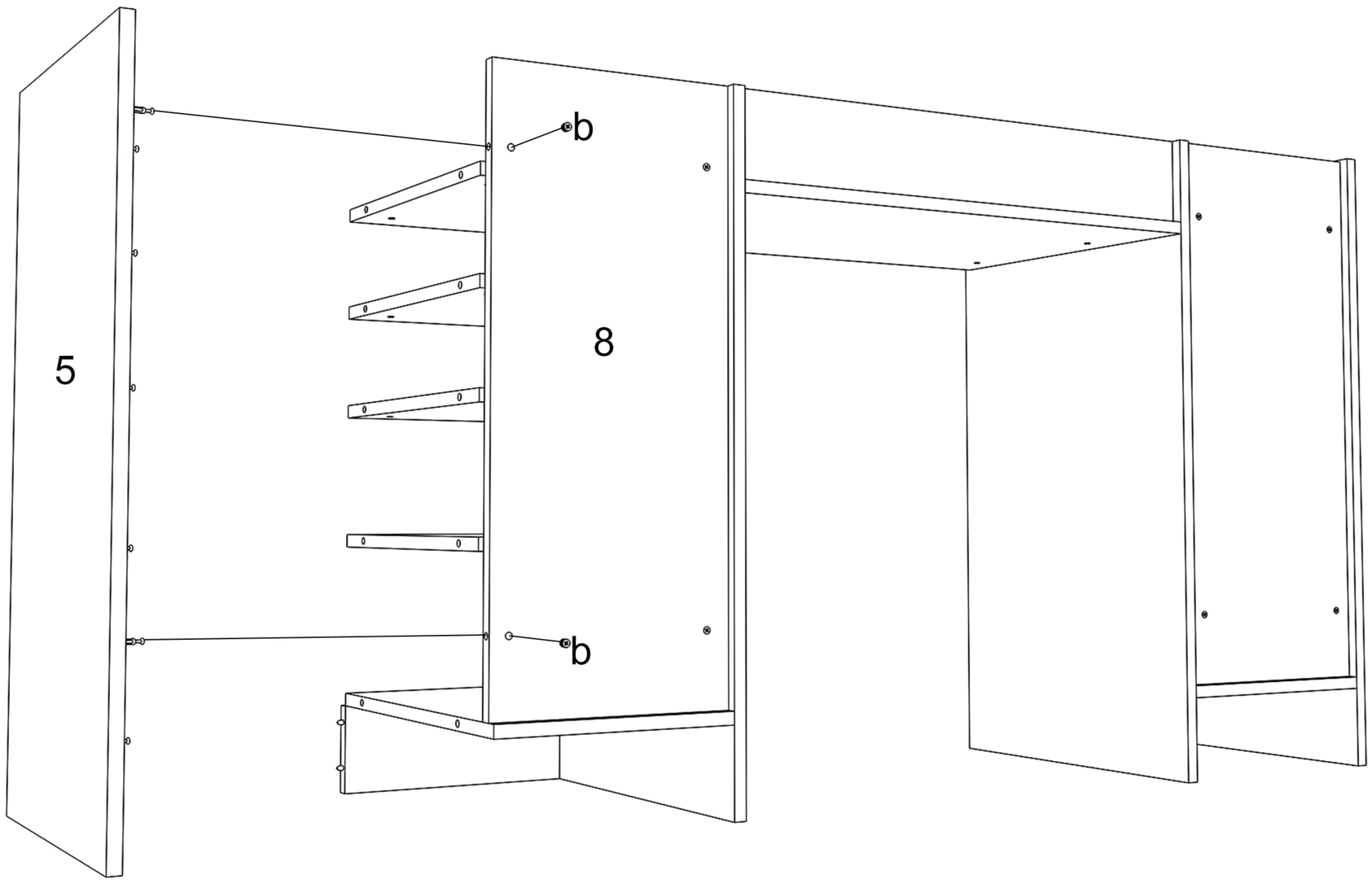
b
5
8
b

18

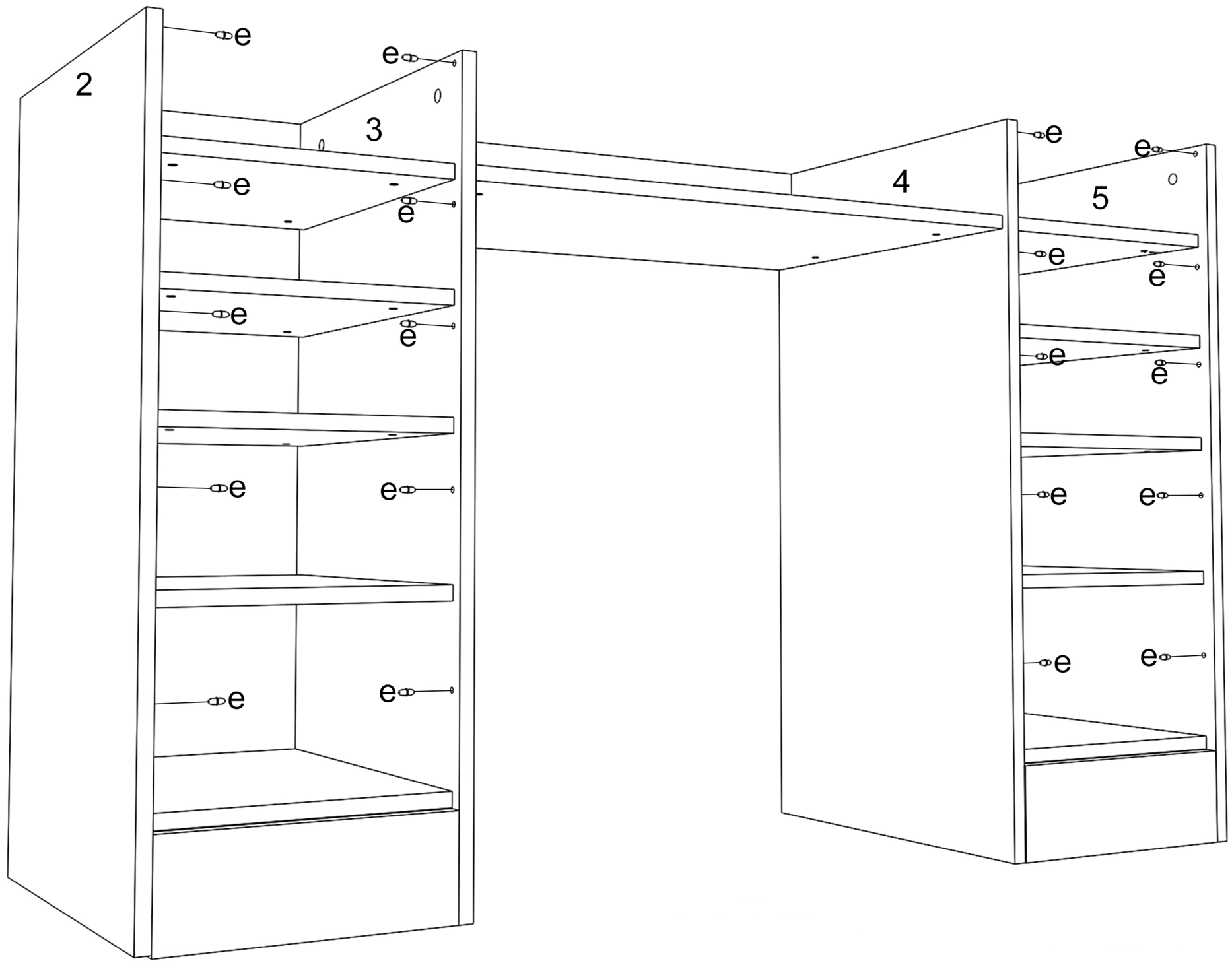


19

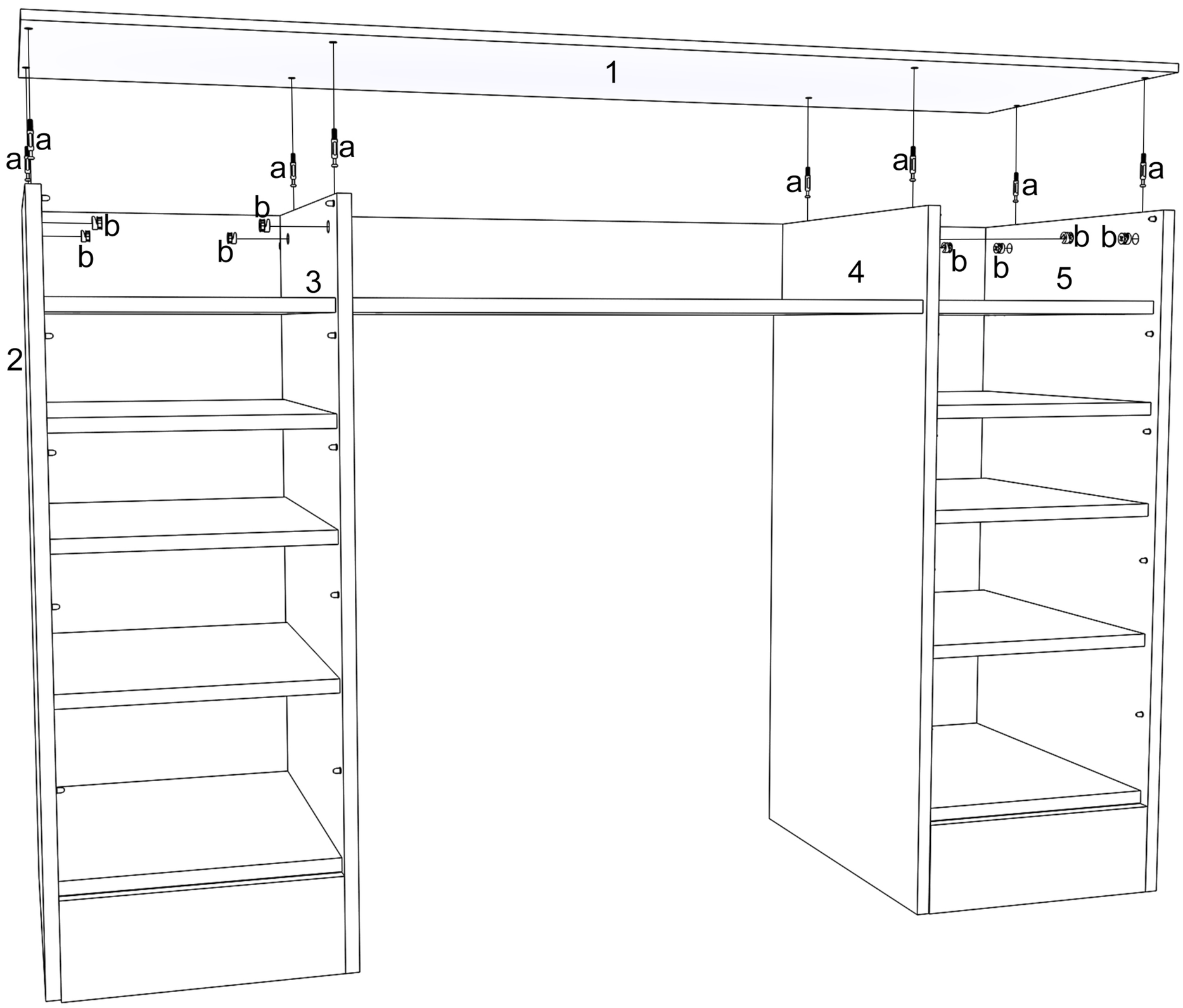

## 20

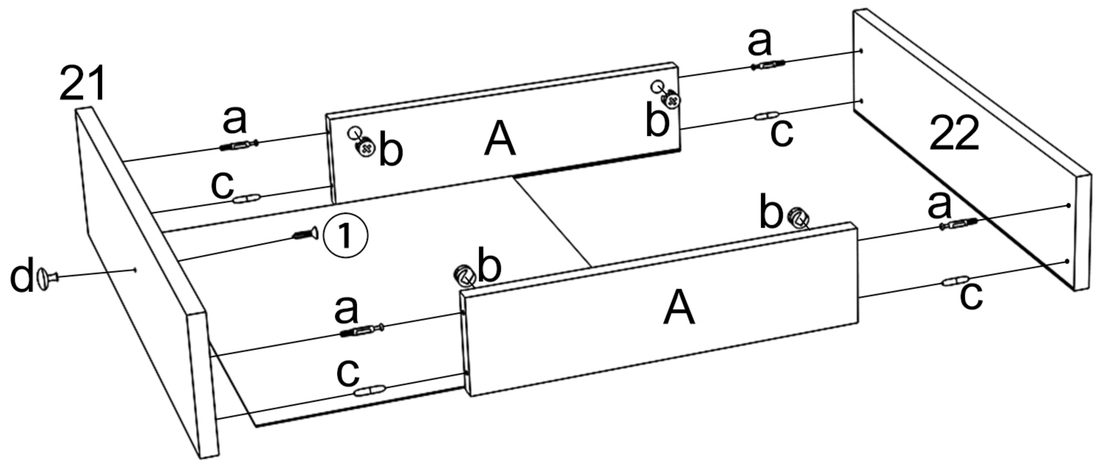
21
a
b
A
b
a
c
22
c
1
b
a
d
b
A
a
c
c

×6

## 21

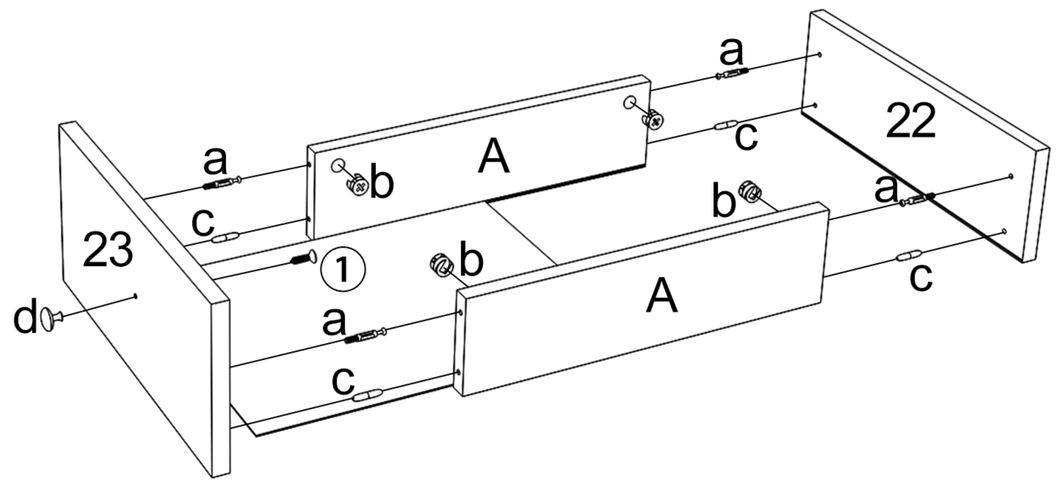
a
A
c
22
a
b
c
b
a
23
1
b
d
A
c
a
c

×4

## 22

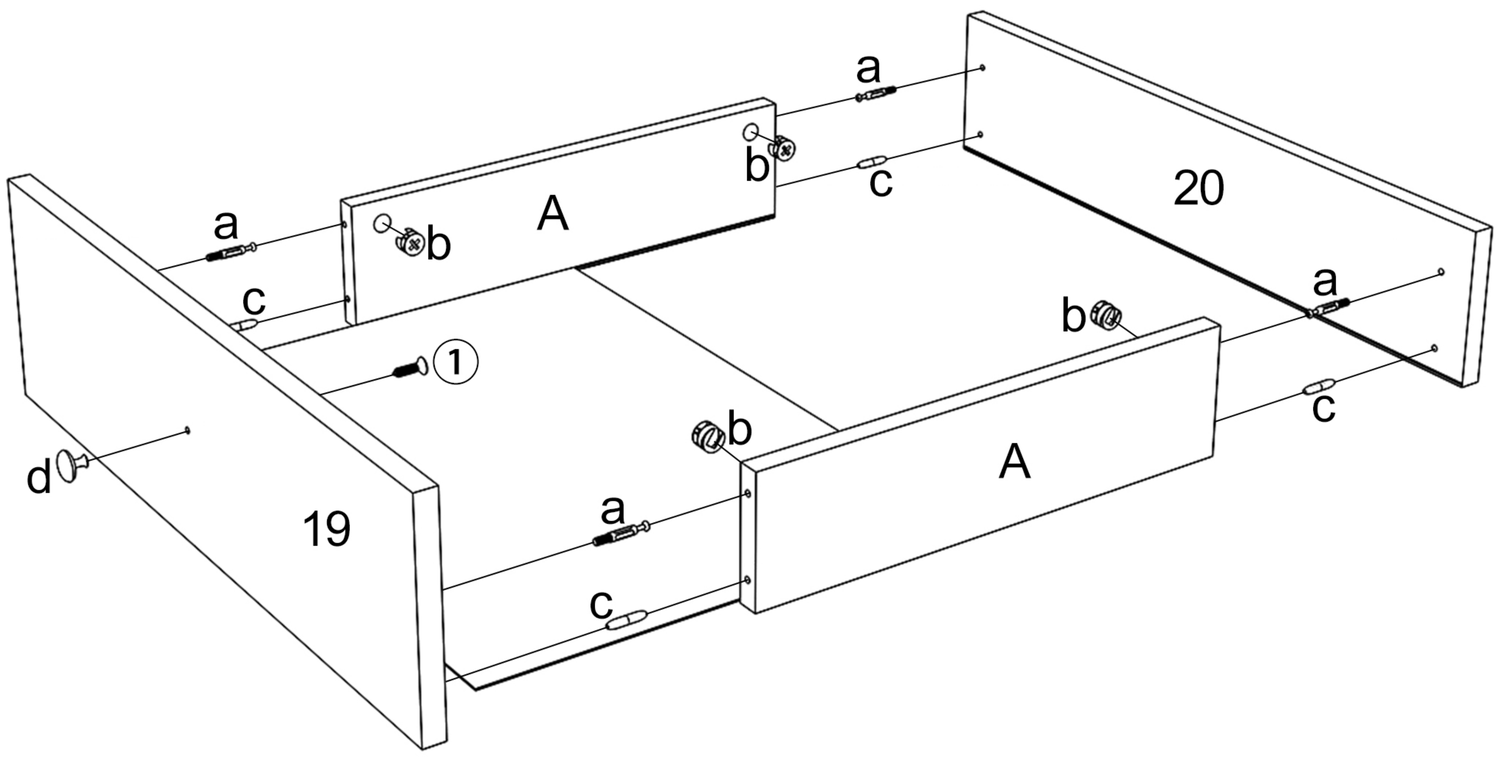
a
b
c
20
a
A
c
b
a
1
c
b
d
A
19
a
c

## 23

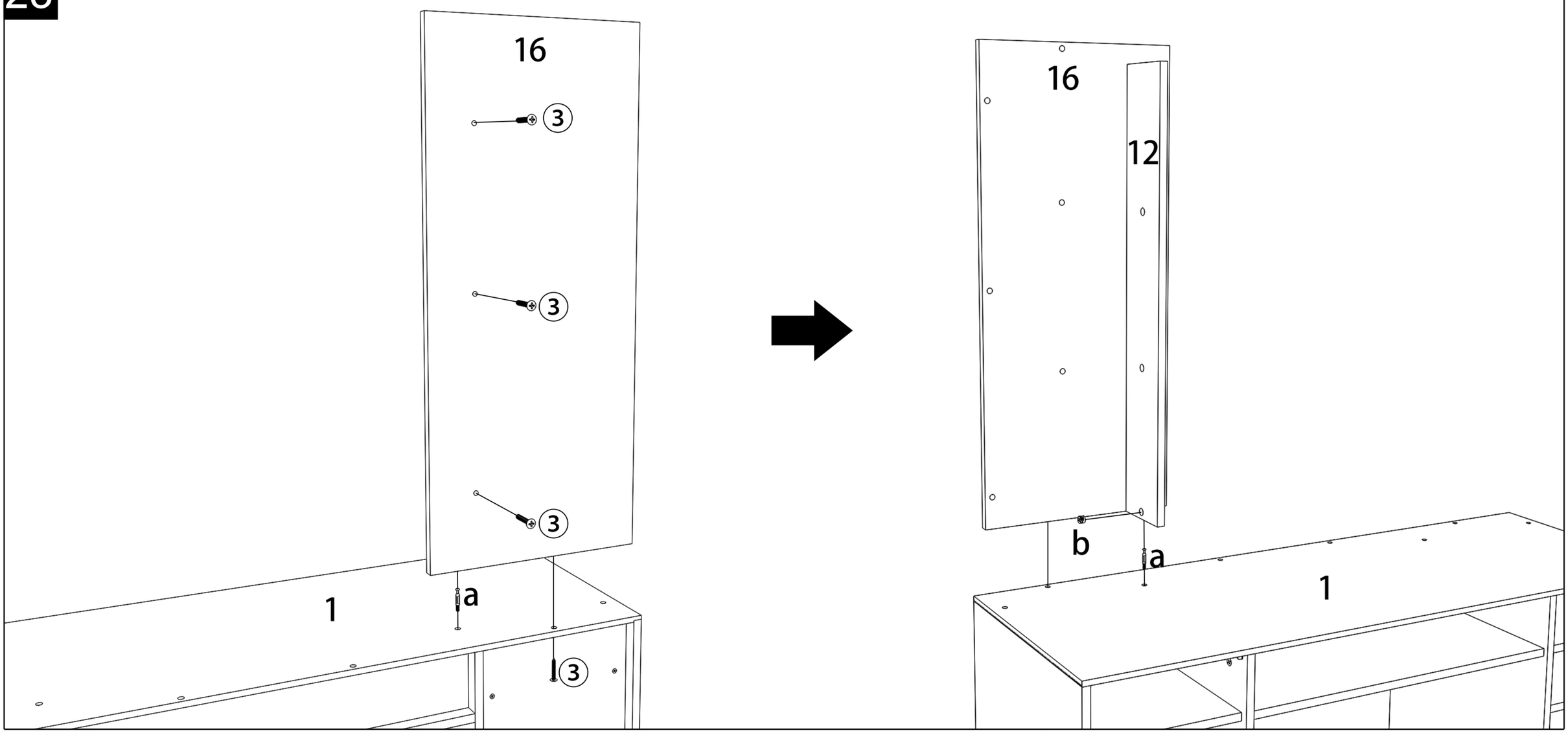
16
3
3
3
1
a
3
16
12
b
a
1

24

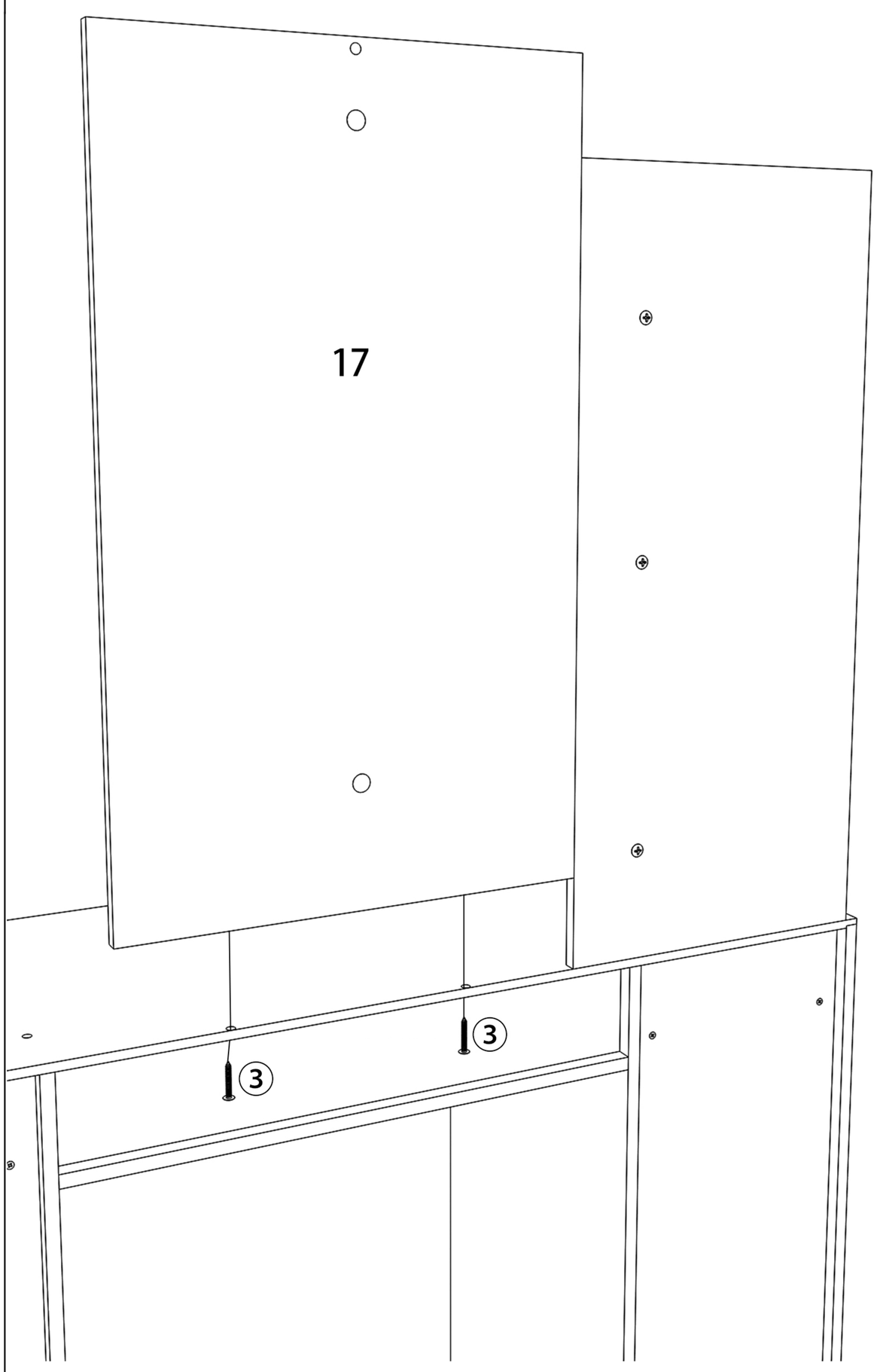


25

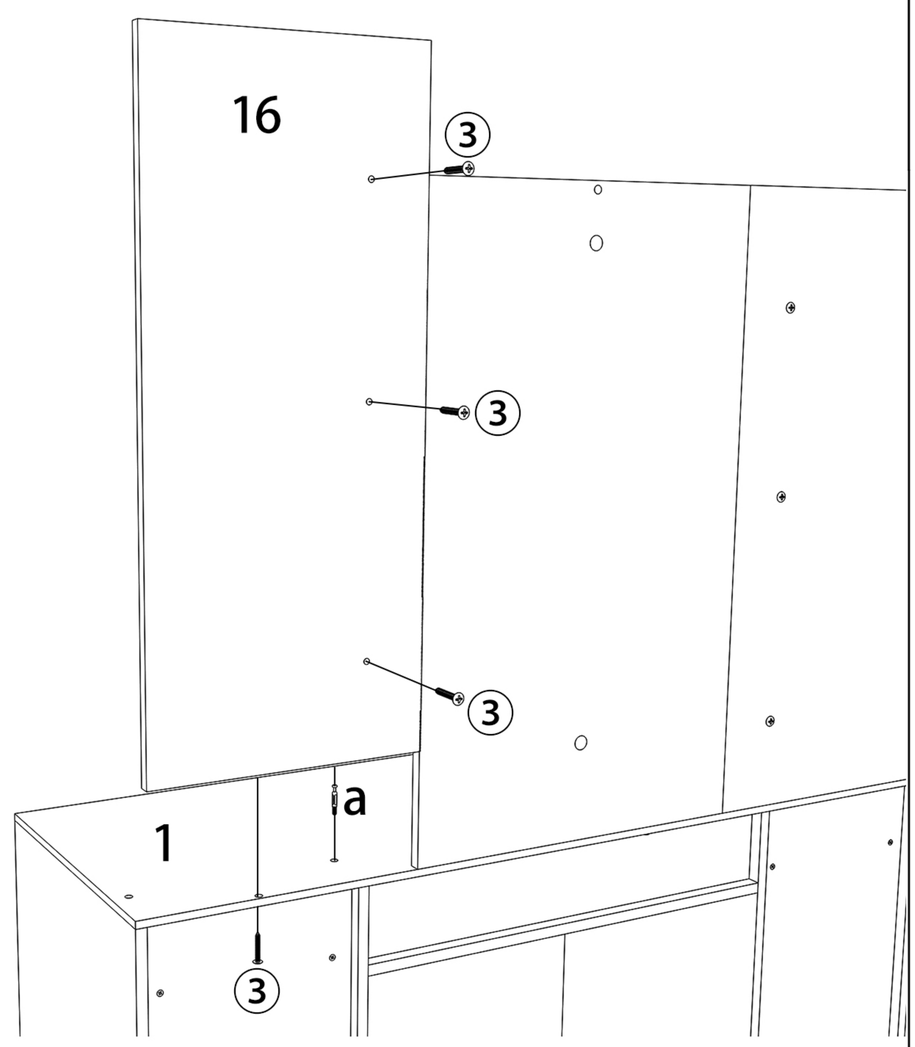


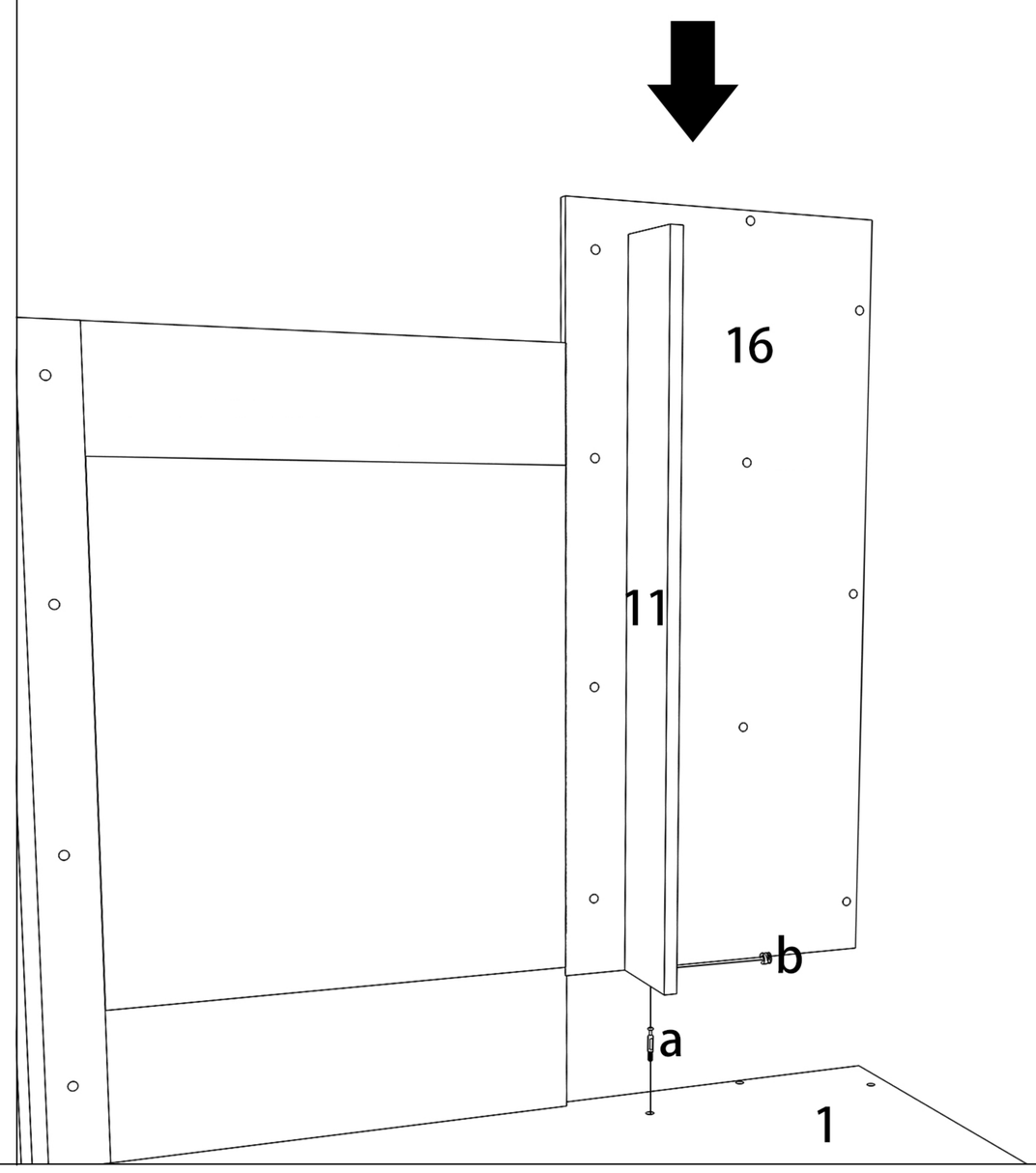


26

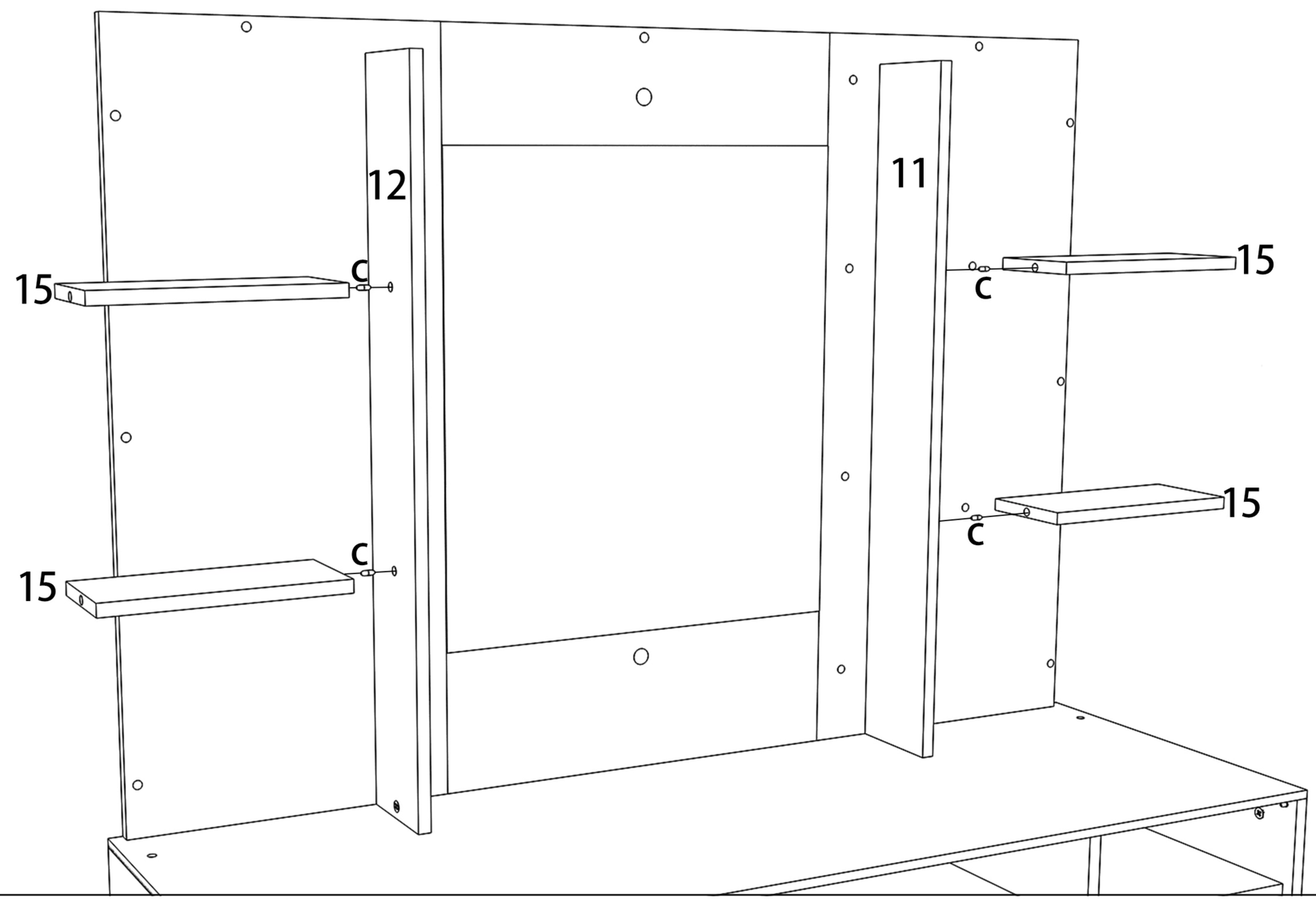

27

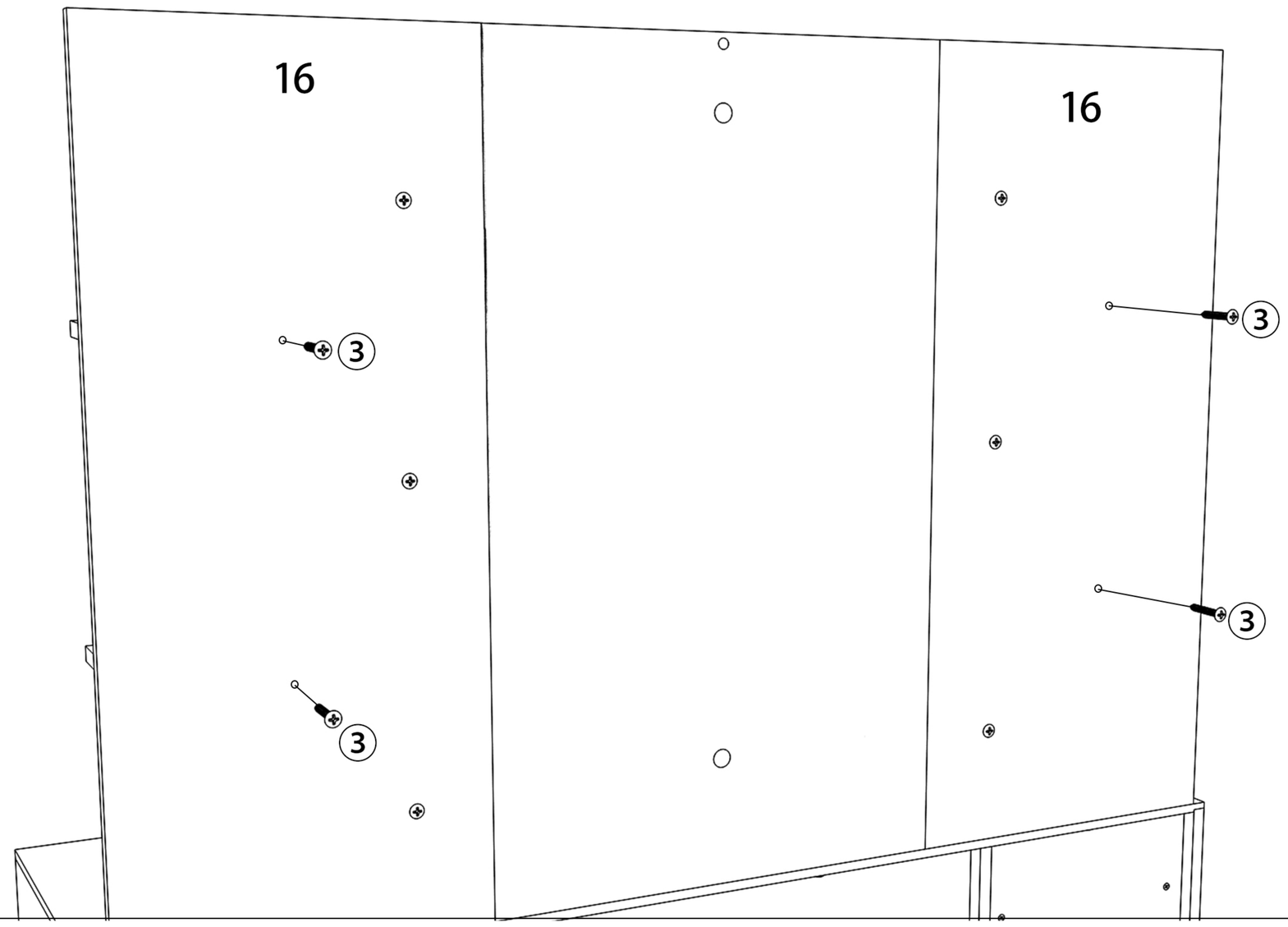


28

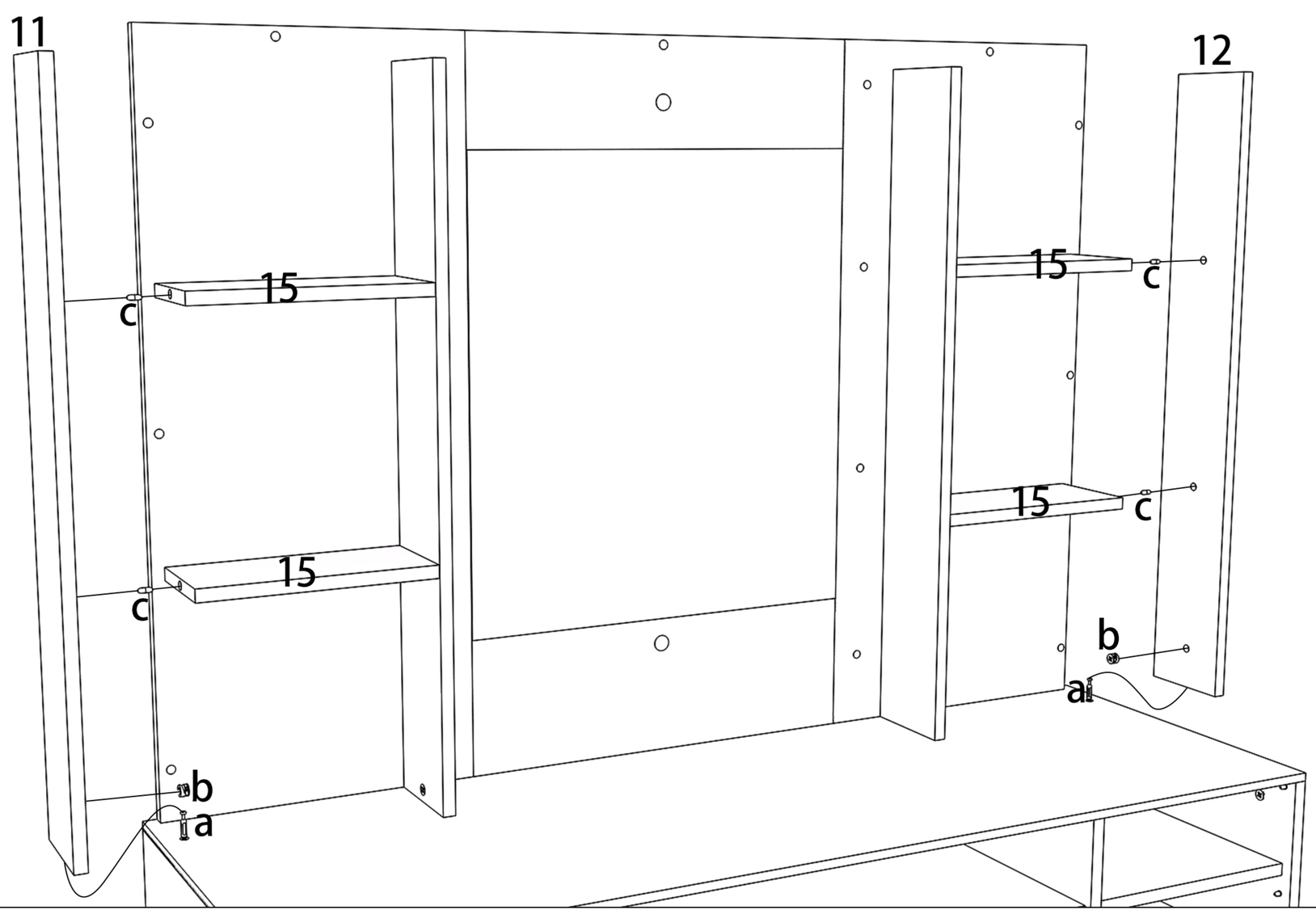


29

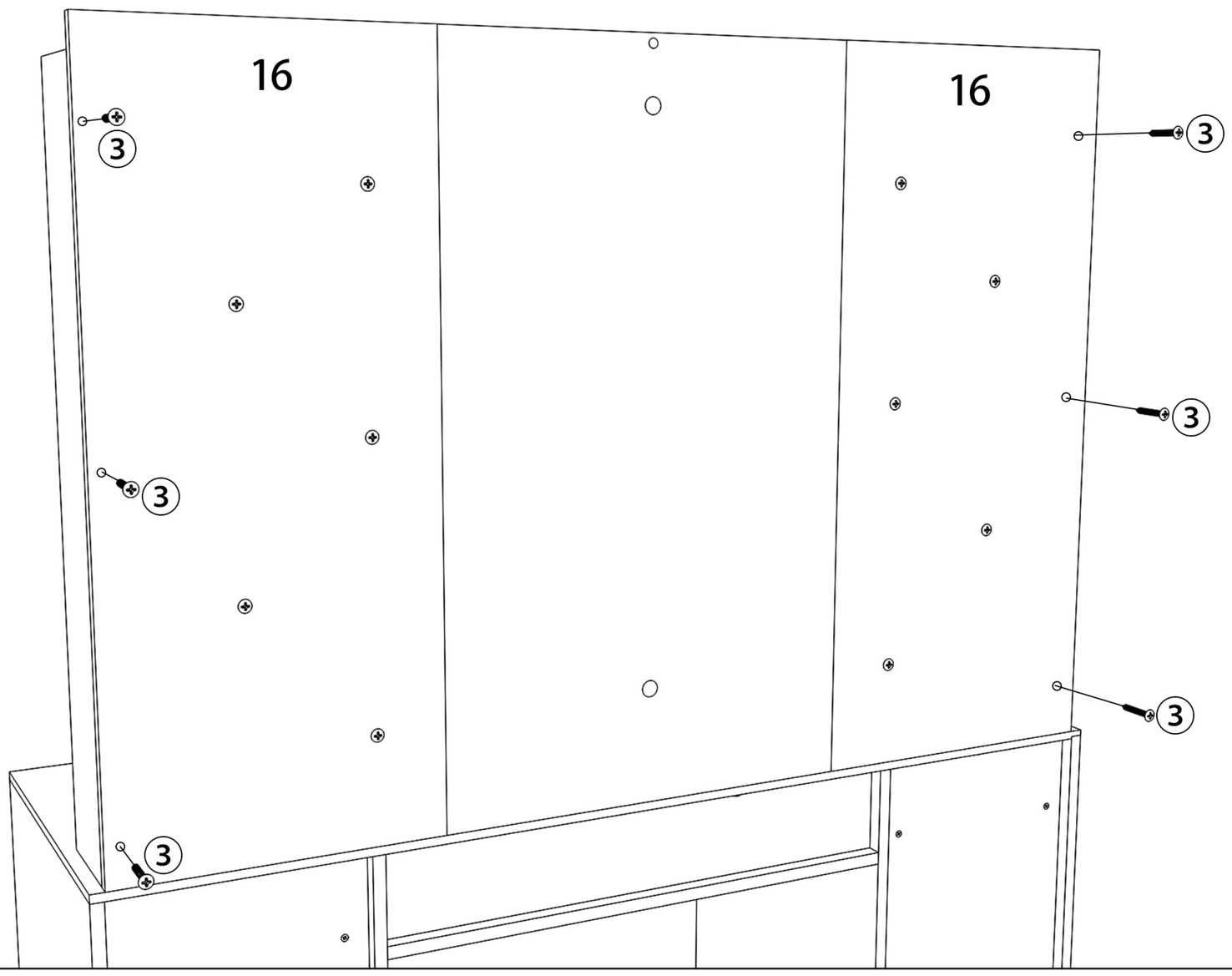

30

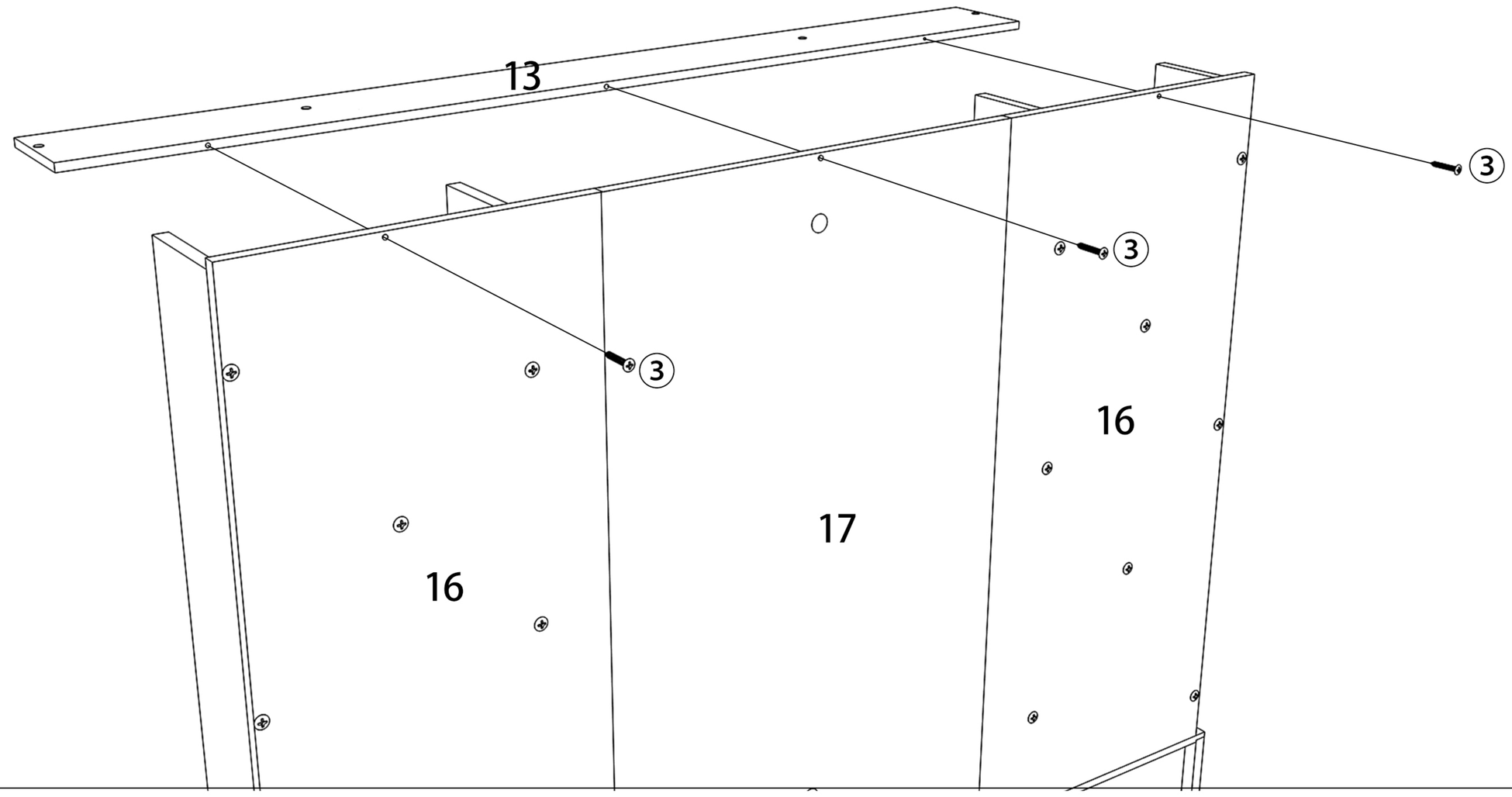


31

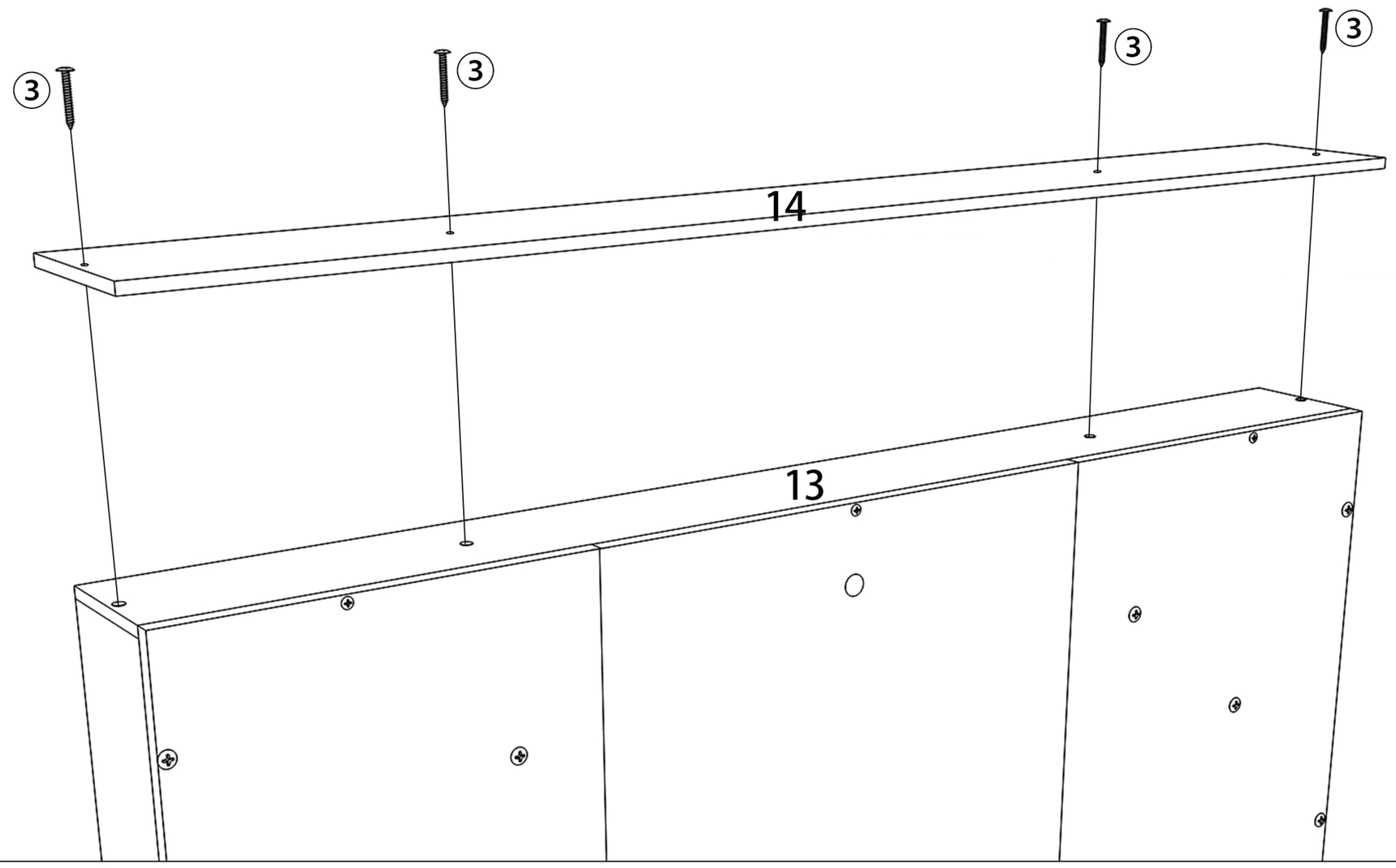

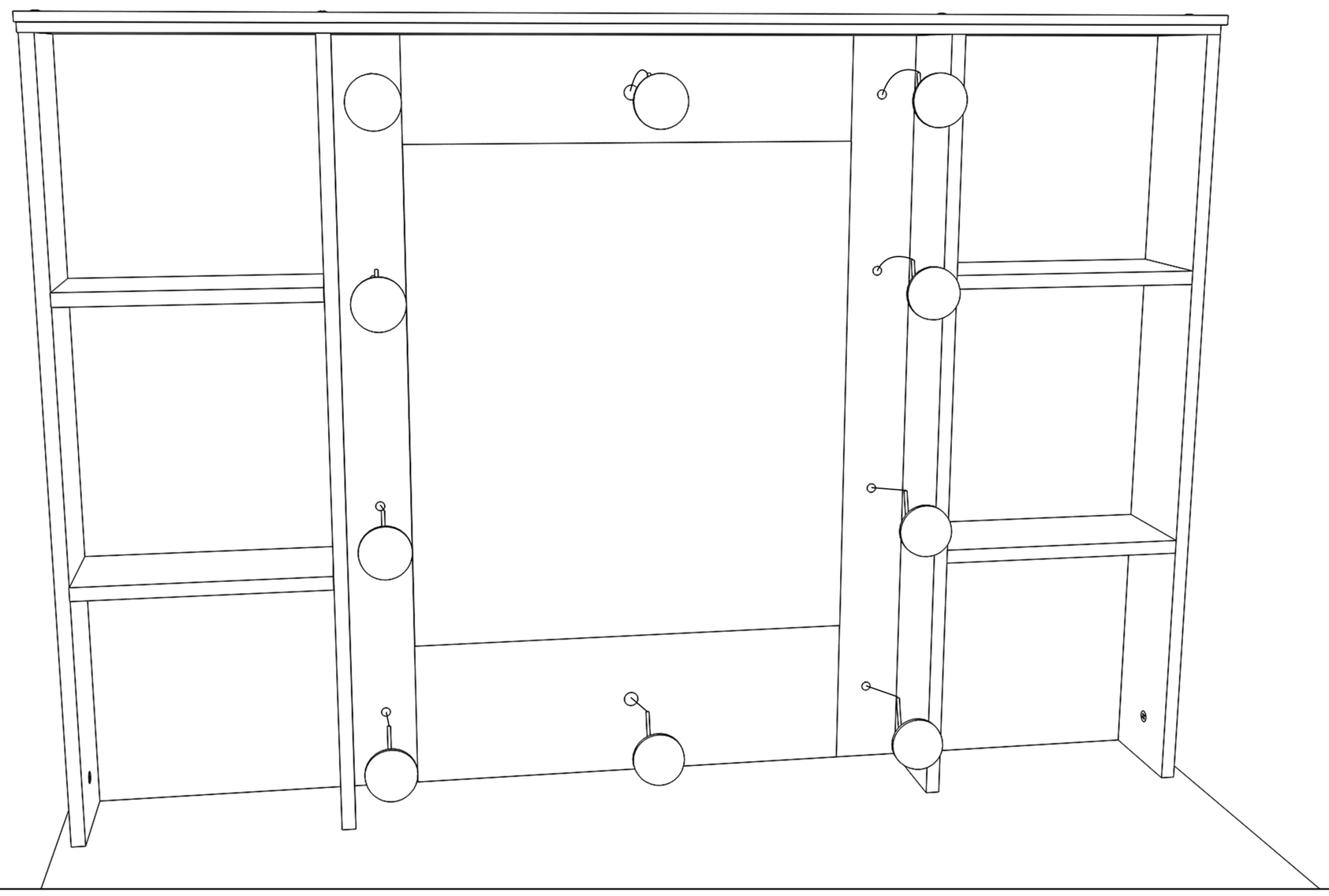
32