# Installation Manual

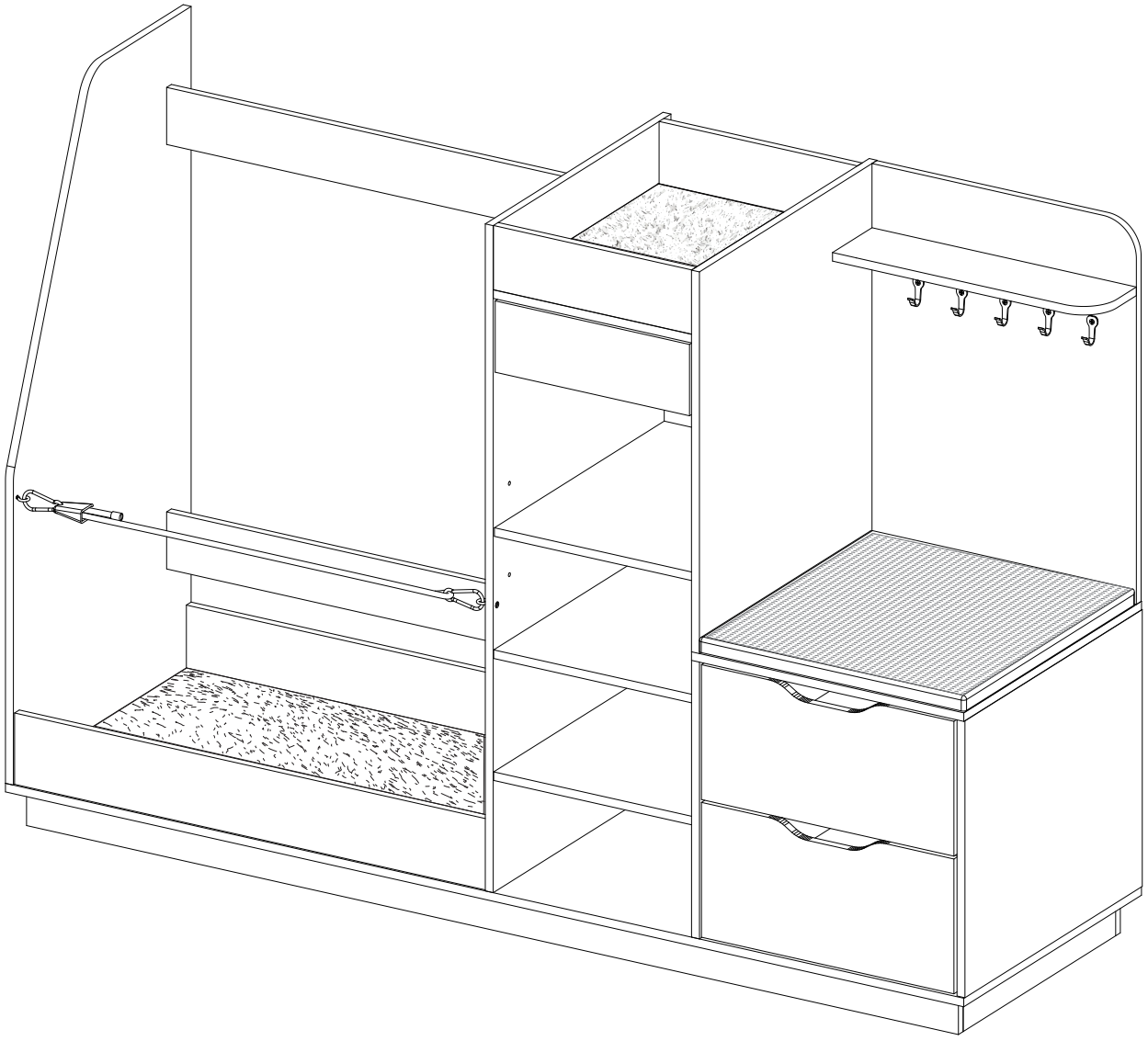

Made in China

**Hi! Dear buyer, Thank you for choosing our products. Please carefully follow the assembly instructions below to ensure proper assembly and to avoid any potential issues.**

**Recommendations Before Beginning Assembly:**
1. Read instructions, cover to cover
2. Check that you have all the necessary tools listed in the instruction manual.
3. Assemble on a clean non-marring surface.
4. Have at least 2-3 adults on hand for assembly.
5. Save all packaging until finished.
6. Keep small parts and tools away from children.

**Assembly Notice:**
- Lay out all the parts and hardware in an organized manner.
- Identify each part and match them with the corresponding labels in the manual.
- Assemble the product in the sequence specified to ensure stability.
- Do not overtighten screws during assembly as it may damage the parts or strip the threads.
- Double-check each step before proceeding to the next one.
- When you have completed assembly, we suggest you have more than one person to assist you with lifting and placing the product.

**** What should you do when you encounter problems?Don't Worry—We'll Take Care of Everything!**
If you encounter any difficulties (e.g., missing parts, damaged parts, unsuccessful assembly, etc.) during assembly, do not hesitate to contact the seller directly. The after-sales team will get back to you within 24 hours.

- If the product is damaged or missing any components, we are happy to provide replacement parts or a new product at no cost to you.
- To assist us in resolving your issue quickly, please contact our support team and provide clear photos of the damaged item or missing parts. This will help us identify the problem accurately and ensure a prompt solution. √√

**** Return Policy**
IMPORTANT NOTICE: Dear, If you encounter any issues with the product (quality-related or otherwise) that may require a refund or exchange, there is no need to initiate a return immediately. Please contact the seller directly, and in most cases, we can resolve the issue without requiring you to return the item. Thank you!

We hope these instructions help you successfully assemble the product. If you have any further questions or concerns, please feel free to contact the seller for assistance. Enjoy your new furniture!

**WARNUNG**

Bei unerwarter Montage oder Verwendung können schwere oder tödliche Verletzung auftreten.

1. Legen Sie in den Montageprozess alle Teile weg von Babys oder Kindern.

2.Stellen Sie sicher,dass der gebohrte Wandbereich frei von verborgenen Stromkabeln,Wasser-und Gasleitungen ist, wenn Sie dieses Produkt an der Wand befestigen.

3. Die Verwendung von kippsicherungen kann die Gefahr eines Kippens nur verringern,jedoch nicht beseitigen.

4. Setzen Sie bitte keine schweren Gegenstände auf dieses Produkt, es sei denn, dass das Produkt speziell fur die Unterbringung konzipiert wird.

5. Legen Sie bitte die schwersten Gegenstände auf das unterste Regal.

6. Erlauben Sie nie Kindern, auf Schubladen, Turen oder Regale zu klettern oder zu knallen.

# Parts List

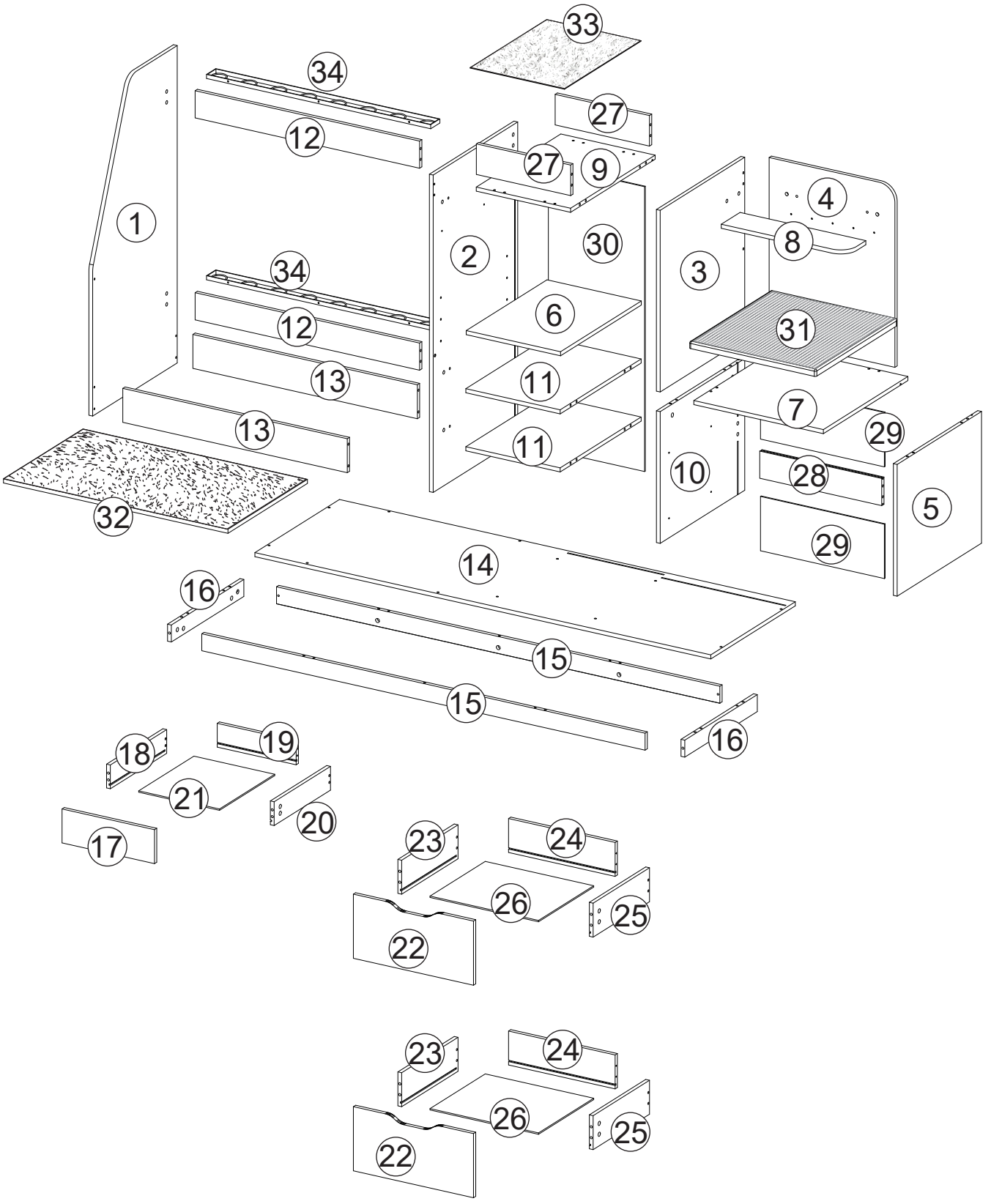

33
34
27
12
27
9
4
1
2
30
8
3
34
6
31
12
13
11
7
13
29
11
10
28
5
32
29
14
16
15
15
16
18
19
21
20
17
23
24
26
25
22
23
24
26
25
22

# Parts List

| | | |
|---|---|---|
| 1 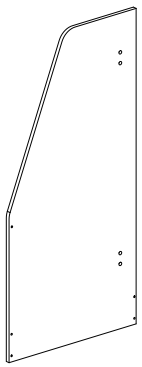 x1 | 2 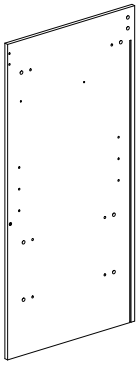 x1 | 3 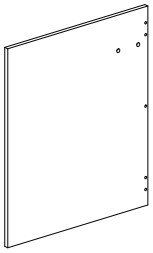 x1 |
| 4 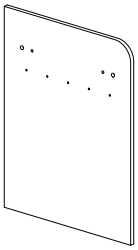 x1 | 5 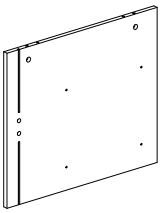 x1 | 6 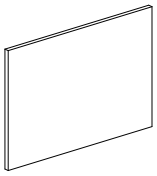 x1 |
| 7 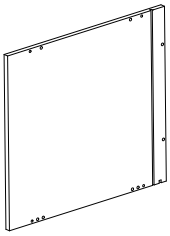 x1 | 8  x1 | 9 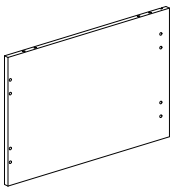 x1 |
| 10 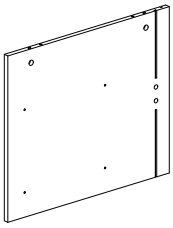 x1 | 11 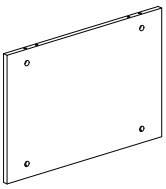 x2 | 12 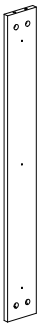 x2 |
| 13  x2 | 14 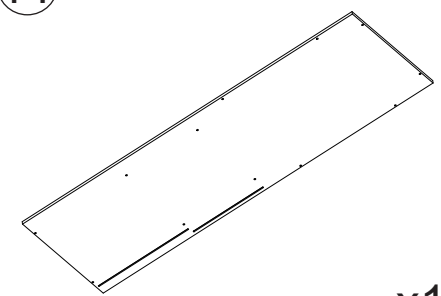 x1 | 15 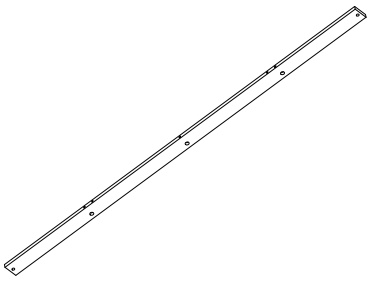 x2 |

# Parts List

| | | |
|---|---|---|
| 16  x2 | 17 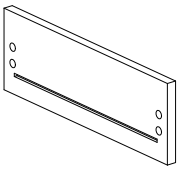 x1 | 18 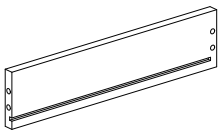 x1 |
| 19 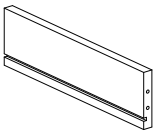 x1 | 20 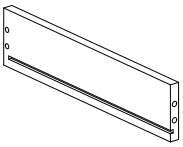 x1 | 21 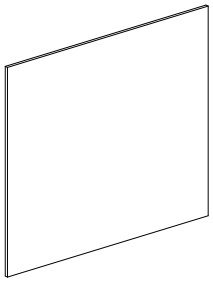 x1 |
| 22 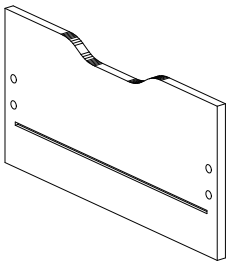 x2 | 23 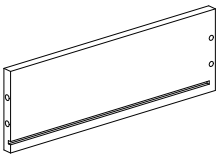 x2 | 24 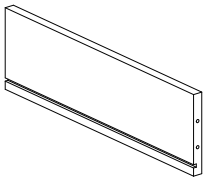 x2 |
| 25 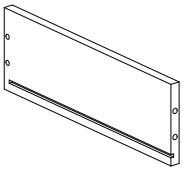 x2 | 26 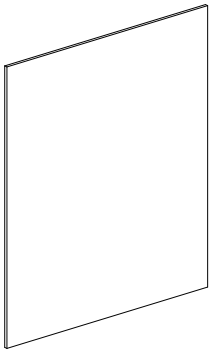 x2 | 27  x2 |
| 28 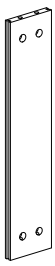 x1 | 29  x2 | 30 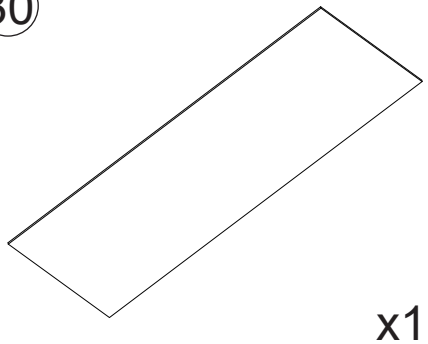 x1 |

# Parts List

| | | |
|---|---|---|
| 31 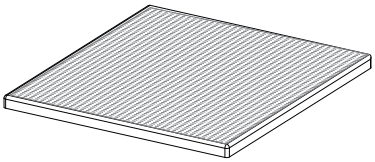 x1 | 32 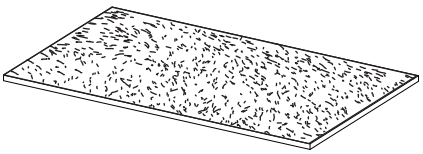 x1 | 33 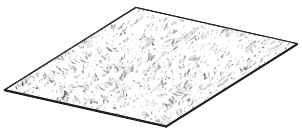 x1 |
| 34 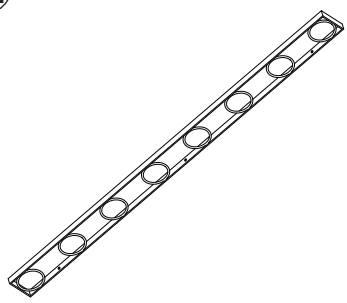 x2 | | |
| | | |
| | | |
| | | |

# Hardware List

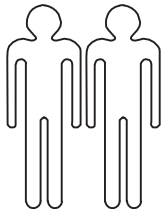
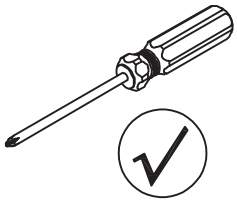
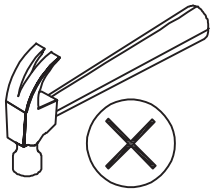
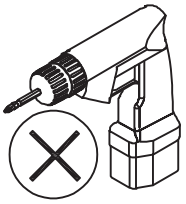

| | | | | |
|---|---|---|---|---|
| A<br> 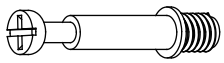 <br>Ø6x40 54PCS | B<br> 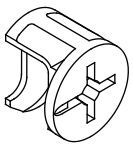 <br>Ø12x10 74PCS | C<br> 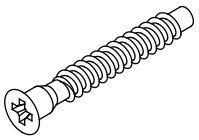 <br>M5x40 35PCS | D<br> 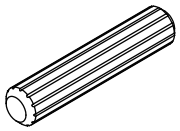 <br>Ø6x40 36PCS | E<br> 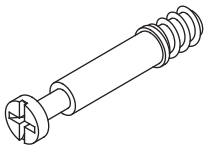 <br>Ø6x40 20PCS |
| F<br> 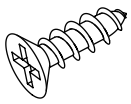 <br>M3.5x12 38PCS | G<br> 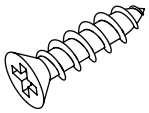 <br>M3.5x14 14PCS | H<br> 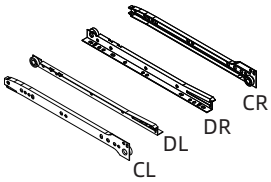 <br><br>300x30 3PCS | I<br> 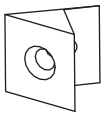 <br>14PCS | J<br>  <br>4PCS |
| K<br>  <br>2PCS | L<br> 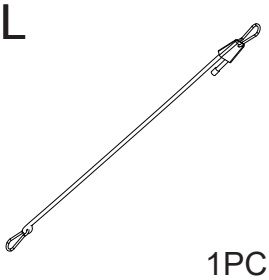 <br>1PC | M<br>  <br>8PCS | N<br> 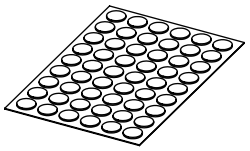 <br>Ø21 1PC | |
| | | | | |
| | | | | |

# CAM BOLT INSTALLATION AS BELOW:

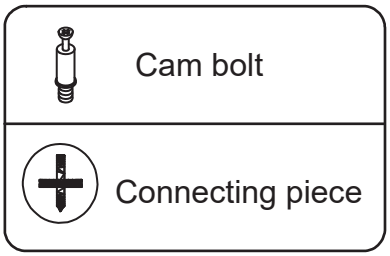





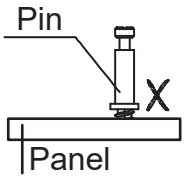


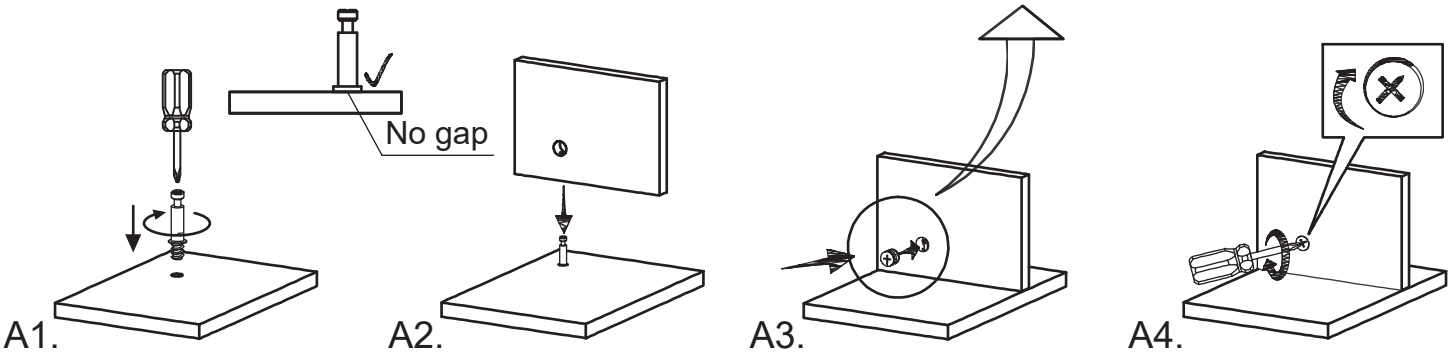


EN

After opening the packaging, please lay the foam in the packaging flat on the ground to place the boards, to prevent them from being damaged by collision.

DE

Nachdem Sie die Verpackung geöffnet haben, legen Sie bitte den Schaumstoff auf den Boden, um die Platten vor Beschädigungen zu schützen.

# Assembly

## 1

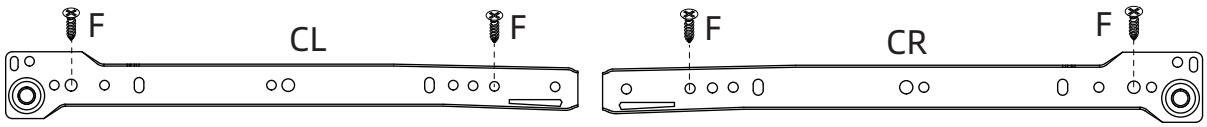


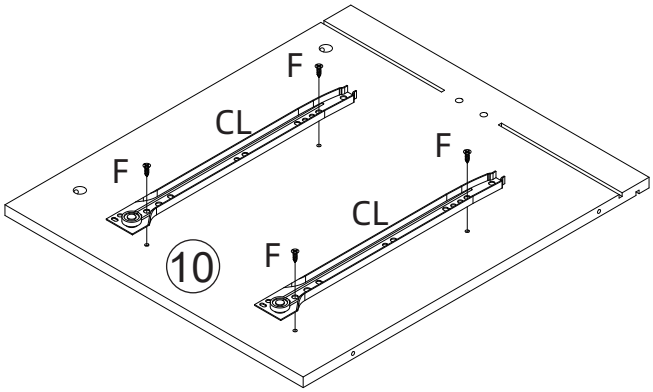


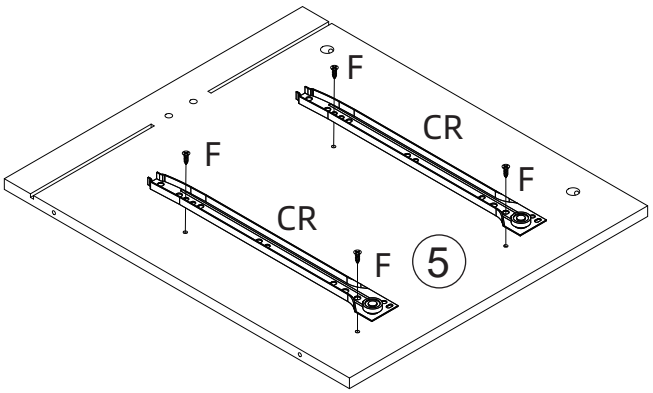


| | | |
|---|---|---|
| H | 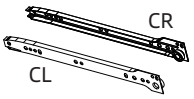  | x2 |
| F |  | x8 |

## 2

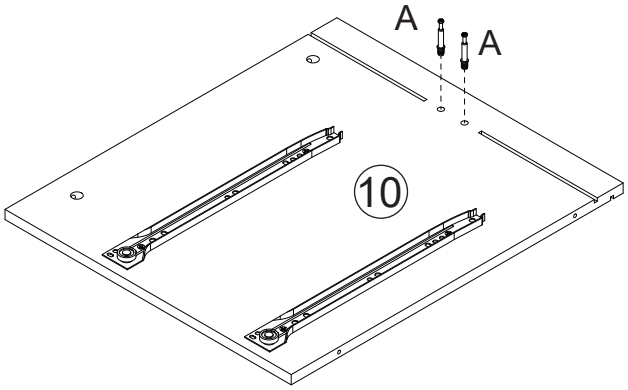


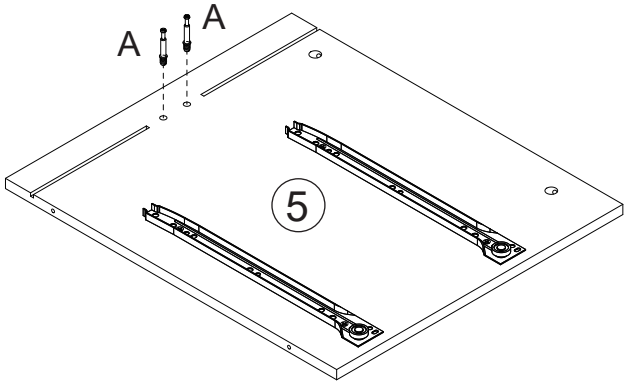


| | | |
|---|---|---|
| A | 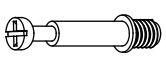 | x4 |

# Assembly

## 3

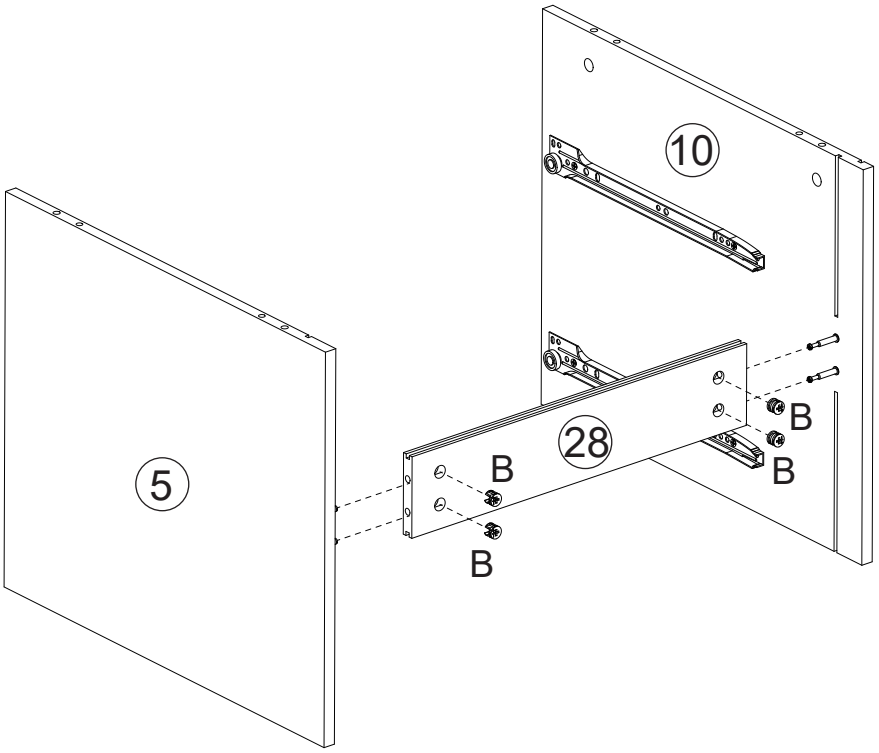


B  x4

## 4

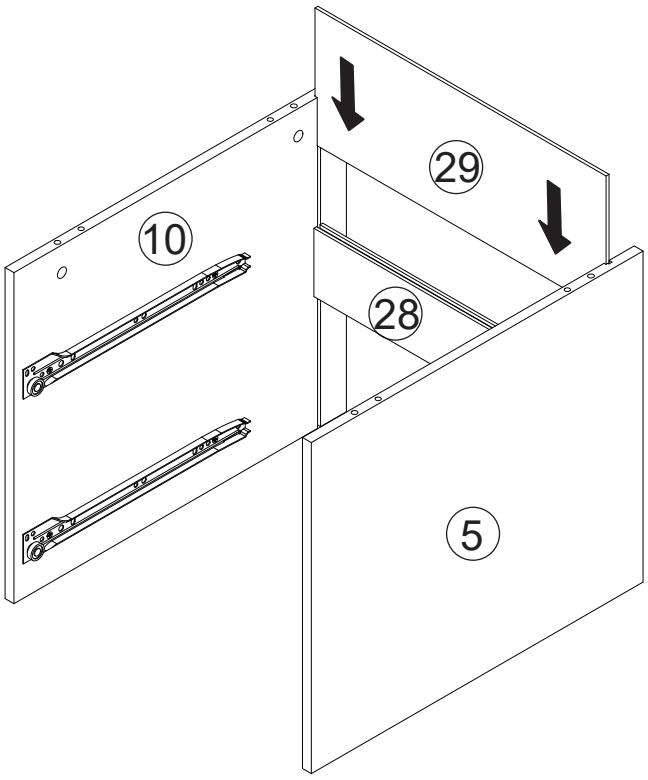

# Assembly

## 5

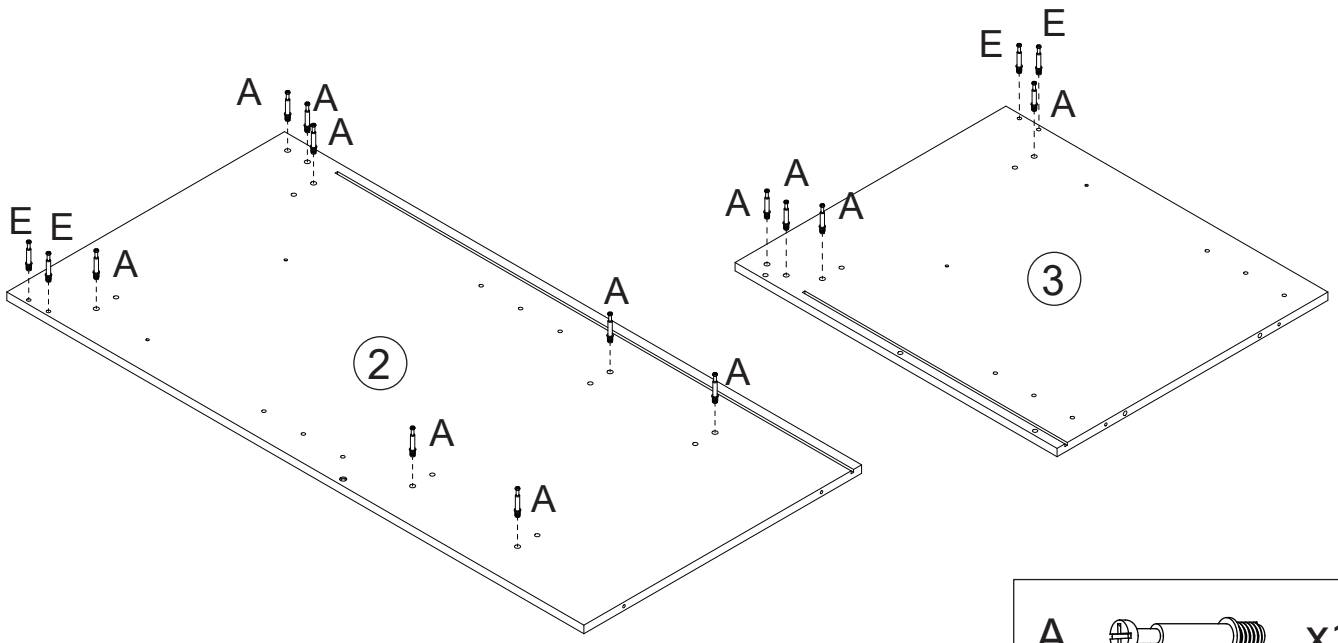


| | | |
|---|---|---|
| A |  | x12 |
| E | 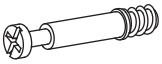 | x4 |

## 6

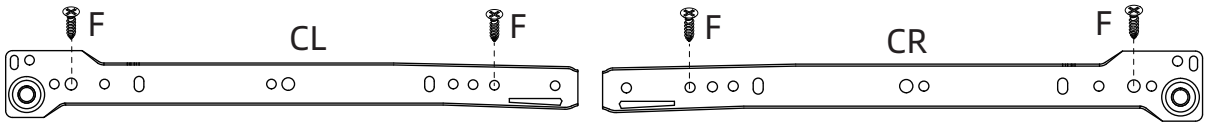


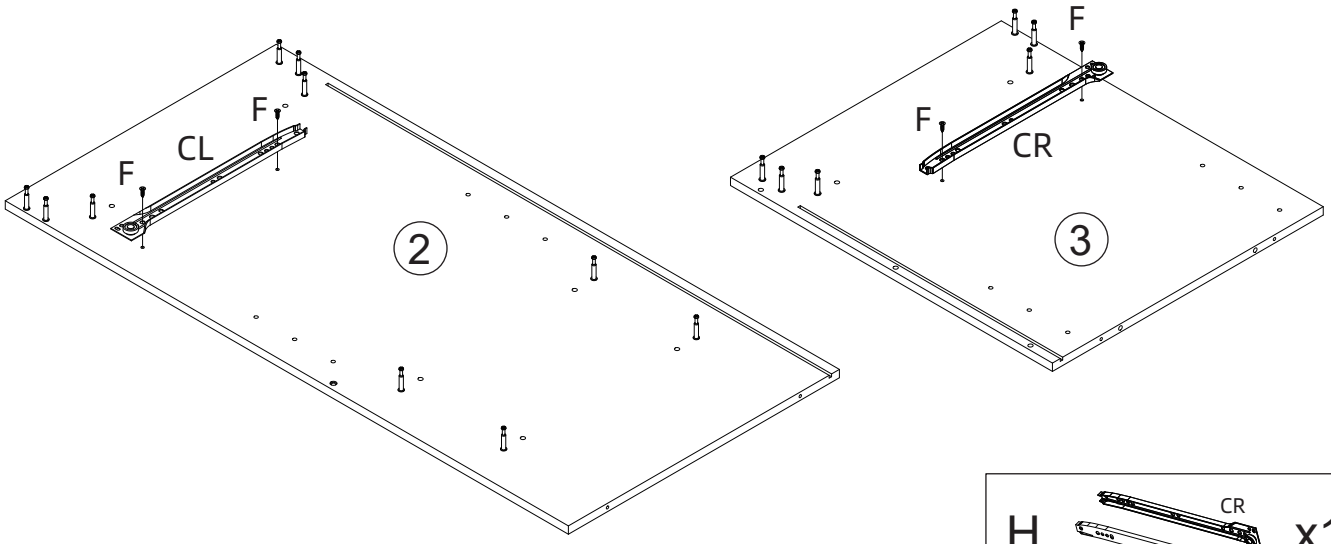


| | | |
|---|---|---|
| H |   | x1 |
| F |  | x4 |

# Assembly

## 7

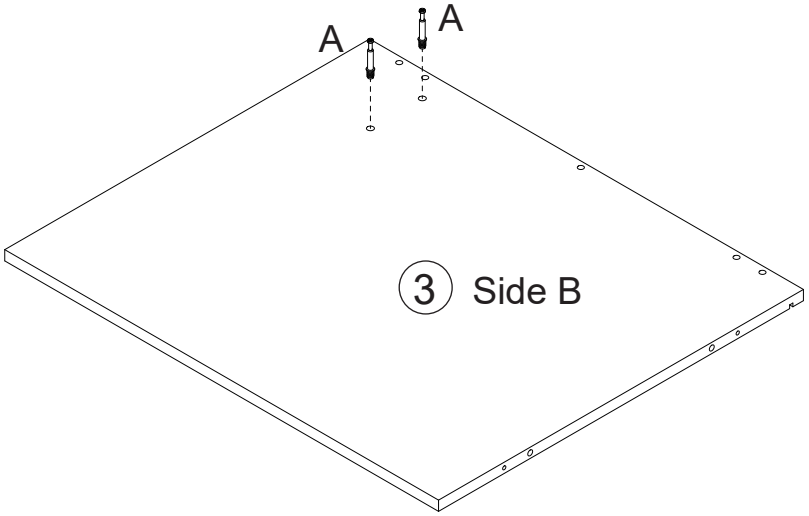


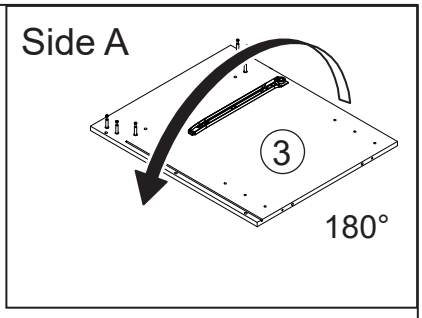


A 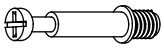 x2

## 8

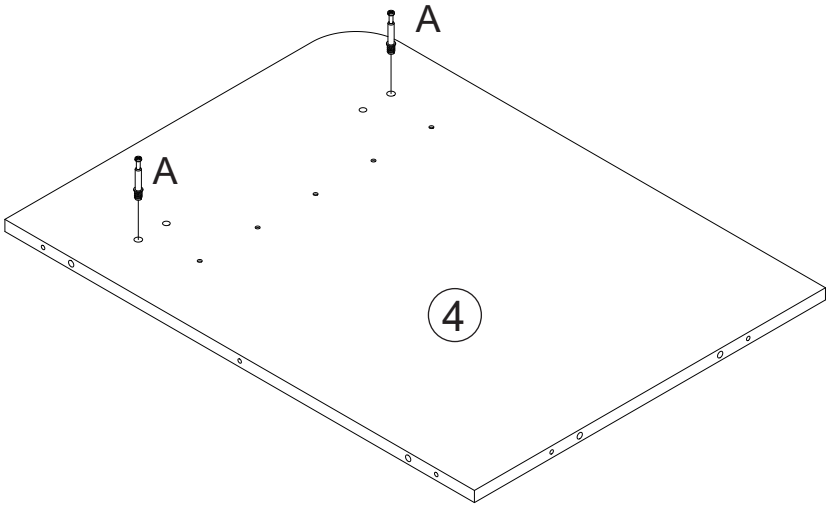


A 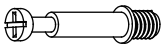 x2

# Assembly

## 9

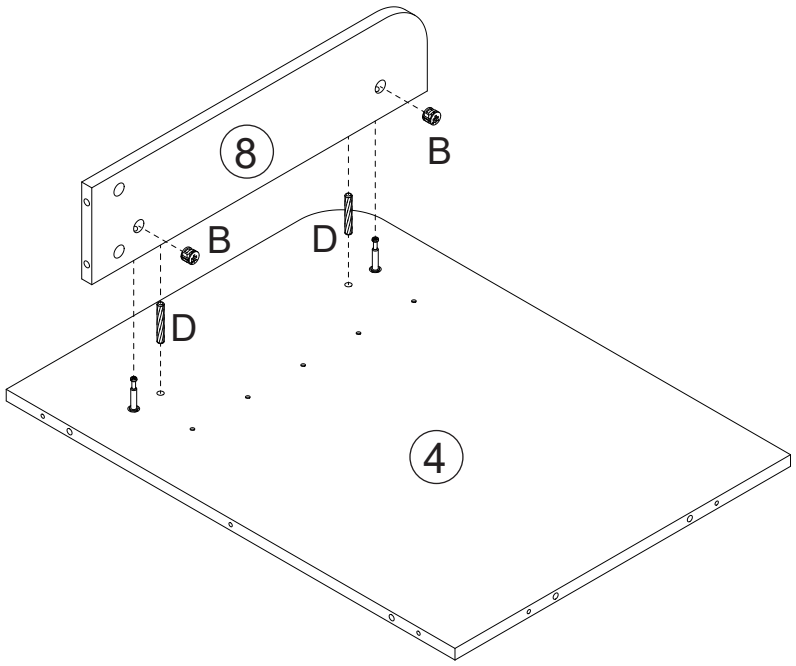


| | | |
|---|---|---|
| B |  | x2 |
| D |  | x2 |

## 10

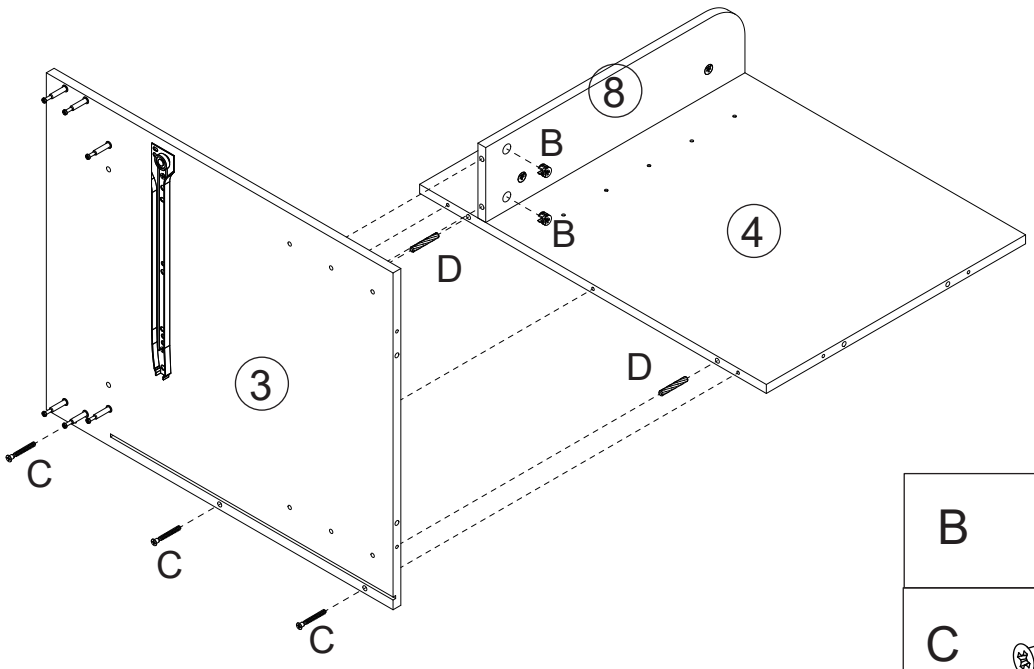


| | | |
|---|---|---|
| B |  | x2 |
| C | 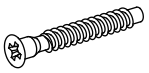 | x3 |
| D |  | x2 |

# Assembly

## 11

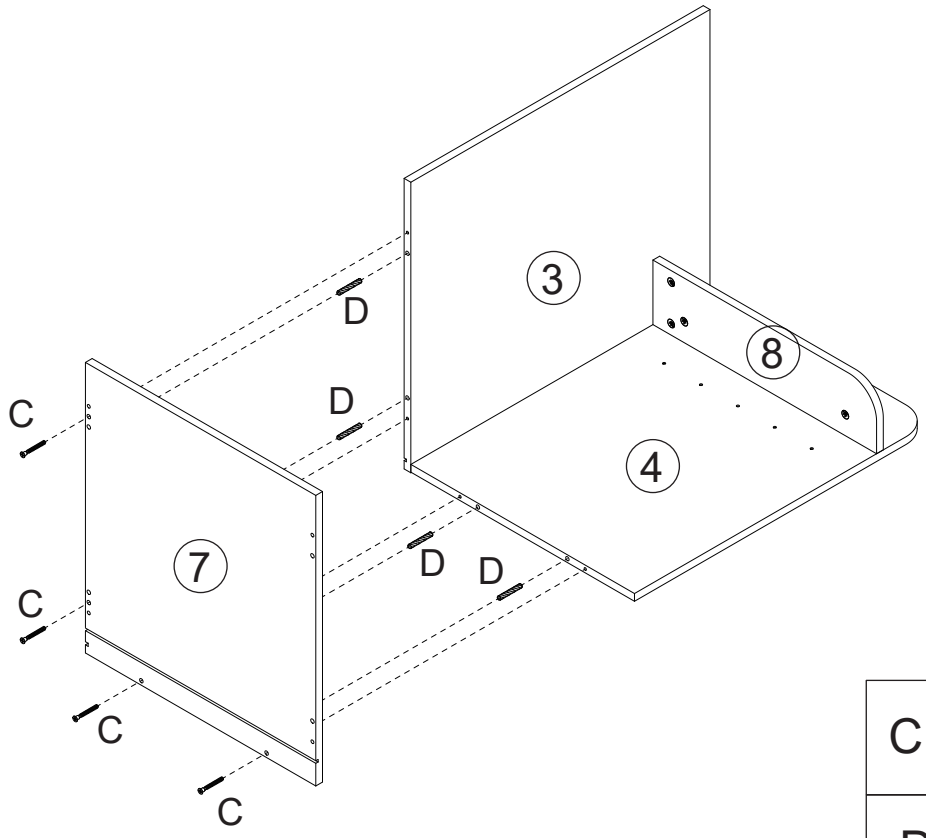


| | | |
|---|---|---|
| C | 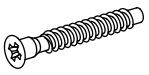 | x4 |
| D |  | x4 |

## 12

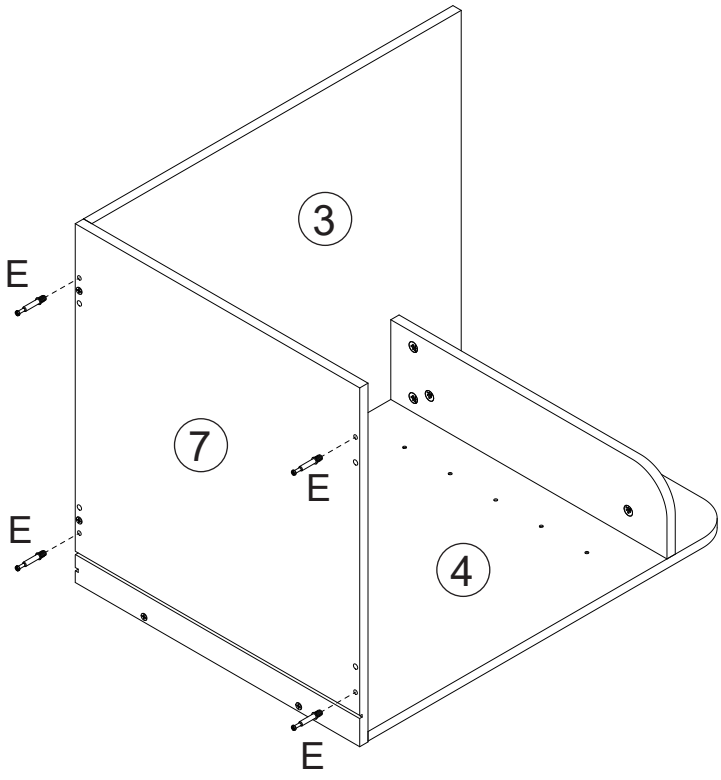


| | | |
|---|---|---|
| E | 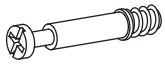 | x4 |

# Assembly

## 13

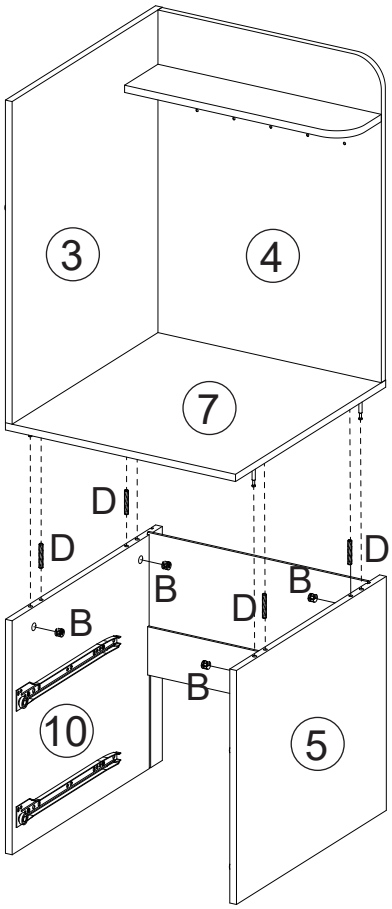


| | | |
|---|---|---|
| B |  | x4 |
| D |  | x4 |

## 14

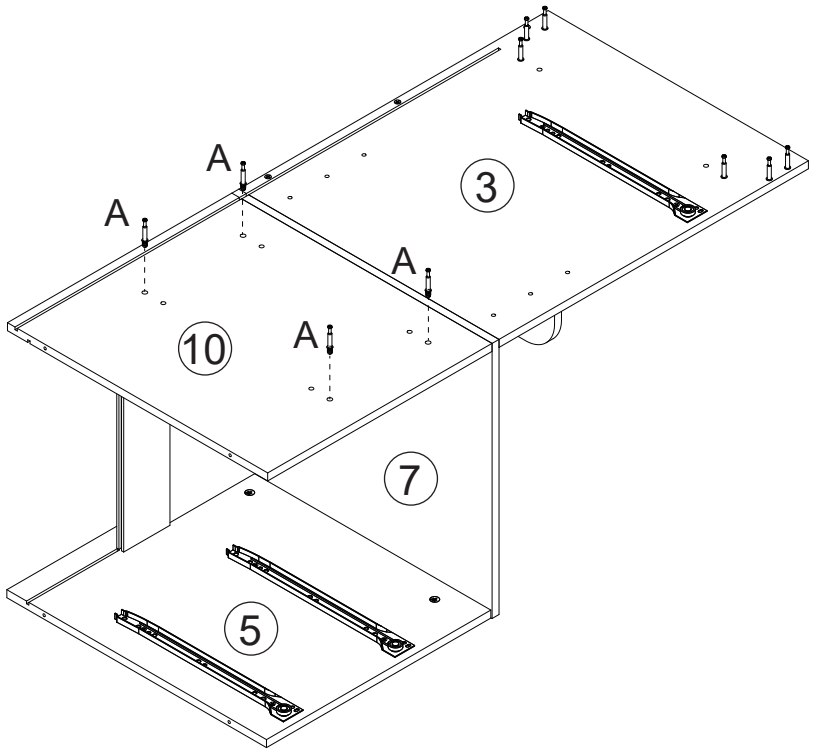


| | | |
|---|---|---|
| A | 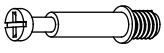 | x4 |

# Assembly

## 15

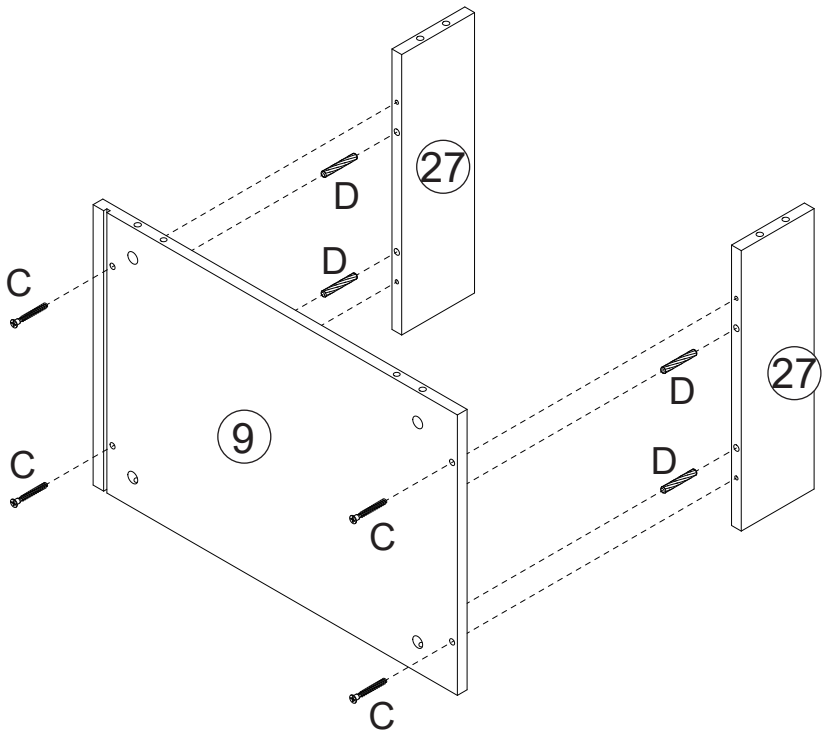


| | | |
|---|---|---|
| C | 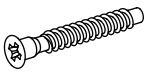 | x4 |
| D |  | x4 |

## 16

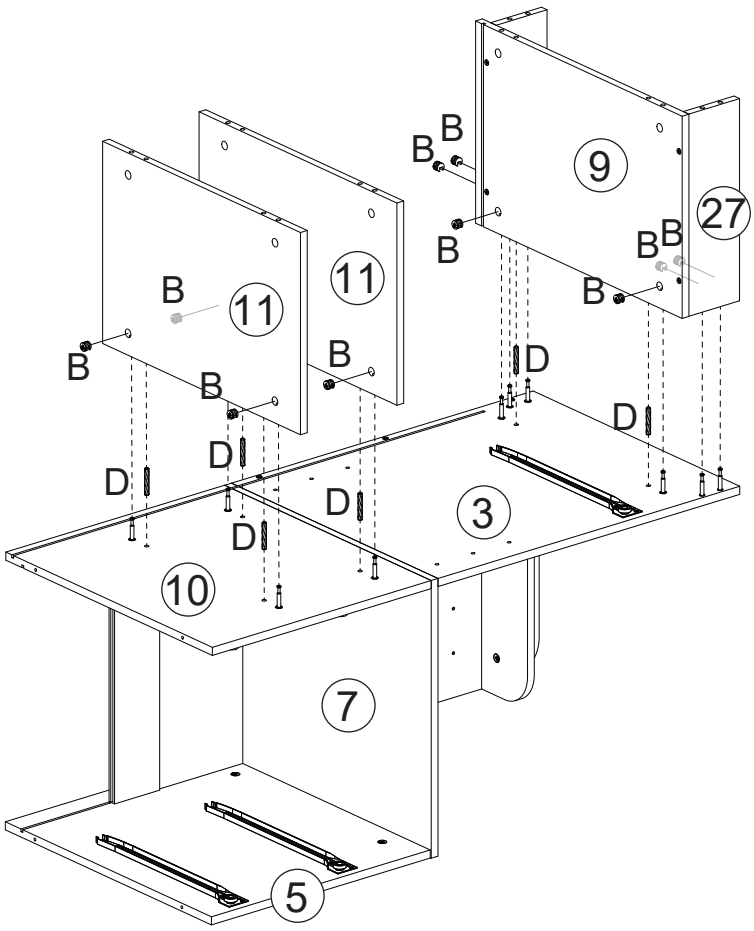


| | | |
|---|---|---|
| B |  | x10 |
| D |  | x6 |

# Assembly

## 17

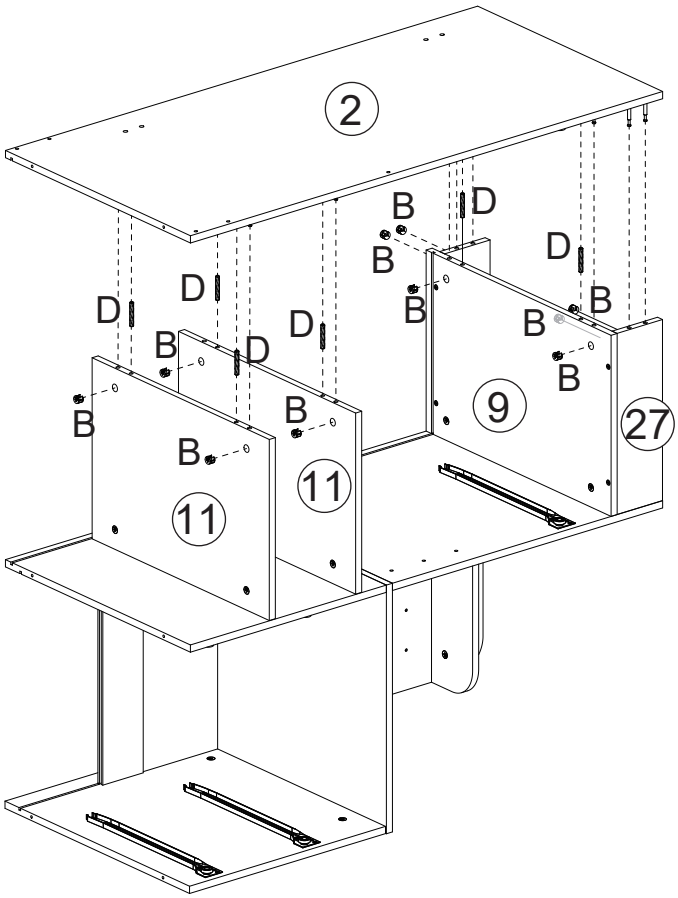


| | | |
|---|---|---|
| B |  | x10 |
| D |  | x6 |

## 18

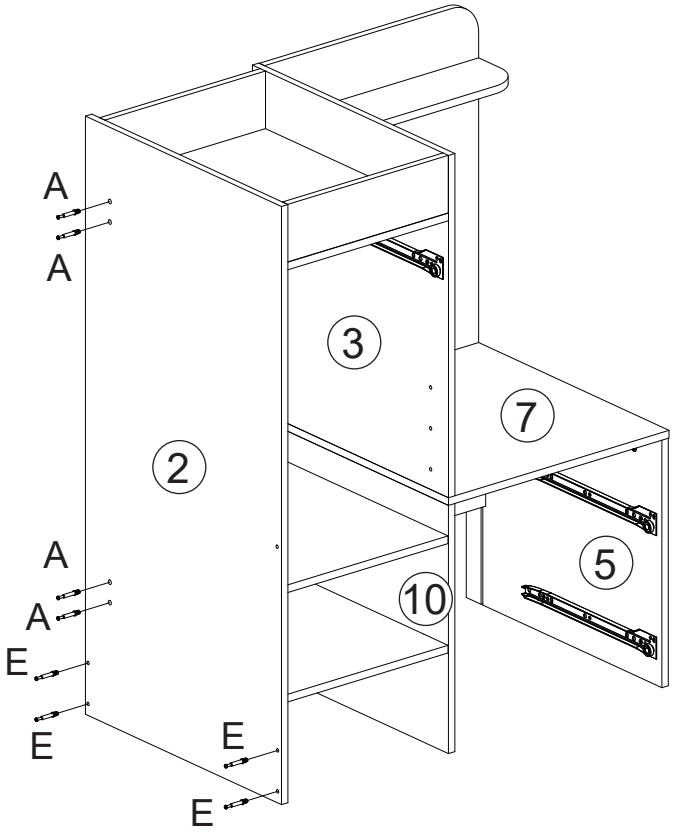


| | | |
|---|---|---|
| A | 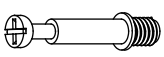 | x4 |
| E | 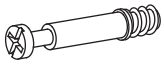 | x4 |

# Assembly

## 19

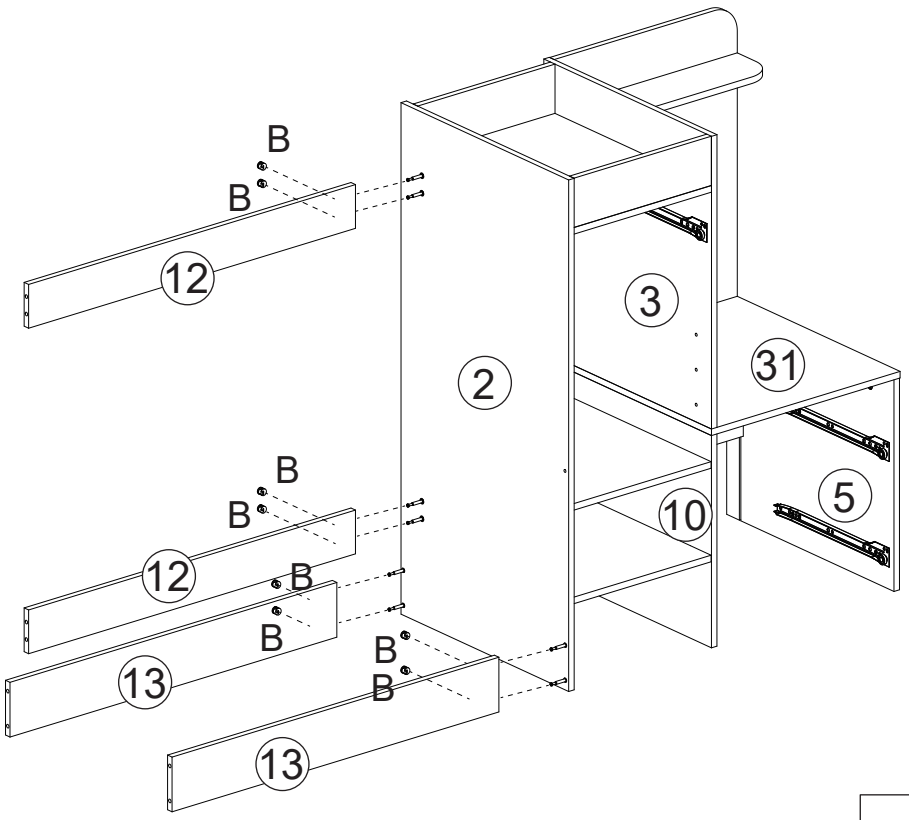


| | | |
|---|---|---|
| B |  | x8 |

## 20

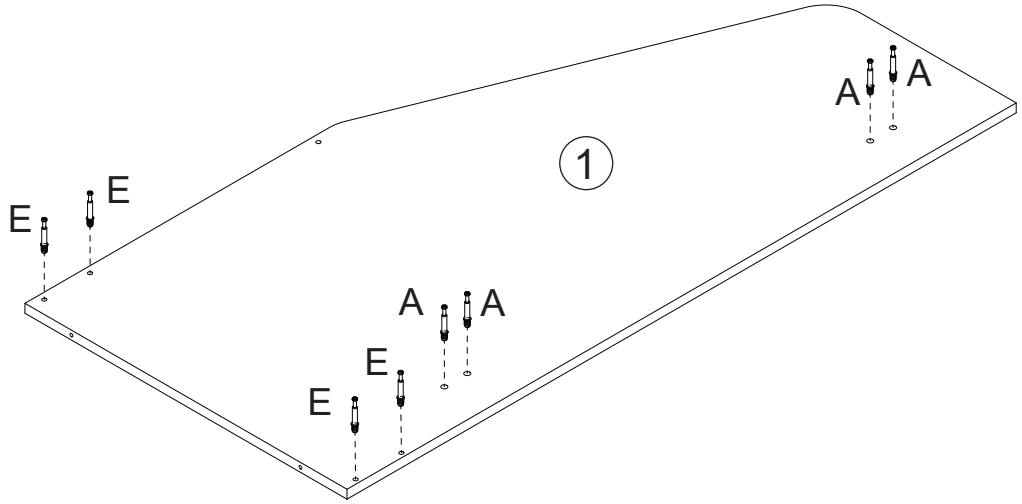


| | | |
|---|---|---|
| A | 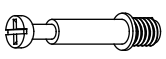 | x4 |
| E | 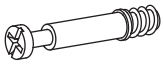 | x4 |

# Assembly

## 21

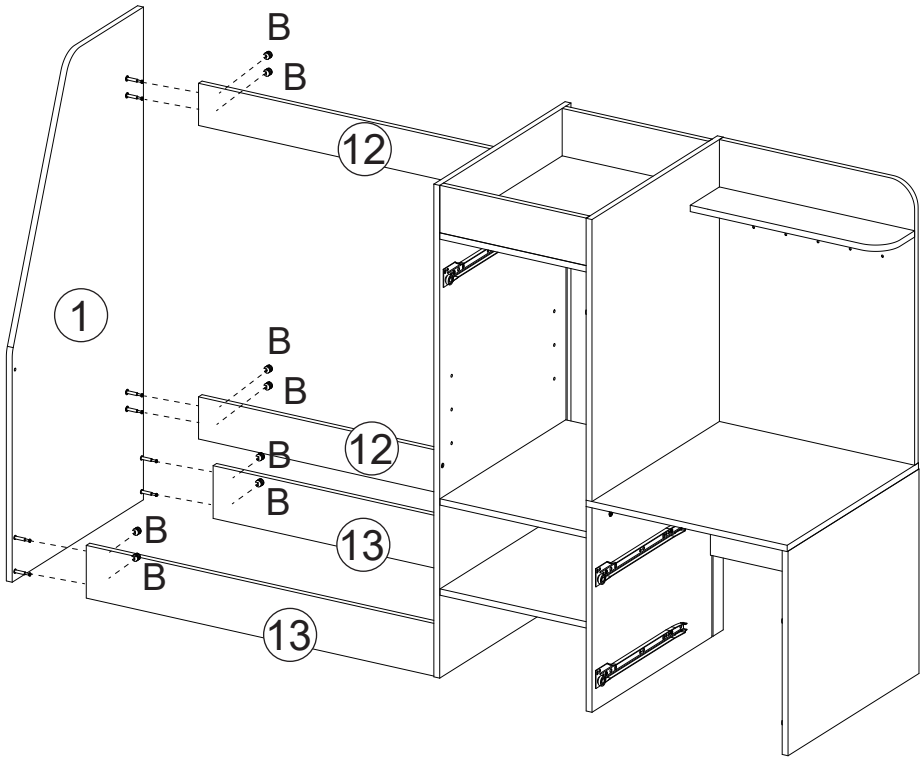


| | | |
|---|---|---|
| B |  | x8 |

## 22

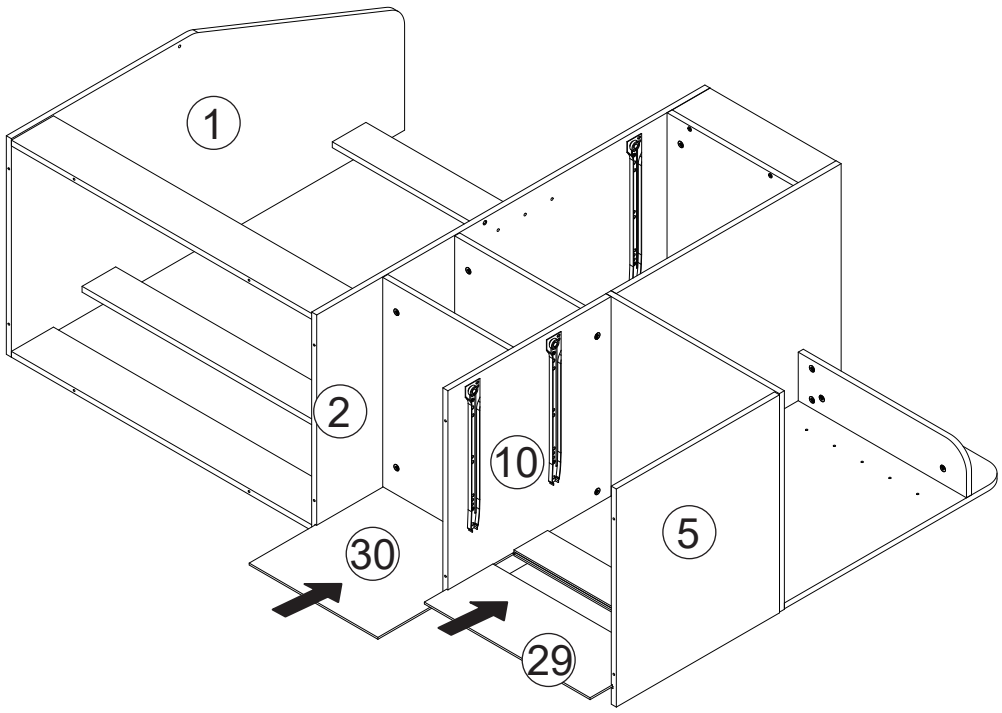

# Assembly

## 23

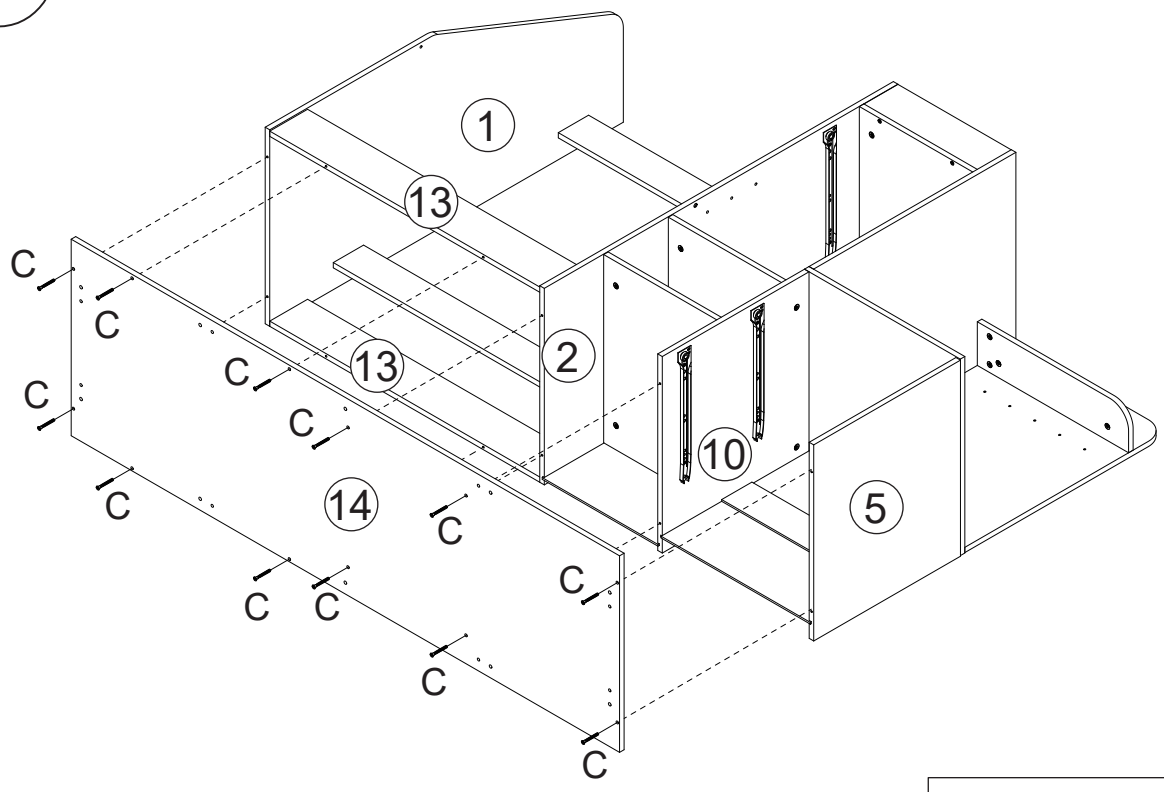


C 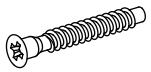 x12

## 24

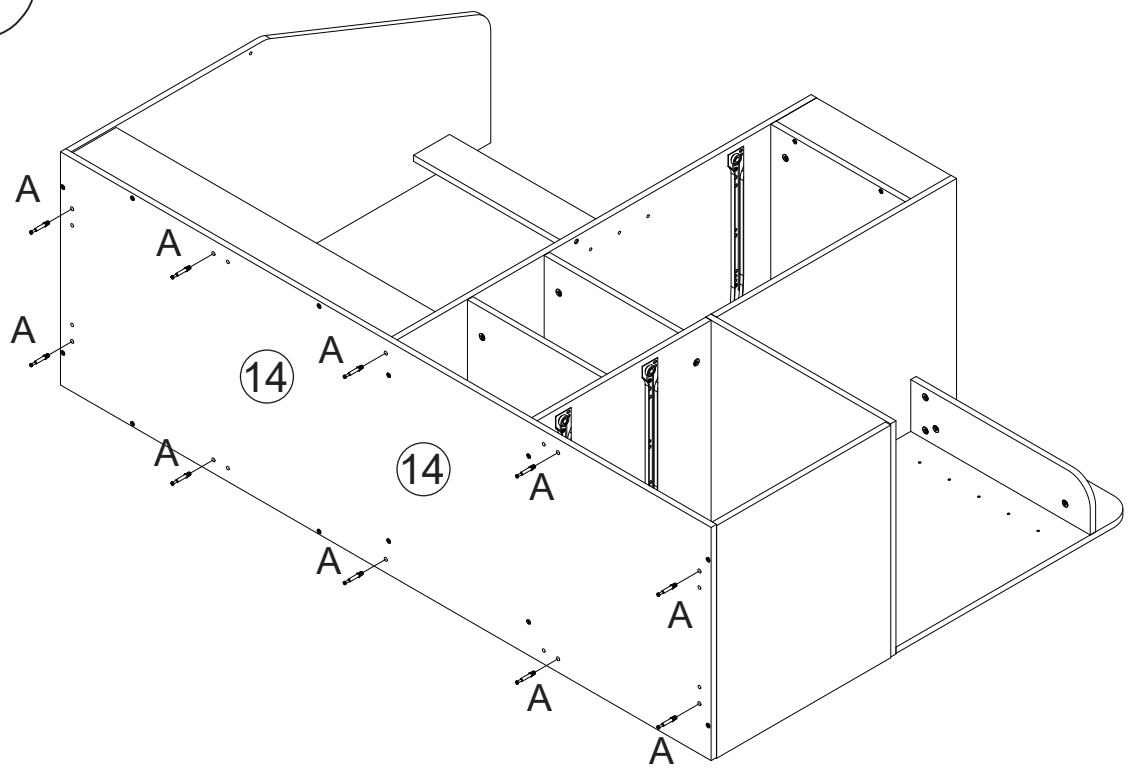


A 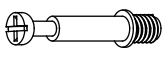 x10

# Assembly

## 25

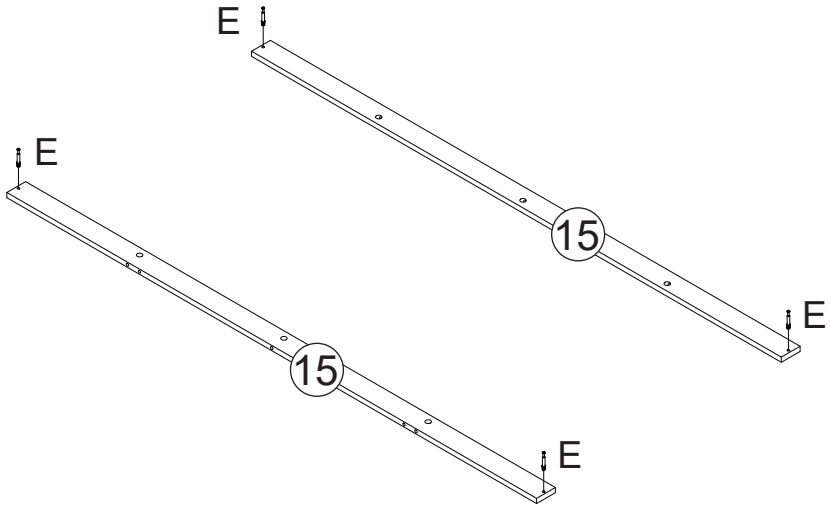


E 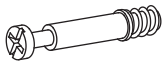 x4

## 26

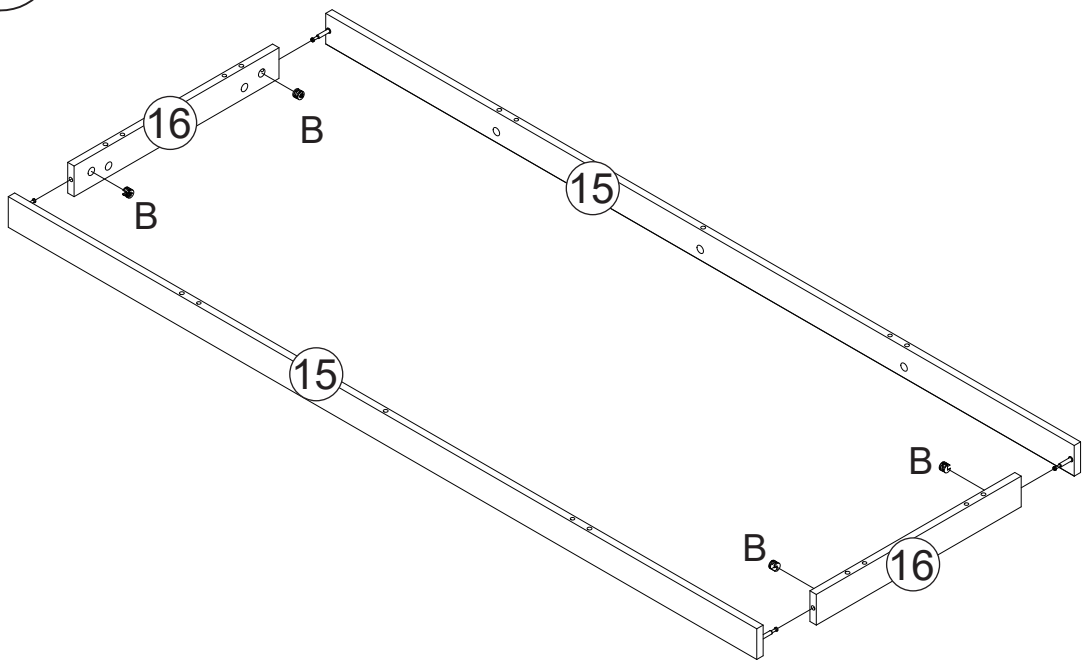


B  x4

# Assembly

## 27

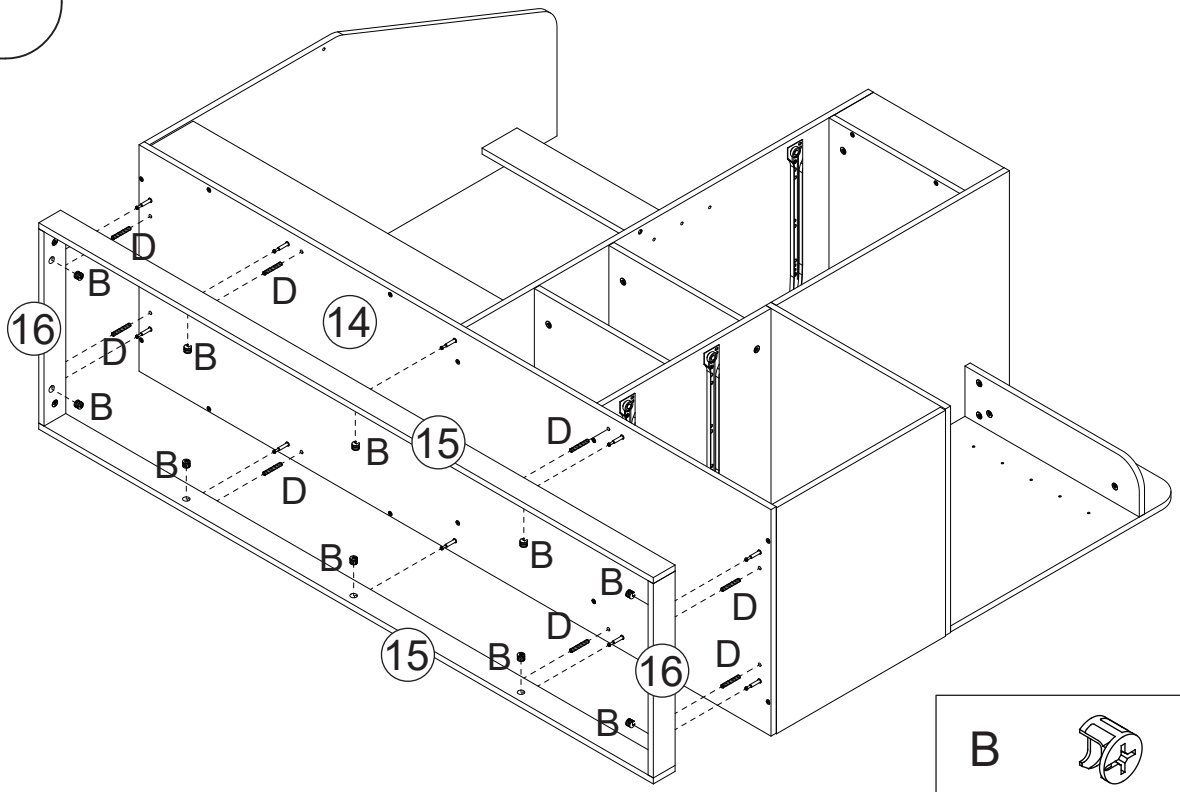


| | | |
|---|---|---|
| B |  | x10 |
| D |  | x8 |

## 28

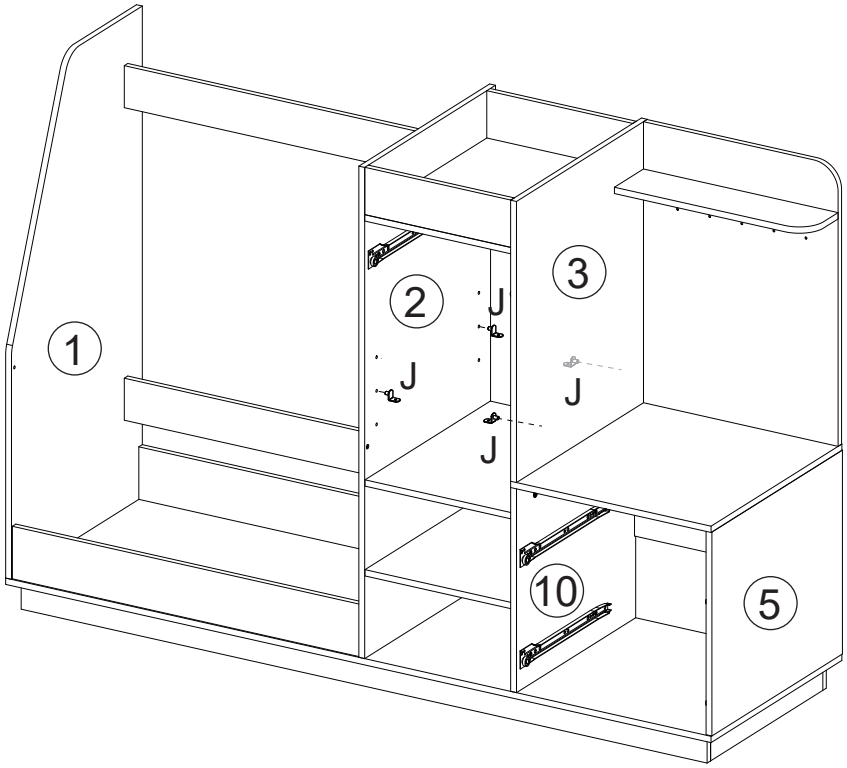


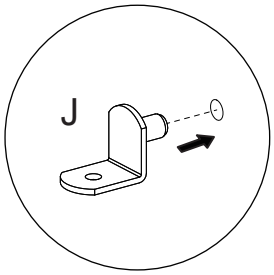


| | | |
|---|---|---|
| J |  | x4 |

# Assembly

## 29

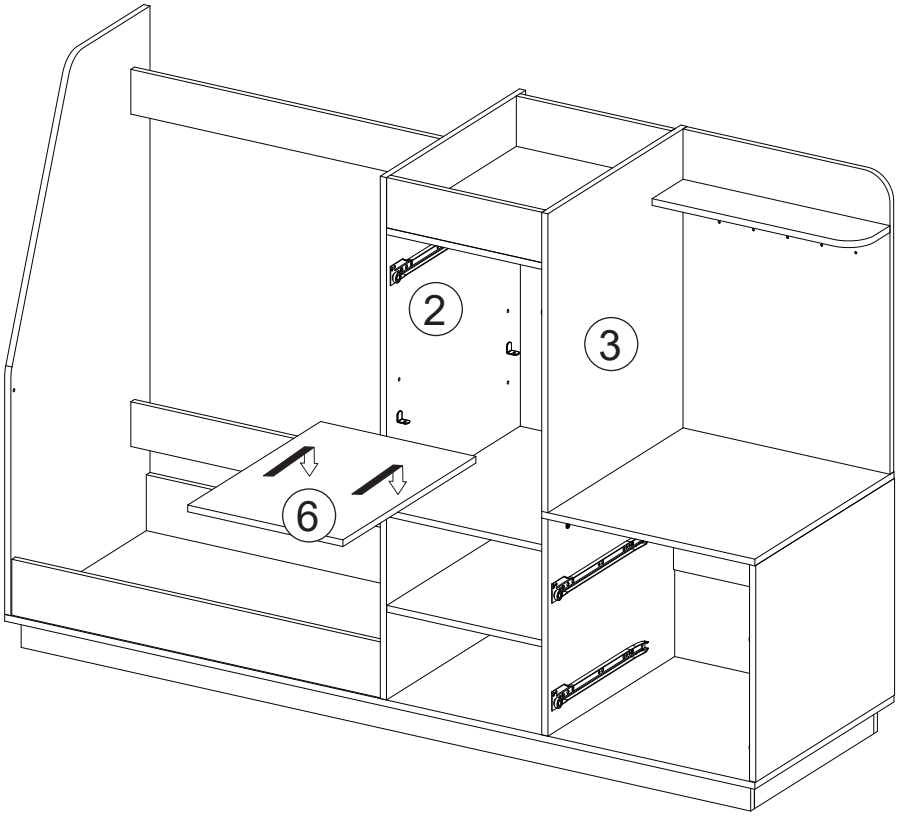


## 30

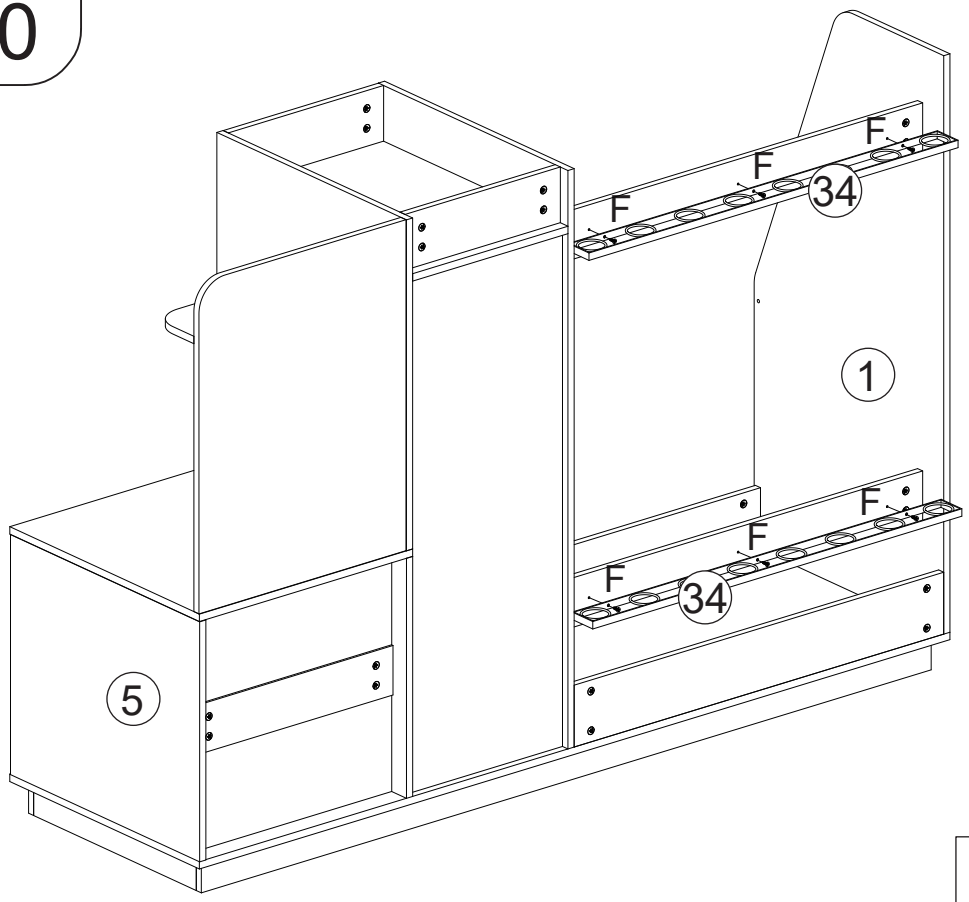


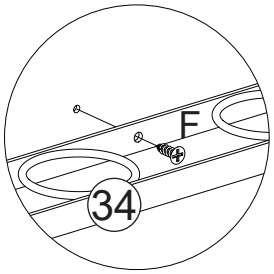


F  x6

# Assembly

## 31

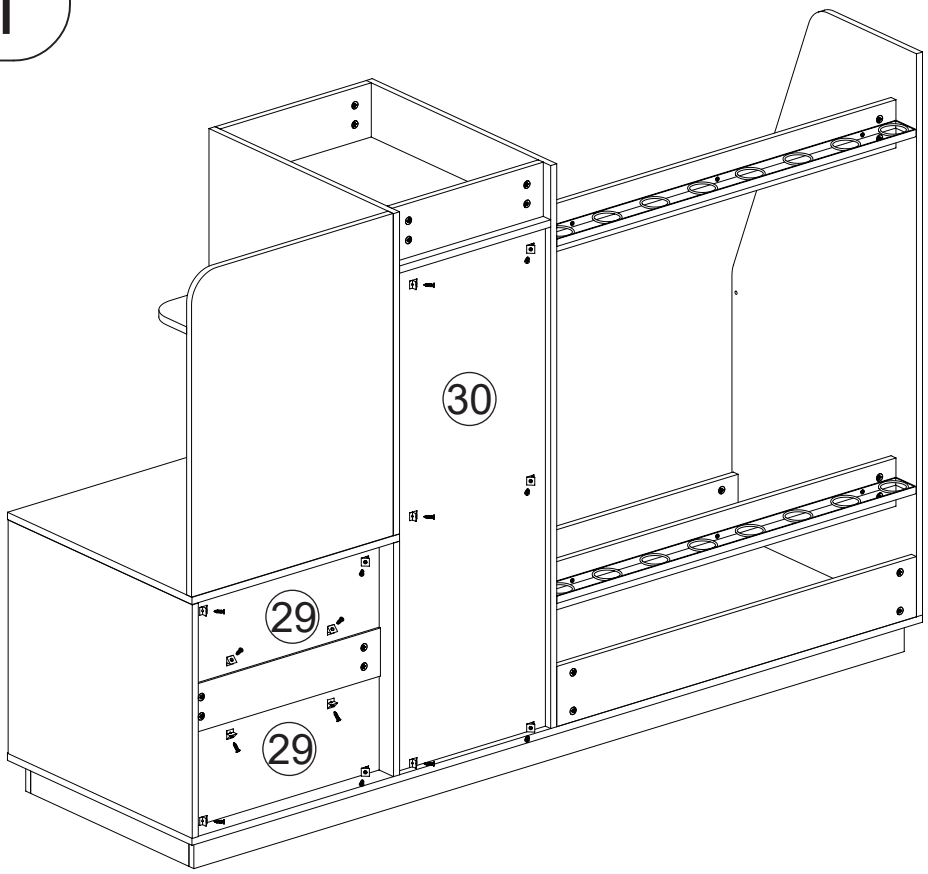


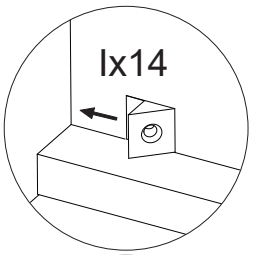





| | | |
|---|---|---|
| I |  | x14 |
| G | 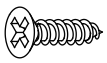 | x14 |

## 32

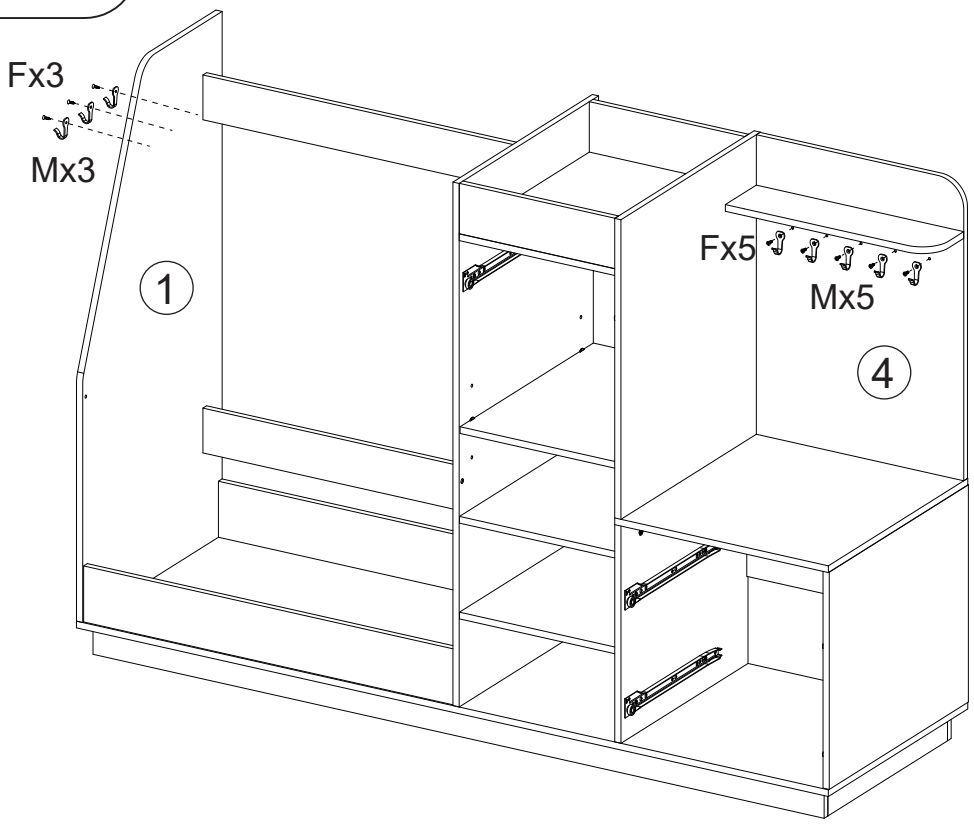


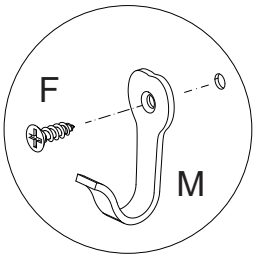


| | | |
|---|---|---|
| M |  | x8 |
| F |  | x8 |

# Assembly

## 33

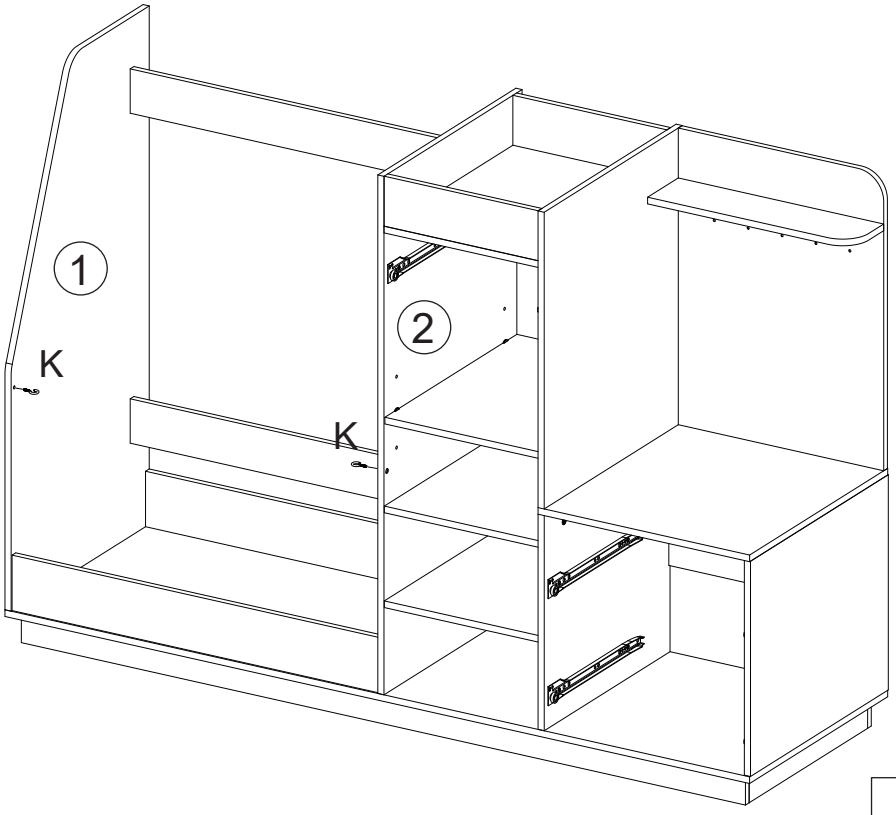


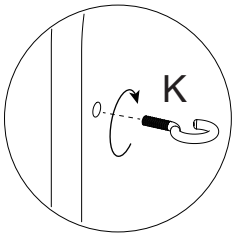


K  x2

## 34

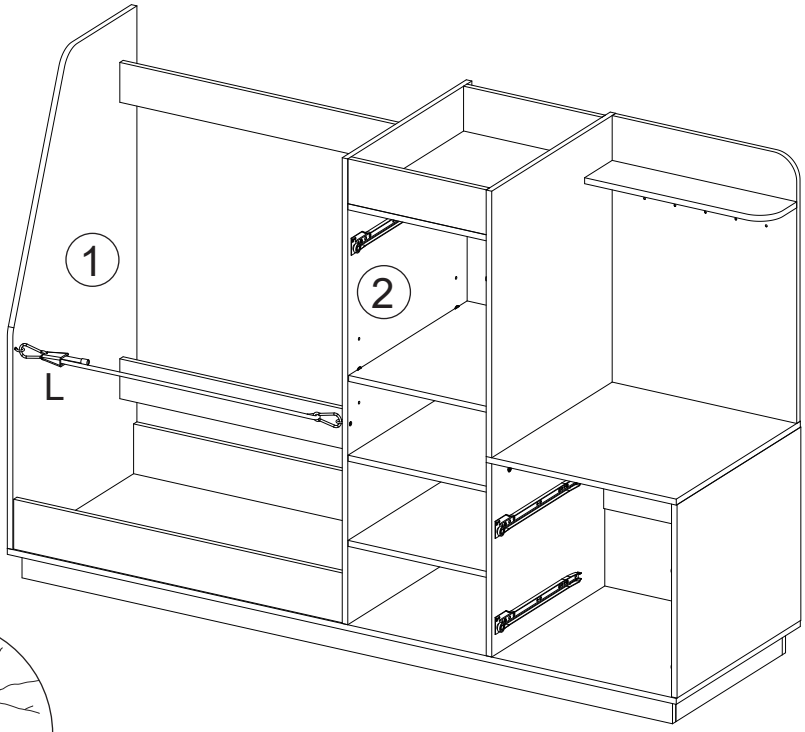


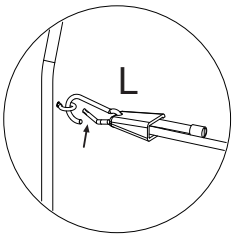


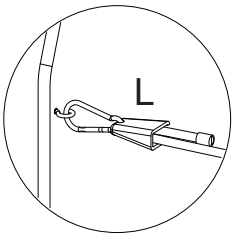


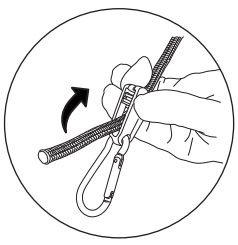

The tightness can be adjusted via the cord according to actual needs.

L  x1

# Assembly

## 35

The following are the assembly steps for the three drawers.

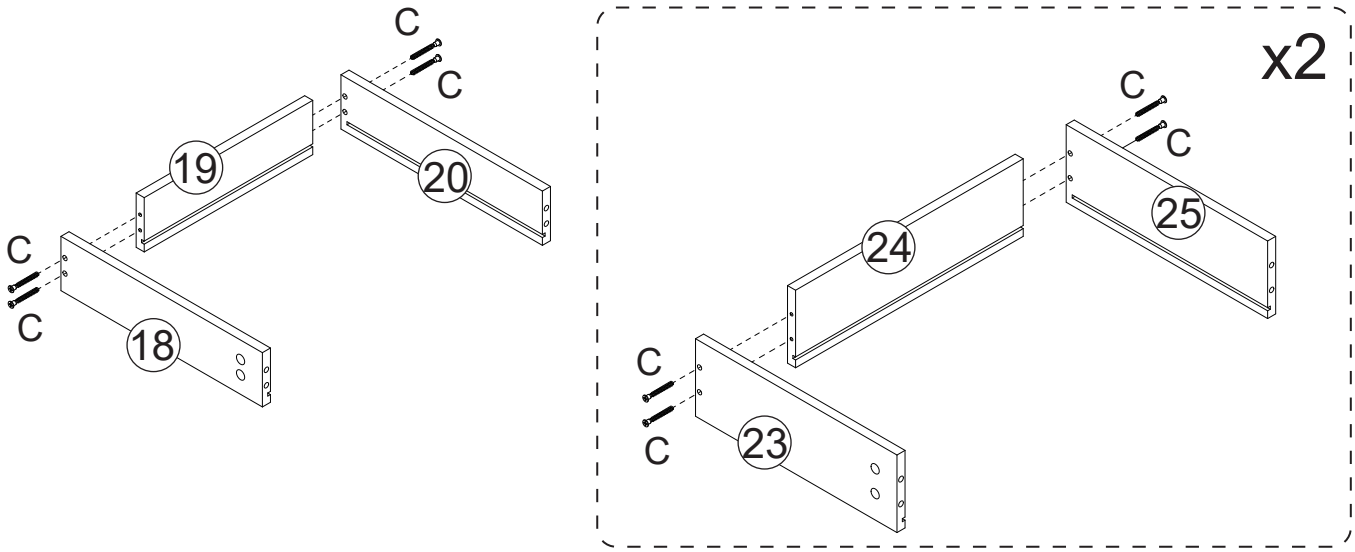


C 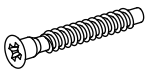 x12

## 36

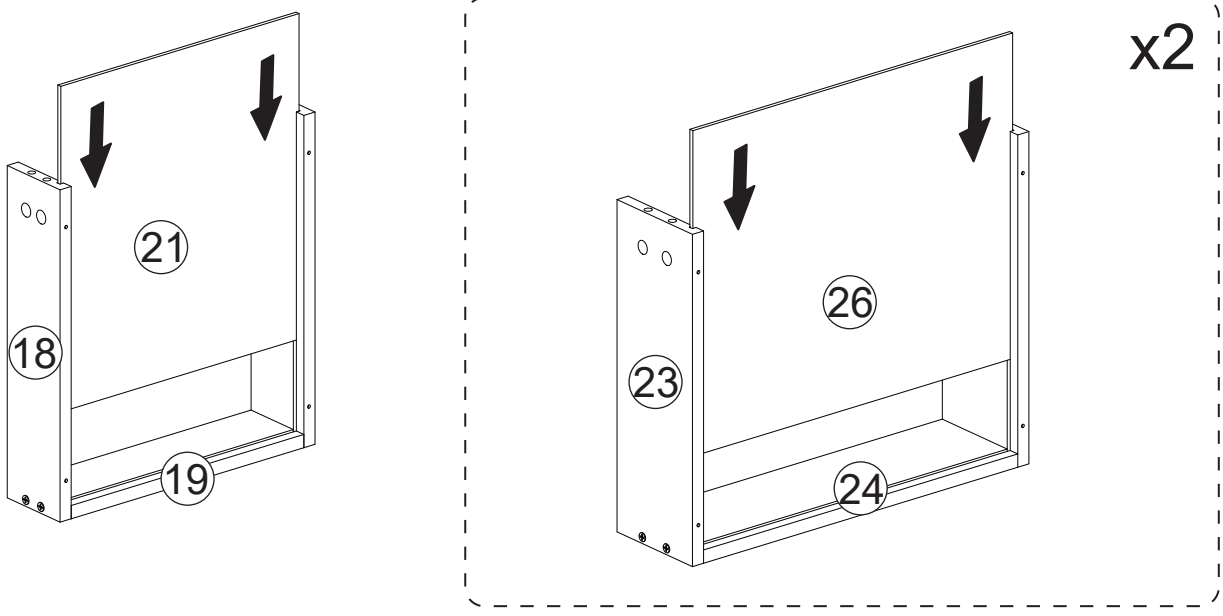

# Assembly

## 37

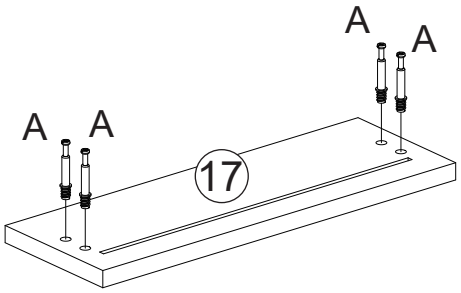


x2

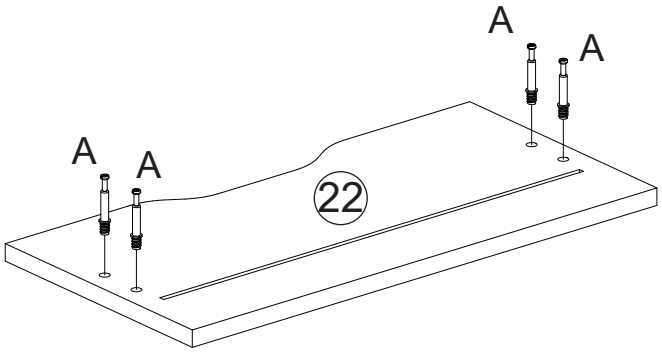


A 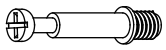 x12

## 38

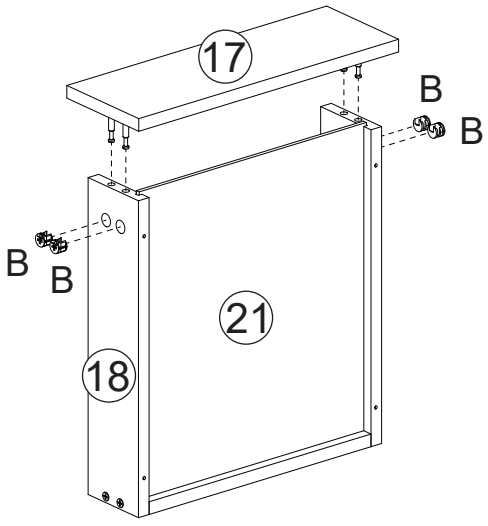


x2

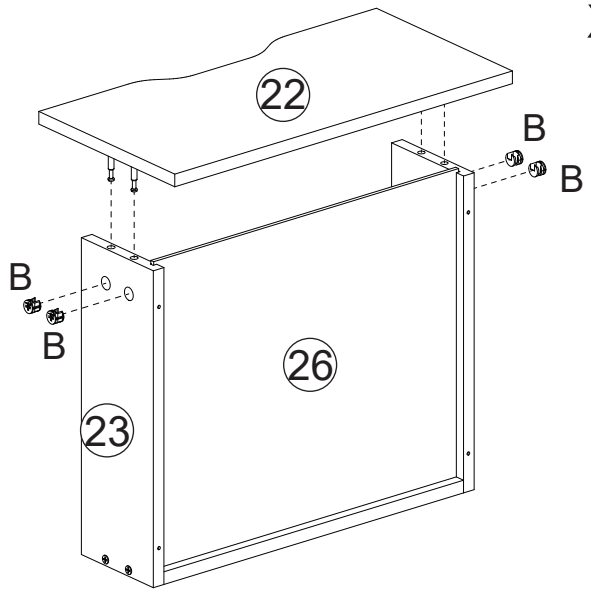


B  x12

# Assembly

## 39

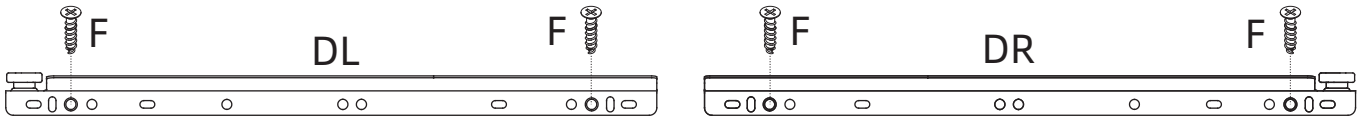


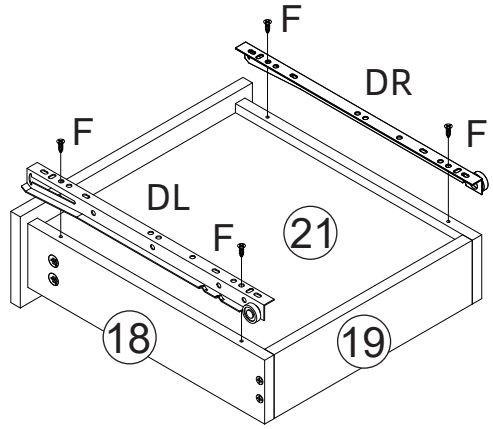


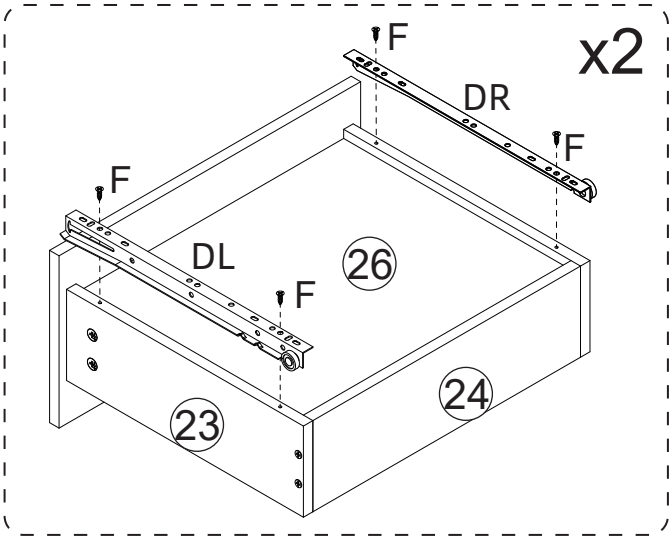


| | | | | | |
|---|---|---|---|---|---|
| H | 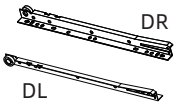  | x3 | F | 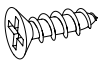 | x12 |

## 40

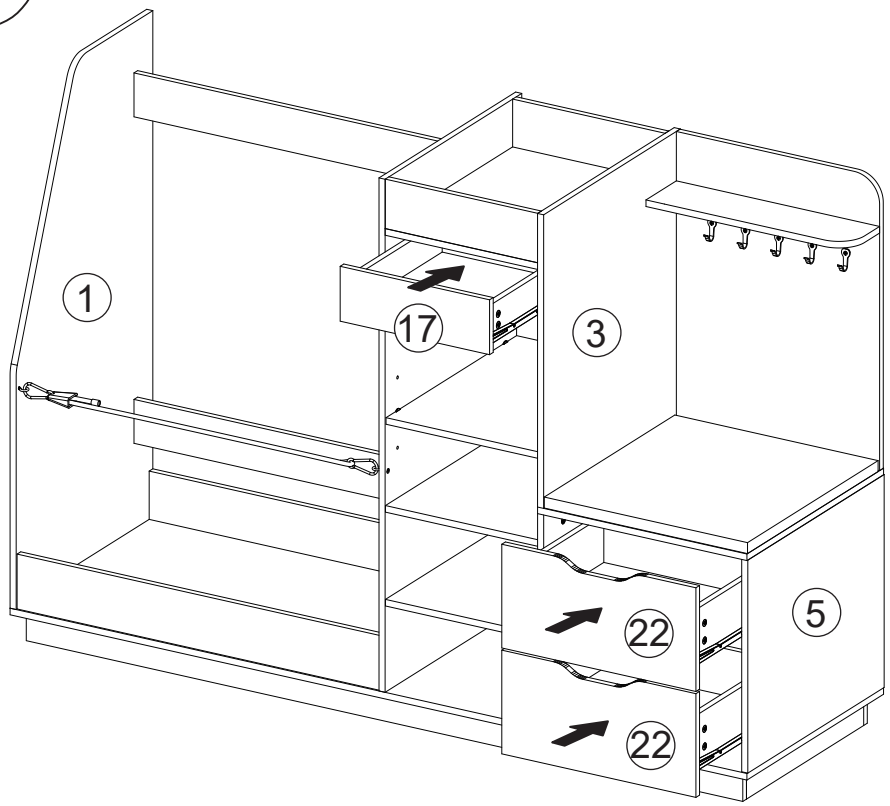


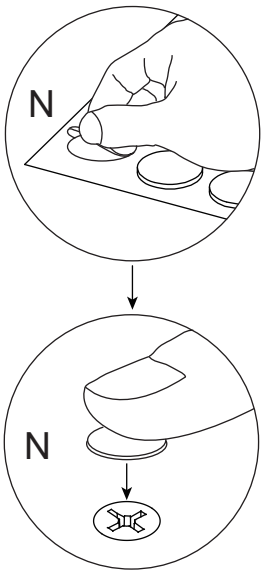


| | | |
|---|---|---|
| N | 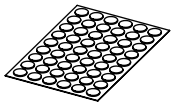 | x1 |

# Assembly

## 41

Please peel off the paster and stick the pad on the needed area.

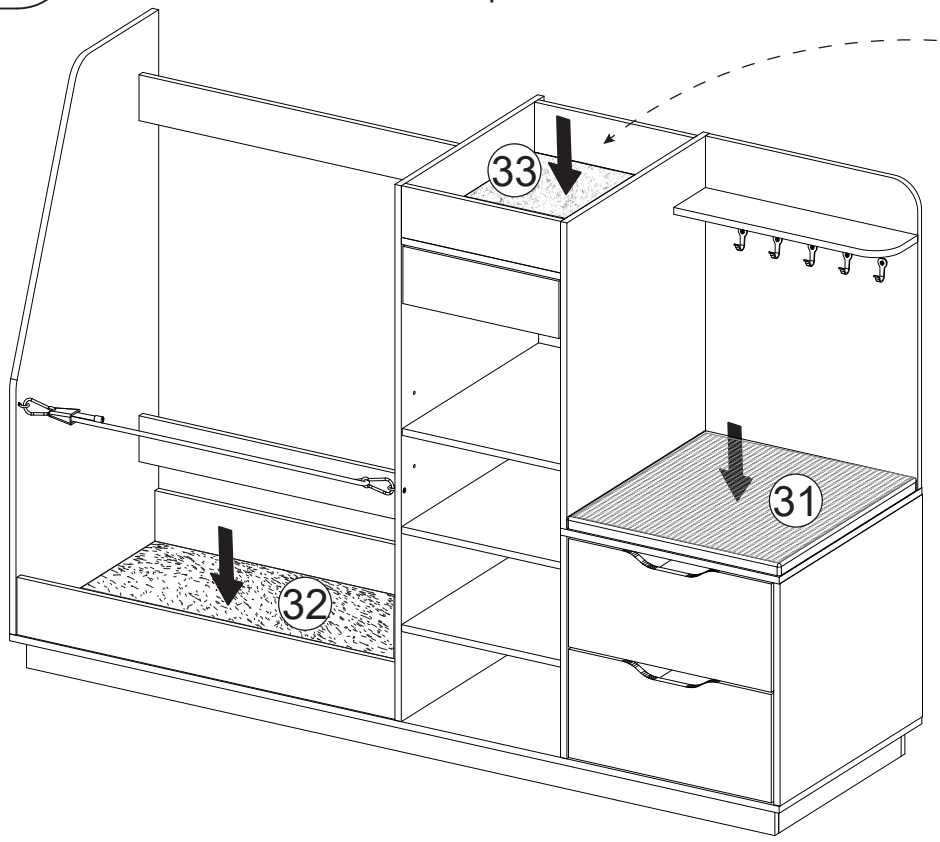


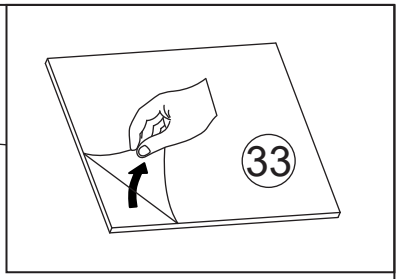


## 42

**⚠ WARNING**





Children have died from furniture tipover. To reduce the risk of furniture tipover:

- ALWAYS install tipover restraint provided.
- NEVER put a TV on this product.
- NEVER allow children to stand, climb or hang on drawers, doors, or shelves.
- NEVER open more than one drawer at a time.
- Place heaviest items in the lowest drawers.