Fireplace Cabinet

Electric Fireplace Cabinet User Manual

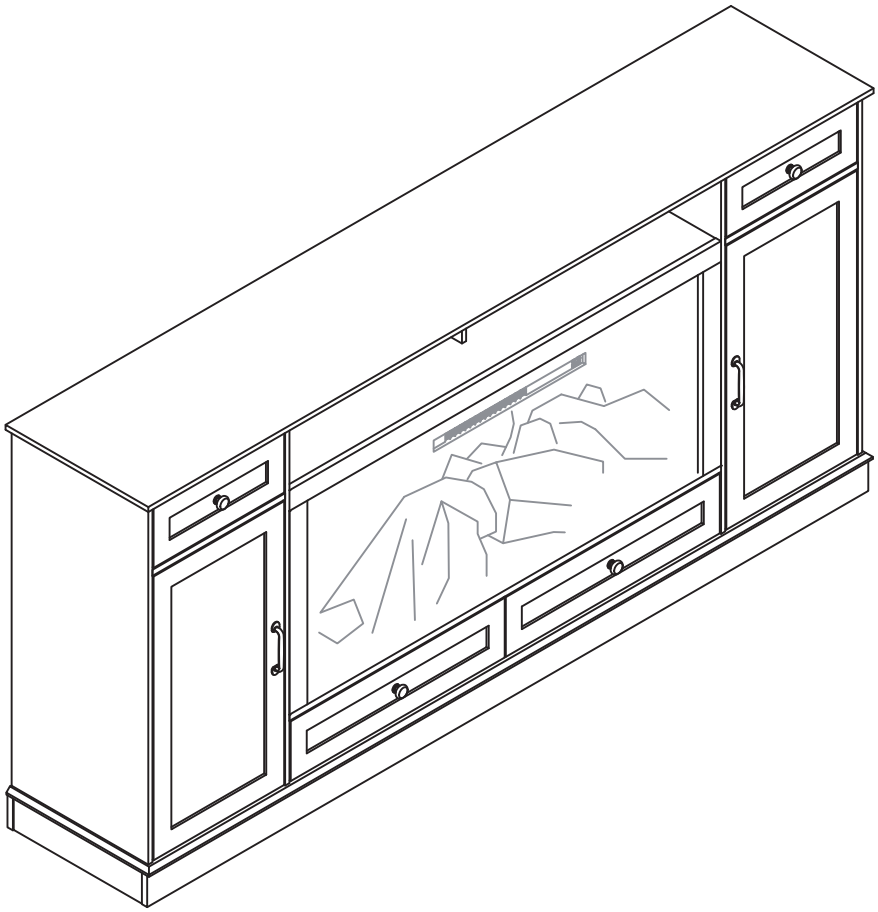



IMPORTANT:

1. **Please read the instructions carefully before assembling the product.**
2. Before starting the assembly, carefully check the package to ensure all necessary parts and components are included.
3. Before assembly, place all parts and components in a flat, open area. Make sure you have the correct parts before securing them with screws
4. This manual may not cover every detail of the parts and steps. If you need further assistance, please contact us.
5. If you need assistance, please send us an email, and we will respond promptly.

Business Days: respond within 24 hours
Weekend: respond within 48 hours

WARNING:

1. During assembly, keep all small parts out of the reach of children, as they could be a choking hazard or cause injury if swallowed or inhaled.
2. Never allow children to climb on or play around the product to prevent injury caused by the product tipping over.
3. To avoid potential hazards, keep all parts and packaging away from children.

Maintenance:

1. Please place this item on a level, solid surface.
2. Do not stand or sit on the wooden boards.
3. Keep the product away from high-temperature environments or sources of fire.
4. If any water or liquid is accidentally spilled on the surface, immediately wipe it off with a dry towel.
5. Regularly inspect the tightness of screws during use. If necessary, re-tighten them to ensure structural stability.

● IMPORTANT INFORMATION

Read all instructions before using this appliance.

When using electrical appliances, basic precautions should always be followed to reduce the risk of fire, electrical shock, and injury to persons including the following:

1. When using the heating function, it is strictly prohibited to cover all air vents with objects.
2. It is prohibited to insert foreign objects into the air inlet and outlet, especially when using the heating function. It is strictly prohibited to touch the air outlet with your hands.
3. There should be no flammable or explosive dangerous goods around the placement of this machine.
4. To prevent electric shock, please remember to turn off the power before cleaning or opening the casing.
5. Before using the remote control, check the code and press the (+/-) keys at the same time.
6. High temperatures may be generated under certain abnormal conditions.
7. Do not partially or fully cover or obstruct the front of this heater.
8. Never leave the heater operating unattended. Extreme caution is necessary if unsupervised children or persons with a disability are nearby.
9. The appliance is not to be used by children or persons with reduced physical, sensory or mental capabilities, or lack of experience and knowledge, unless they have been given supervision or instruction.
10. Always unplug this appliance when not in use.
11. Do not operate any heater with a damaged cord or plug or after the heater malfunctions, has been dropped or damaged in any manner. Discard heater, or return to authorized service facility for examination and/or repair.
12. Do not use outdoors.
13. This heater is not intended for use in bathrooms, laundry areas and similar indoor locations. Never locate this appliance where it may fall into a bathtub or other water container.

14. Do not run cord under carpeting. Do not cover cord with throw rugs, runners or the like. Arrange cord away from traffic areas and where it will not be tripped over.
15. To disconnect heater, turn controls to the off, and turn off power to heater circuit at main disconnect panel (for operate internal disconnect switch if provided).
16. Connect to properly grounded outlets only. Do not use a 2 prong adapter. Never use with an extension cord or relocatable power tap (outlet/power strip) as shown in Fig.1.
17.Do not wipe the furnace body with a damp cloth when it is powered on as shown in Fig.2.

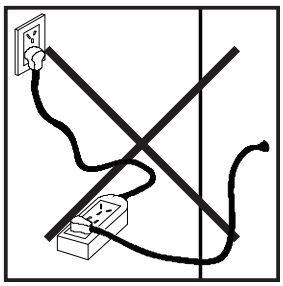

Fig.1

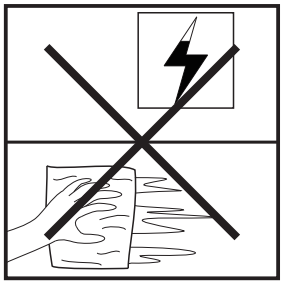

Fig.2

● BATTERY REPLACEMENT

NOTE: Do not mix old and new batteries.Do not mix alkaline, standard (carbon zinc), or rechargeable (Ni-Cd, Ni-MH) batteries.

CAUTION:

1. Always purchase the correct size (AAA) and grade of battery most suitable for the intended use.
2. Replace all batteries of a set at the same time.
3. Clean the battery contacts and also those of the device prior to battery installation.
4. Ensure the batteries are installed correctly with regard to polarity (+ and -).
5. Remove batteries from equipment which is not to be used for an extended period of time.
6. Remove used batteries promptly.
7. Some batteries may be overdischarged due to a difference of voltage or capacity. This can result in venting, leakage, and rupture and may cause personal injury.

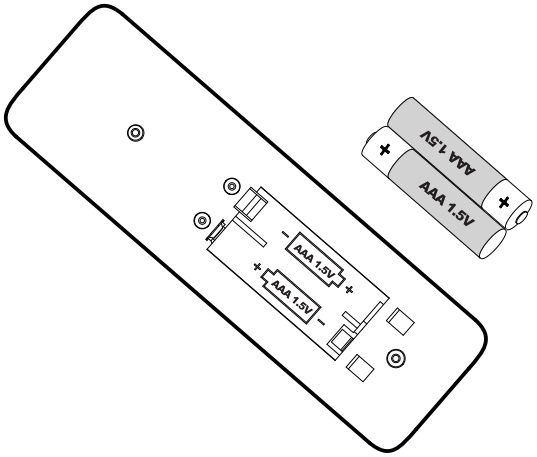

For recycling and disposal of batteries to protect the environment, please check the internet or your local phone directory for local recycling centers and/or follow local government regulations.

NOTE: Battery disposal Please always dipose of batteries at a suitable recycling point.

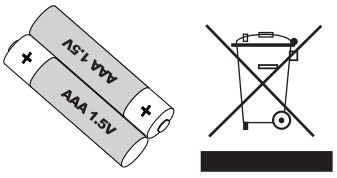

EXPLODED VIEW

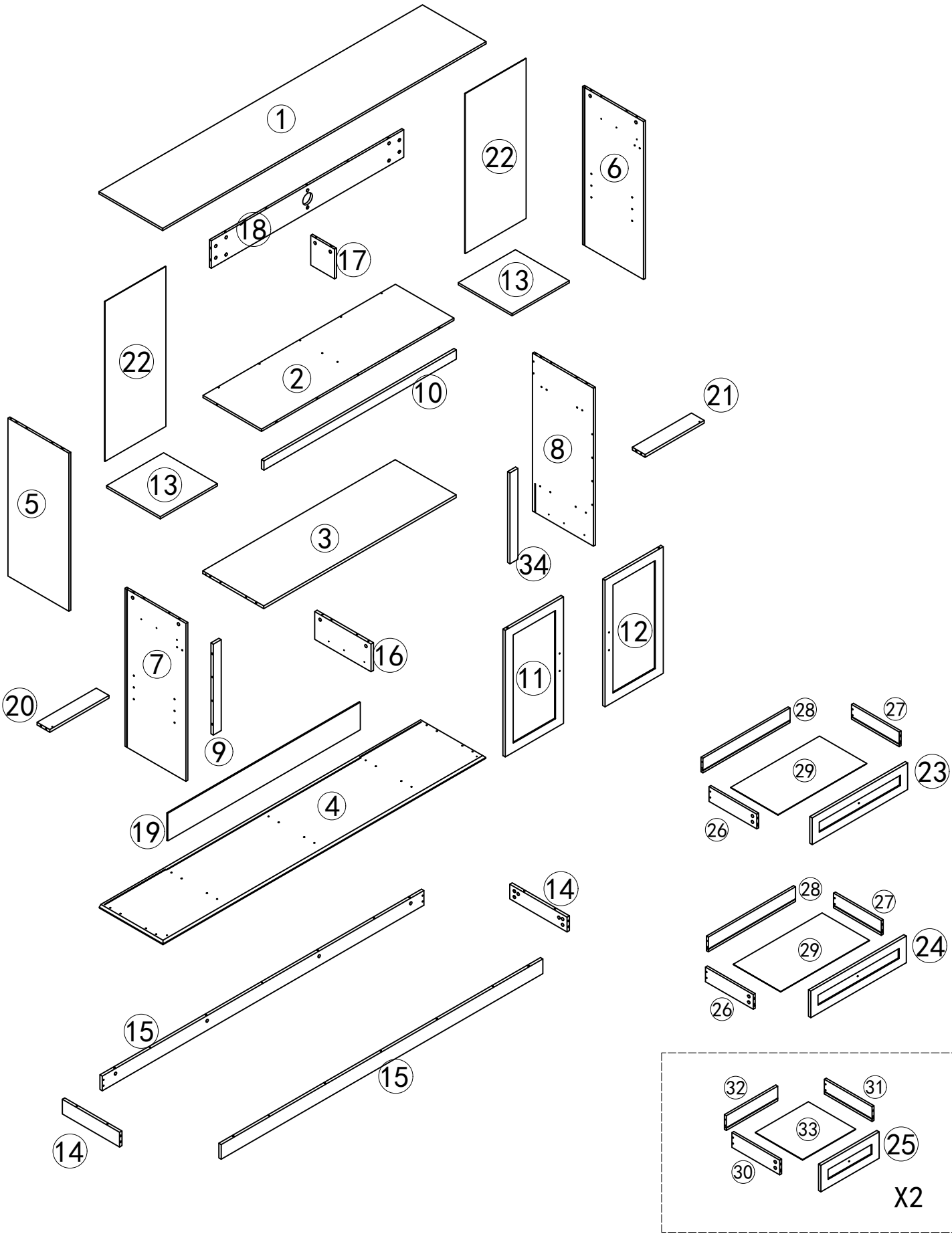

PART LIST

1 1PCS 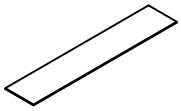	2 1PCS 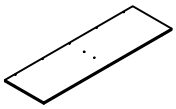	3 1PCS 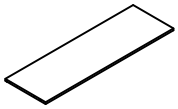	4 1PCS 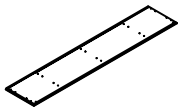	5 1PCS 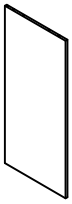	6 1PCS 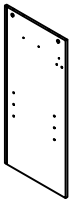
7 1PCS 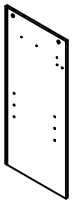	8 1PCS 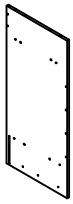	9 1PCS 	10 1PCS 	11 1PCS 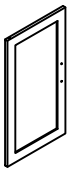	12 1PCS 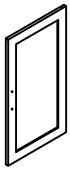
13 2PCS 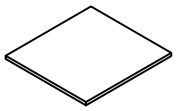	14 2PCS 	15 2PCS 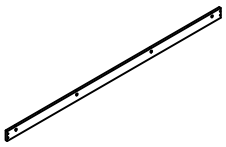	16 1PCS 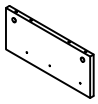	17 1PCS 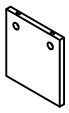	18 1PCS 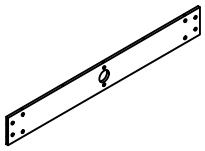
19 1PCS 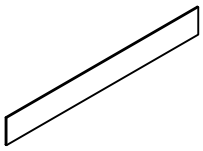	20 1PCS 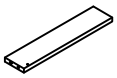	21 1PCS 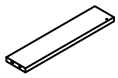	22 2PCS 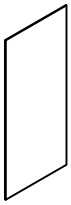	23 1PCS 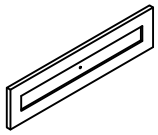	24 1PCS 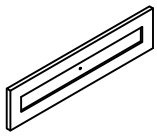
25 2PCS 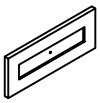	26 2PCS 	27 2PCS 	28 2PCS 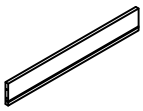	29 2PCS 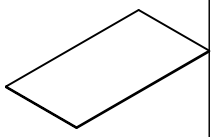	30 2PCS 
31 2PCS 	32 2PCS 	33 2PCS 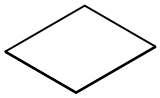	34 1PCS 		

HARDWARE LIST

A 4*35mm 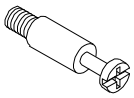 72+2 PCS	B 15*10mm  72+2 PCS	C 6*30mm 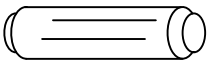 52+2 PCS	D 5*40mm  12+1 PCS	E 3.5*14mm  20+1 PCS	F 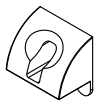 14 PCS
G 4*18mm  8 PCS	H  4 PCS	I 3*12mm  36+2 PCS	J 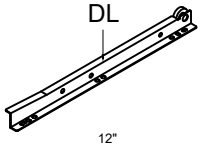 4 PCS	K 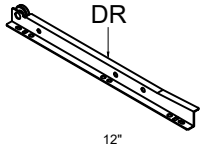 4 PCS	L 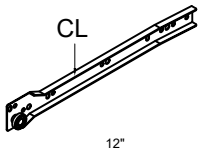 4 PCS
M 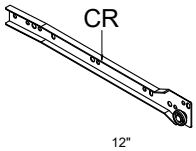 4 PCS	N 4*30mm 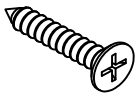 22+2 PCS	O  2 PCS	P  2 PCS	Q 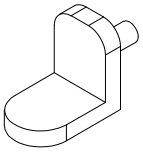 8 PCS	R 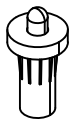 4 PCS
S  2 PCS	T 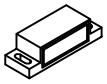 2 PCS	U 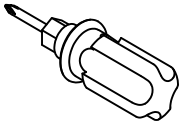 1 PCS			

ASSEMBLY STEP

STEP:1

A

8 PCS

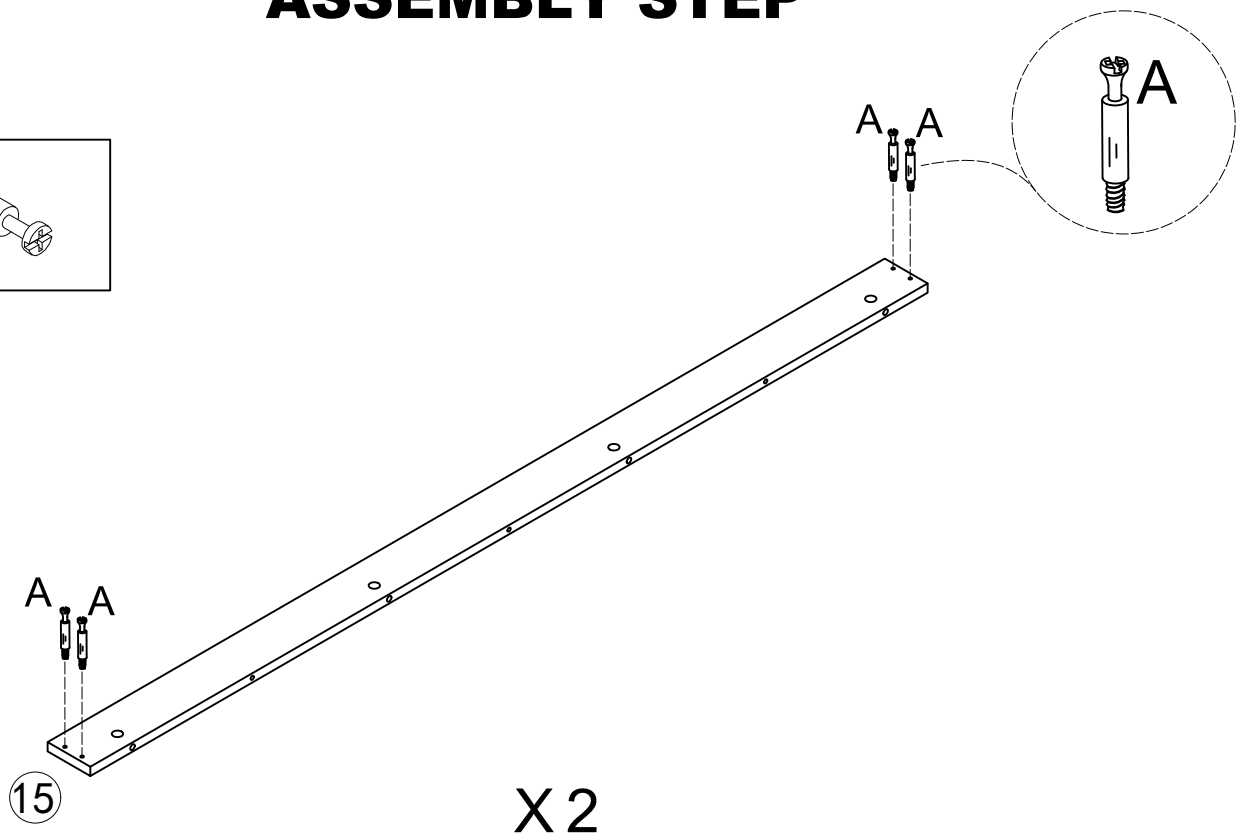

X 2

STEP:2

B

8 PCS

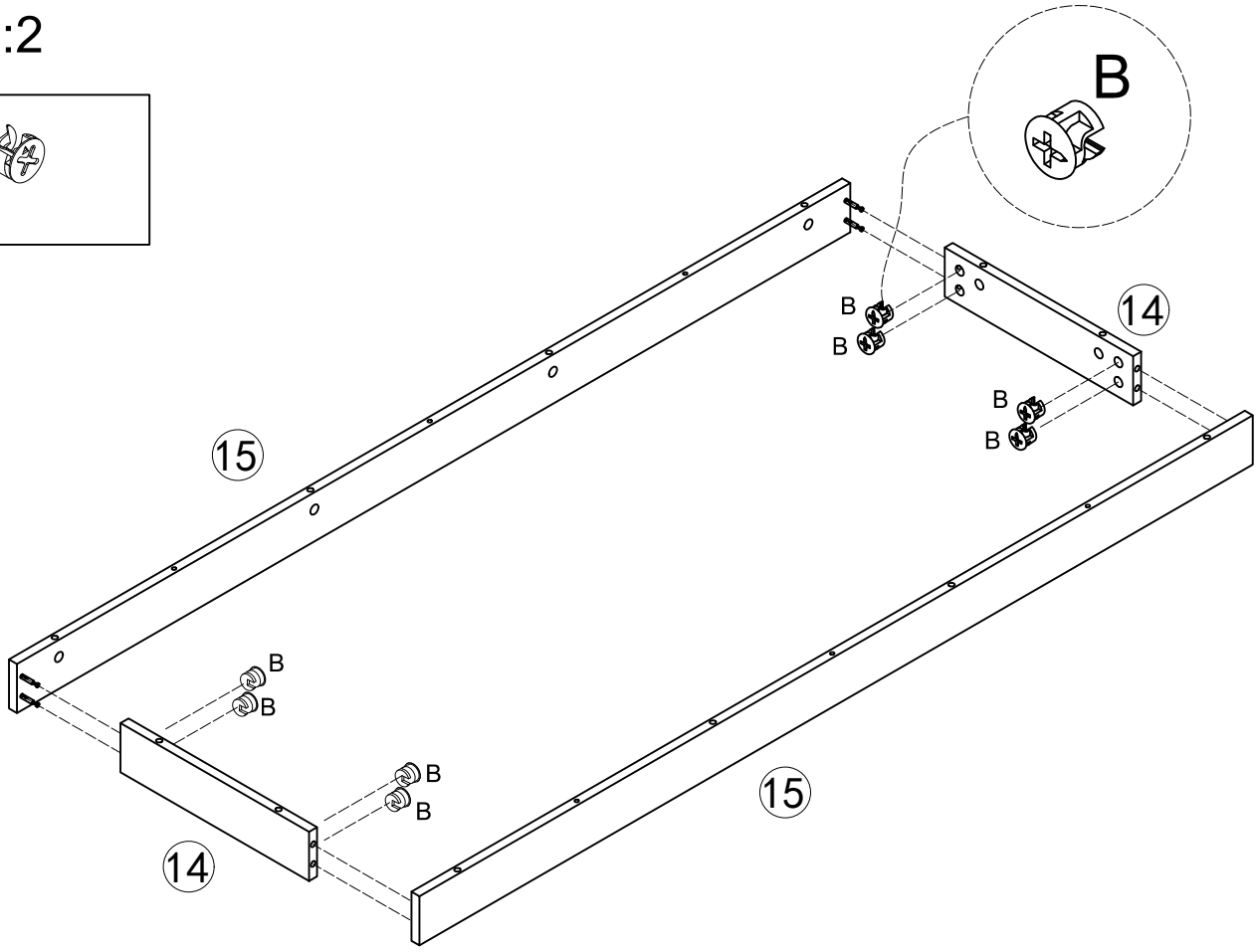

ASSEMBLY STEP

STEP:3

I	L	M
	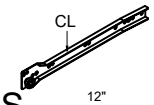	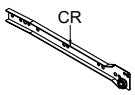
6 PCS	1 PCS	1 PCS

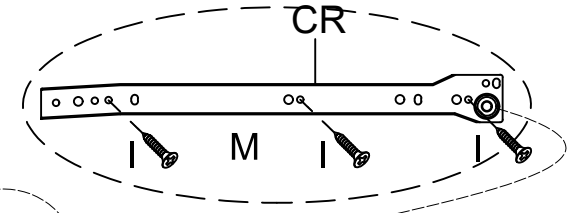

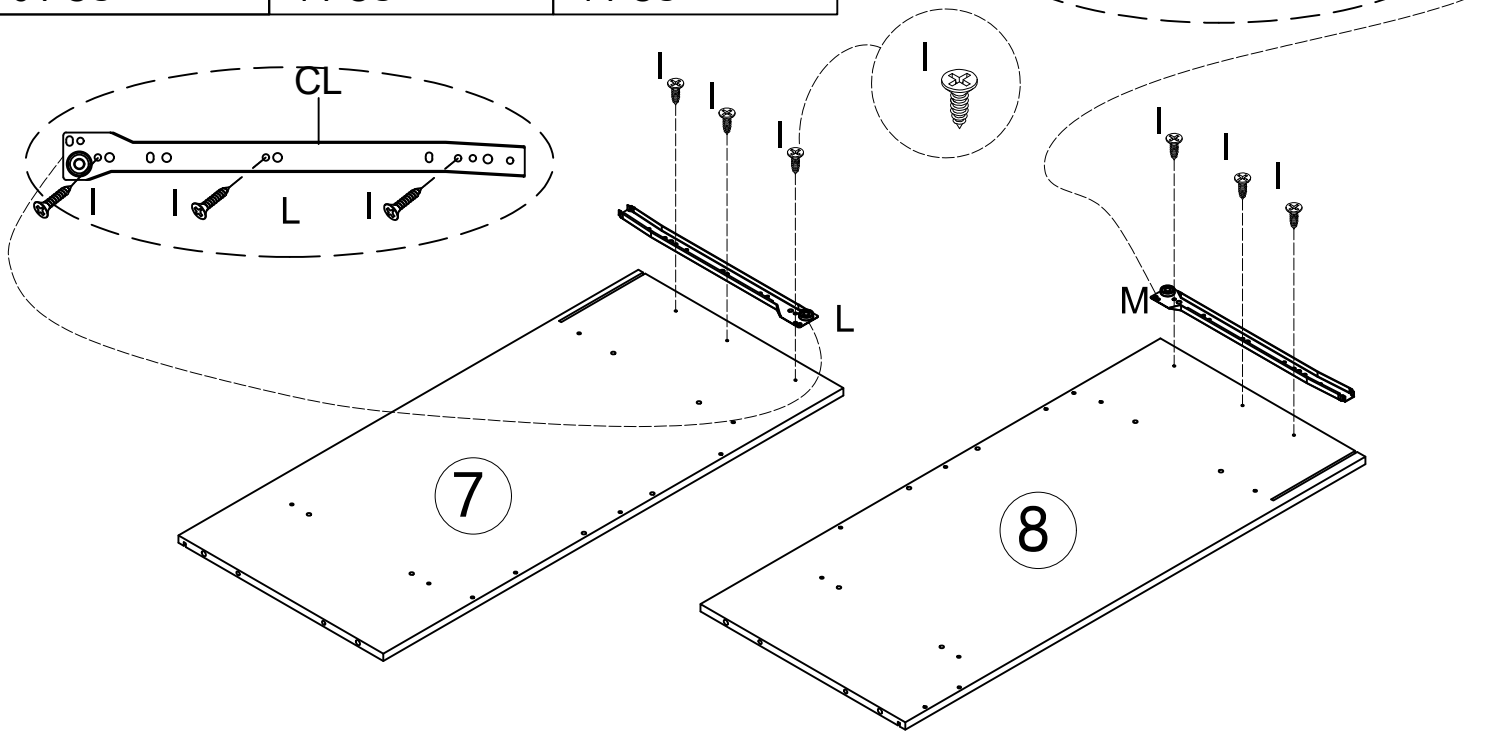

STEP:4

A
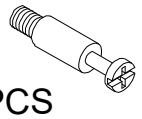
10 PCS

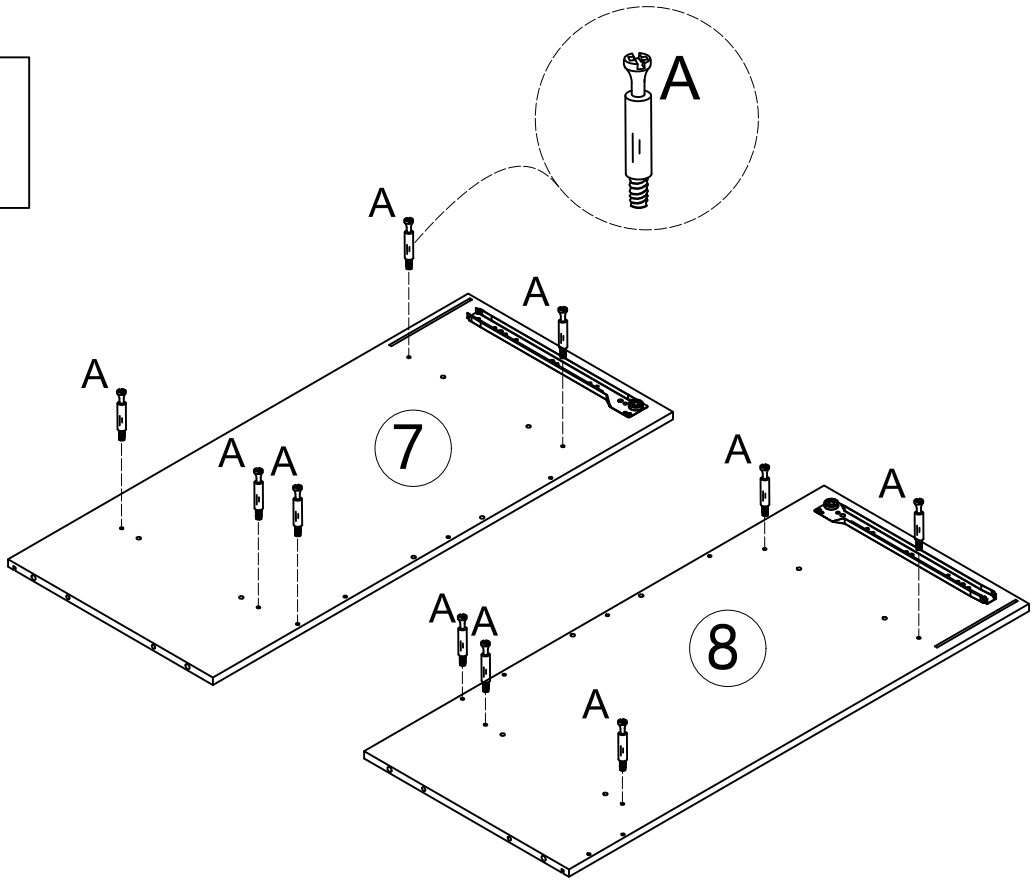

ASSEMBLY STEP

STEP:5

I	L	M
6 PCS	1 PCS	1 PCS

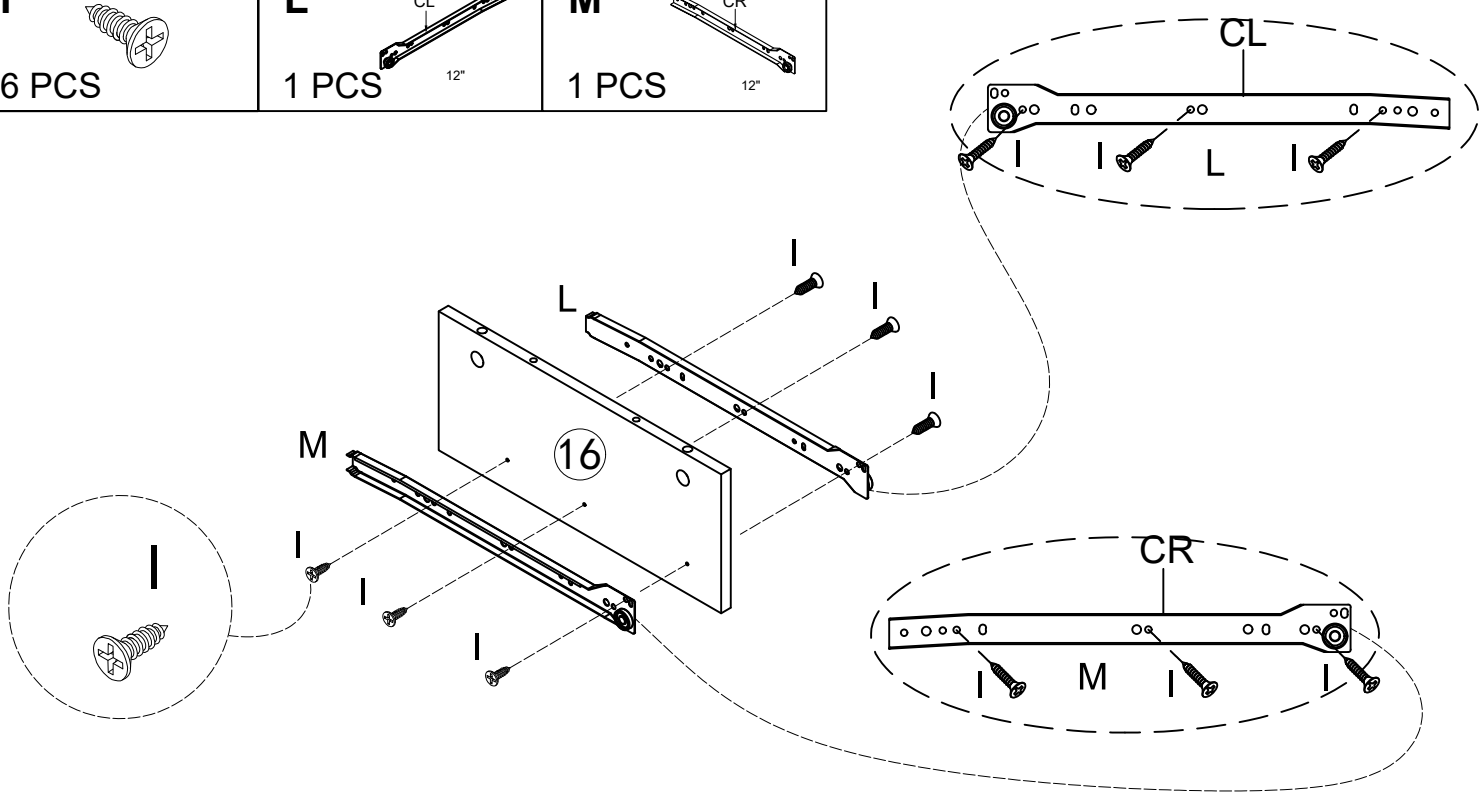

STEP:6

A	I	L	M
2 PCS	6 PCS	1 PCS	1 PCS

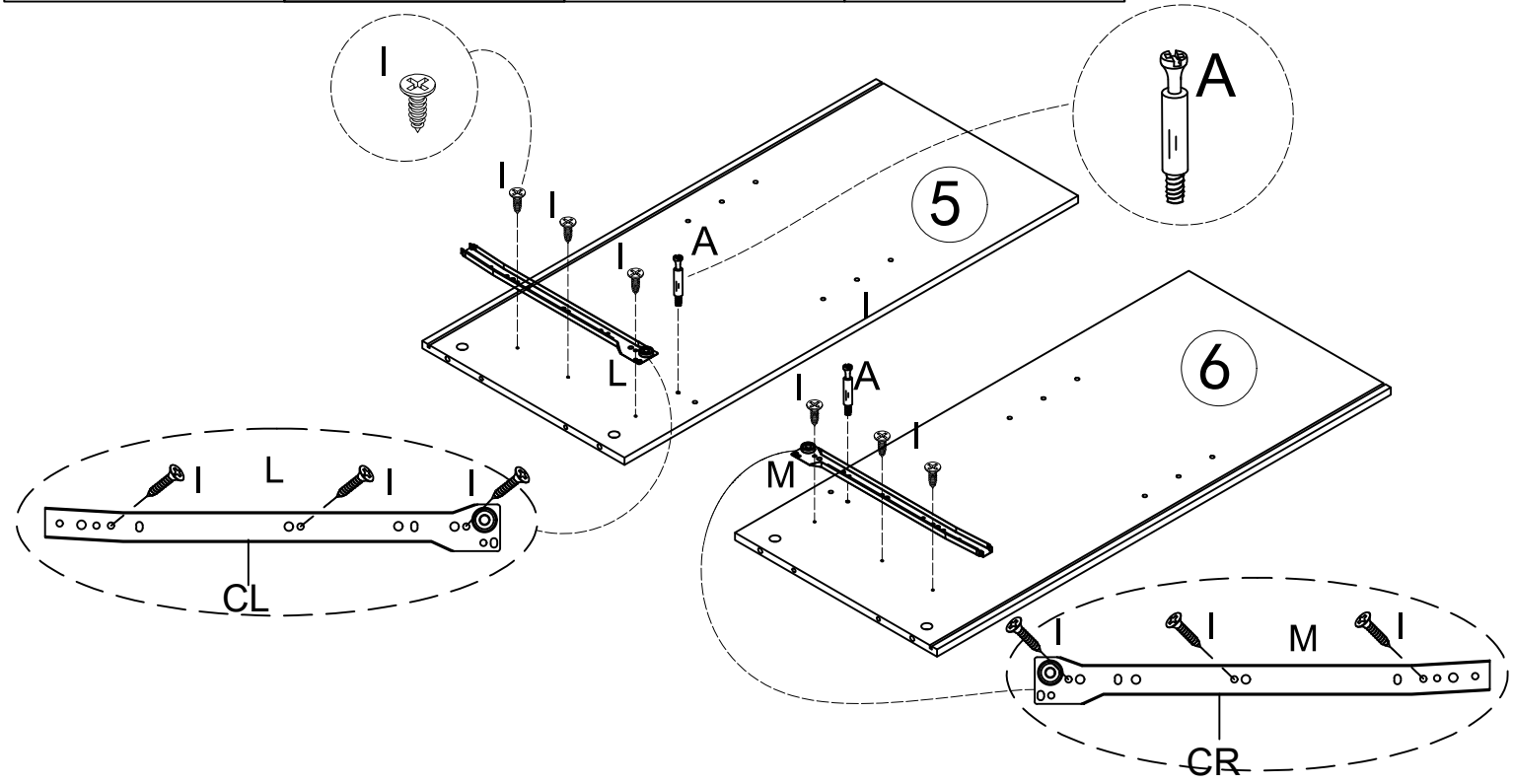

ASSEMBLY STEP

STEP:7

A 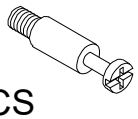 2 PCS	**I**  6 PCS	**L** 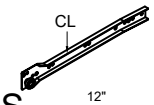 1 PCS	**M** 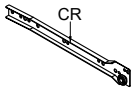 1 PCS

STEP:8

N 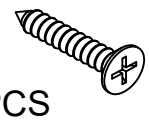 6 PCS	**C** 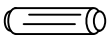 4 PCS

ASSEMBLY STEP

STEP:9

A
2 PCS

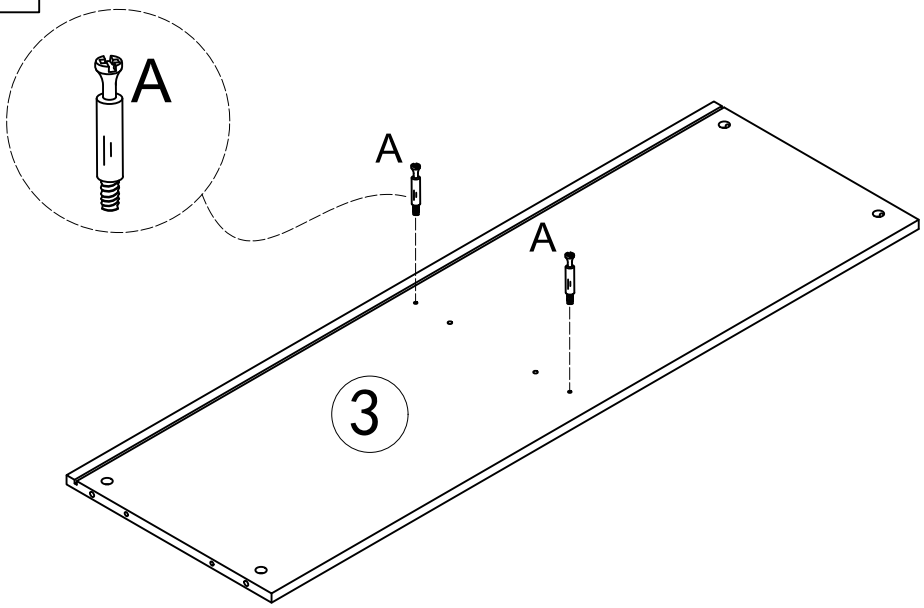

STEP:10

B	C
2 PCS	2 PCS

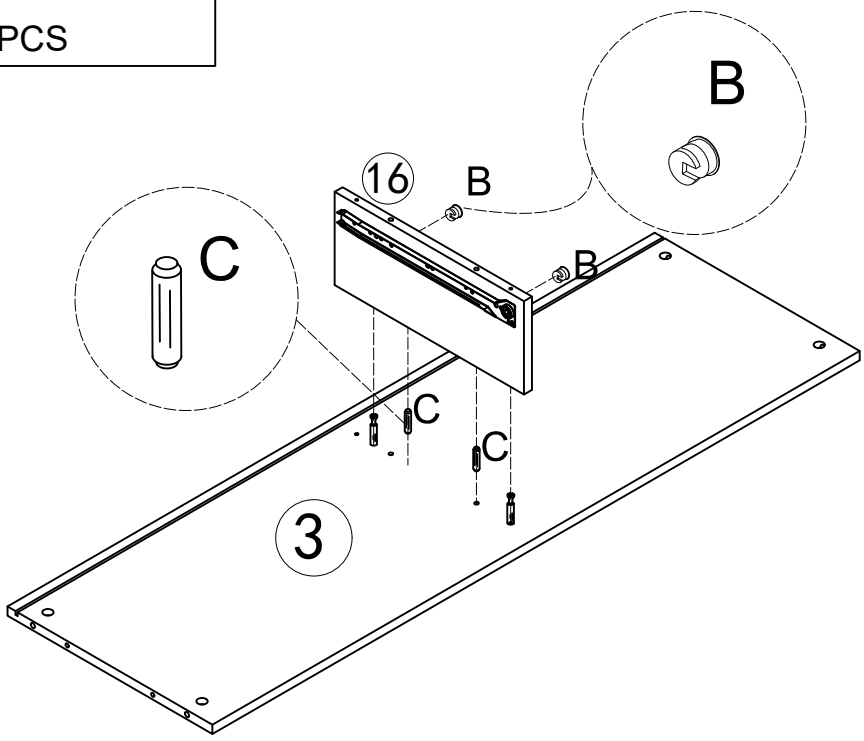

ASSEMBLY STEP

STEP:11

A
4 PCS

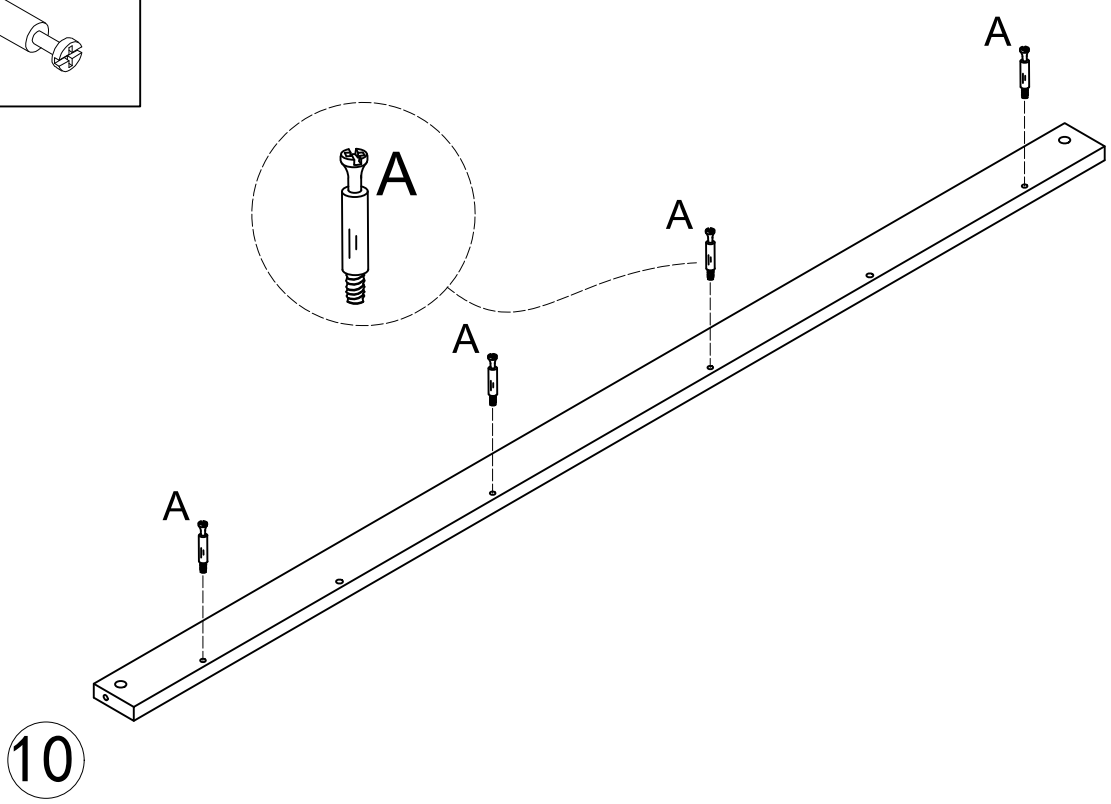

STEP:12

B	C
4 PCS	2 PCS

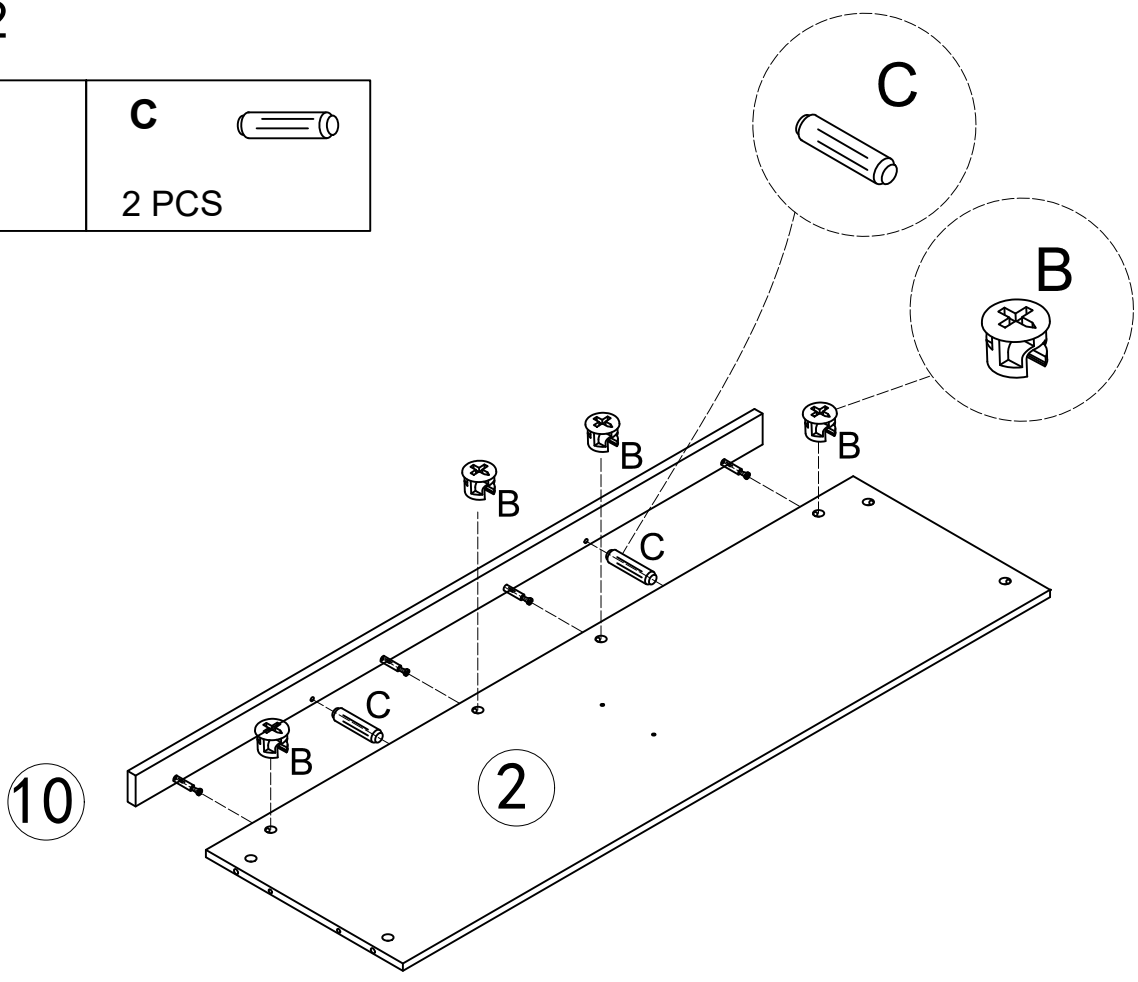

ASSEMBLY STEP

STEP:14

A

3 PCS

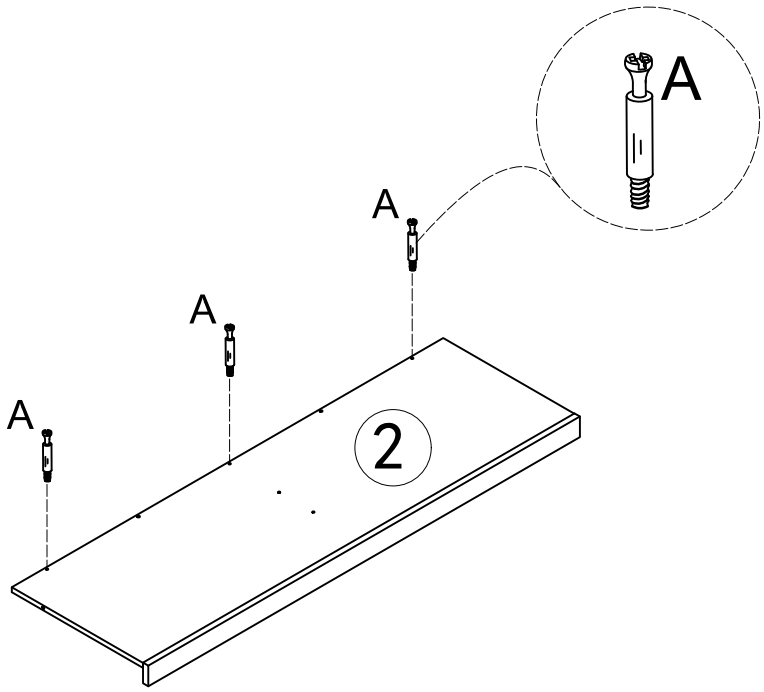

STEP:15

D

2 PCS

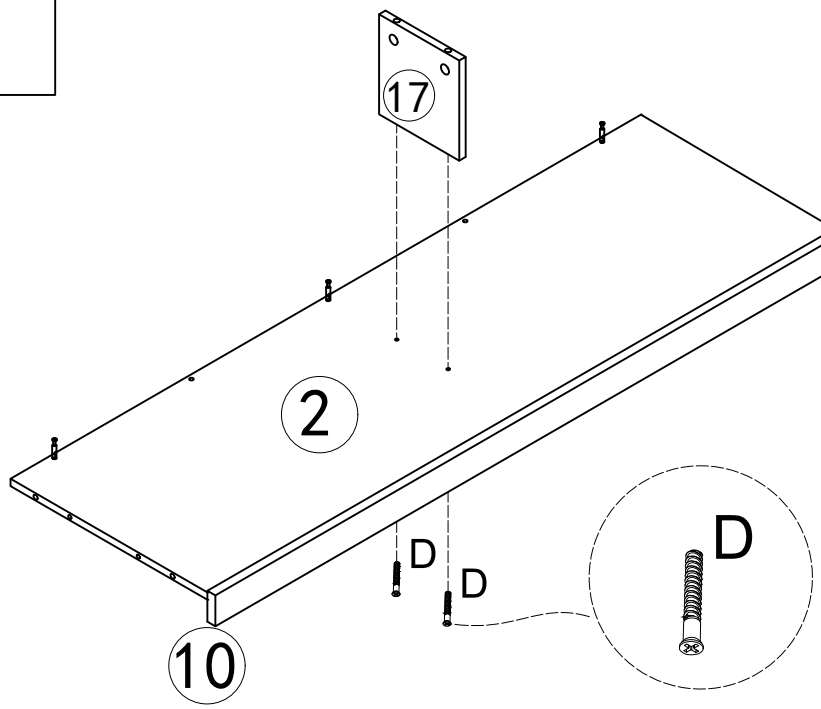

ASSEMBLY STEP

STEP:16

B	C
3 PCS	2 PCS

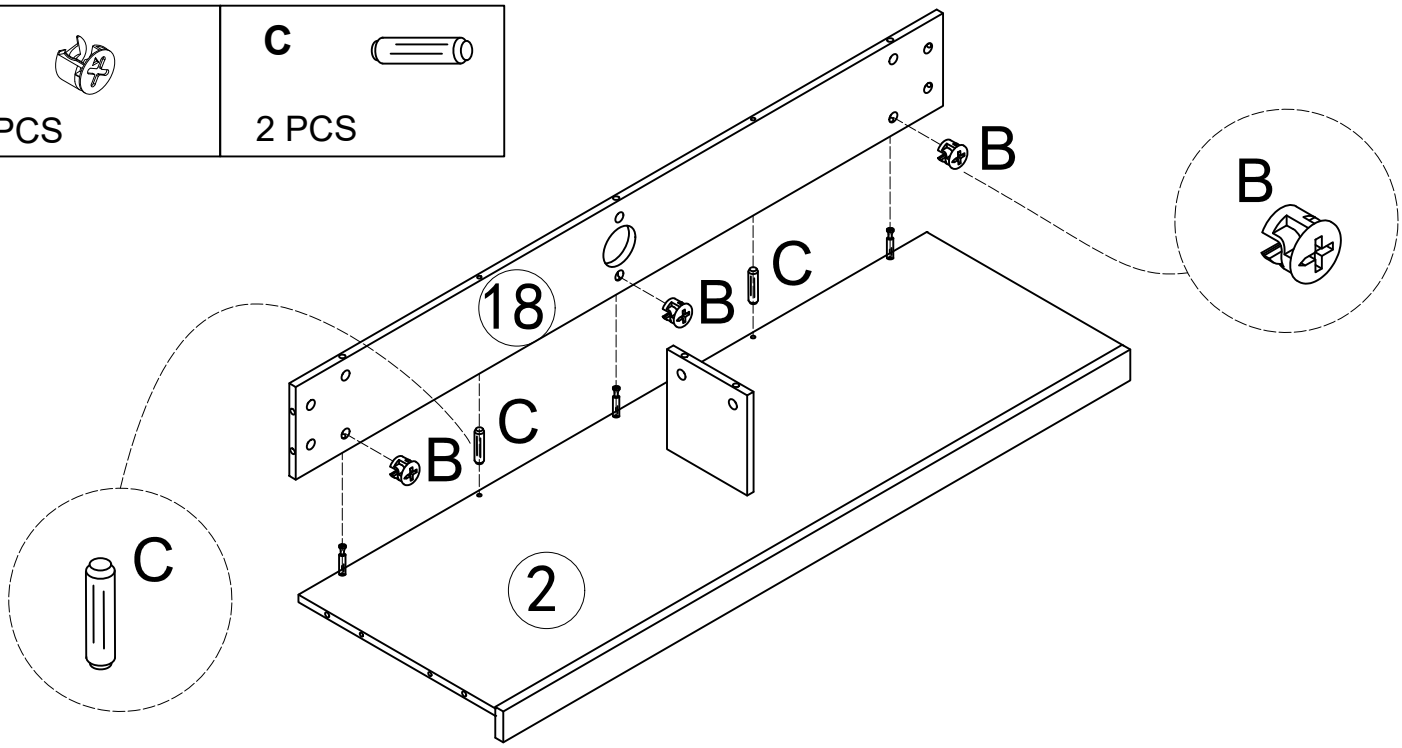

STEP:17

B	C
14 PCS	8 PCS

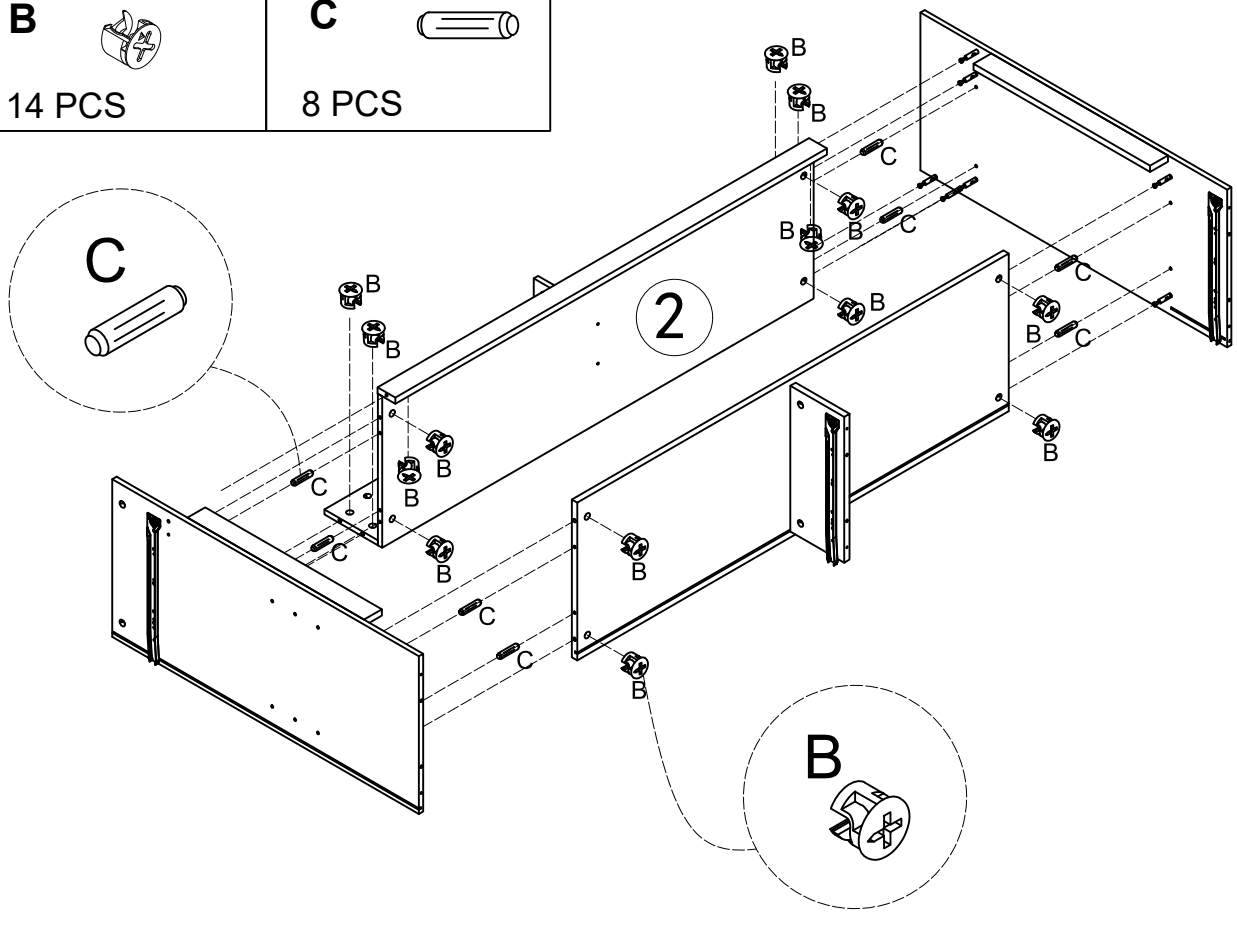

ASSEMBLY STEP

STEP:18

E	T
4 PCS	2 PCS

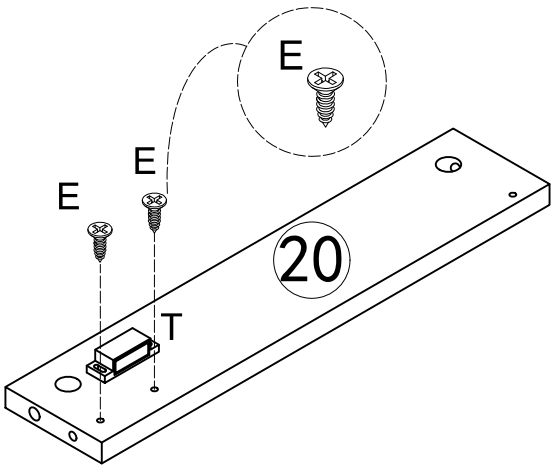

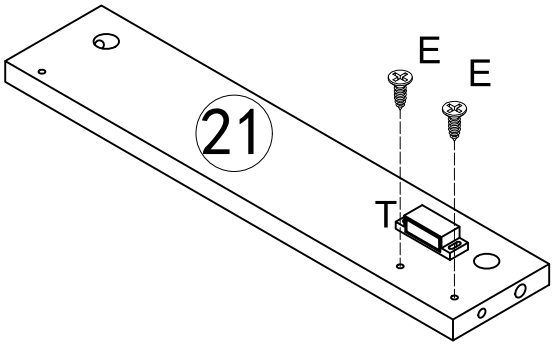

STEP:19

B	C
4 PCS	4 PCS

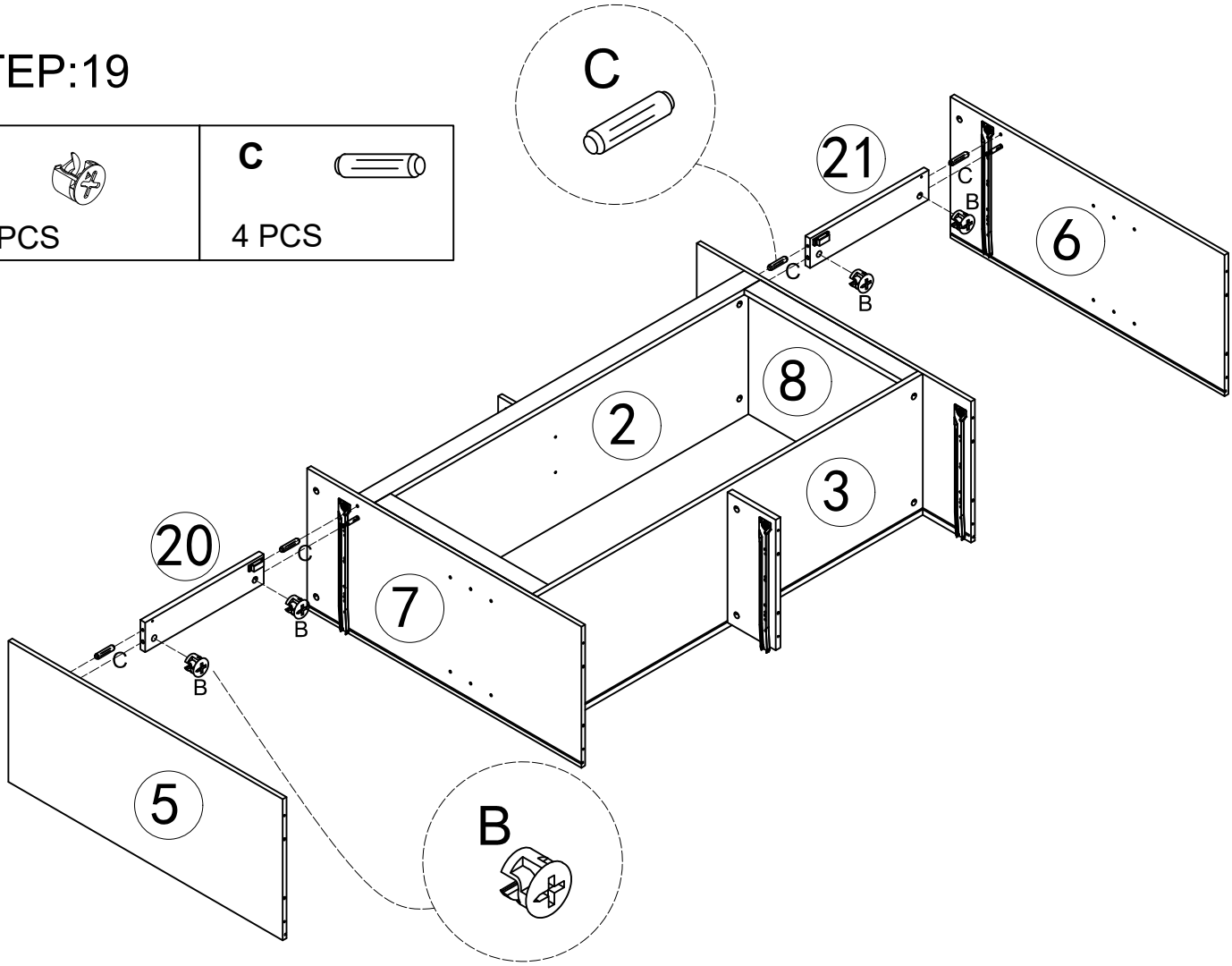

ASSEMBLY STEP

STEP:20

A	
13 PCS	

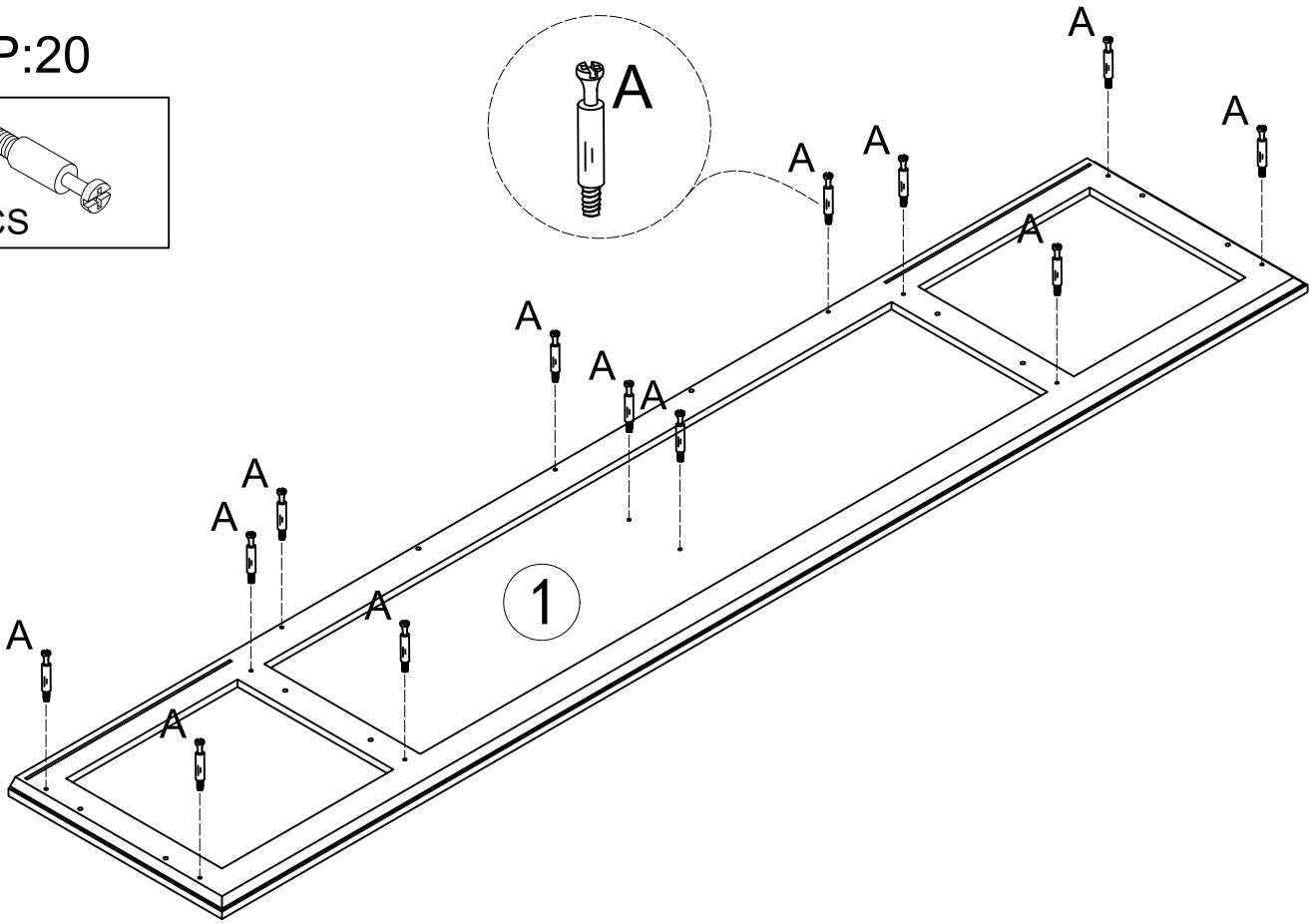

STEP:21

B	C
13 PCS	10 PCS

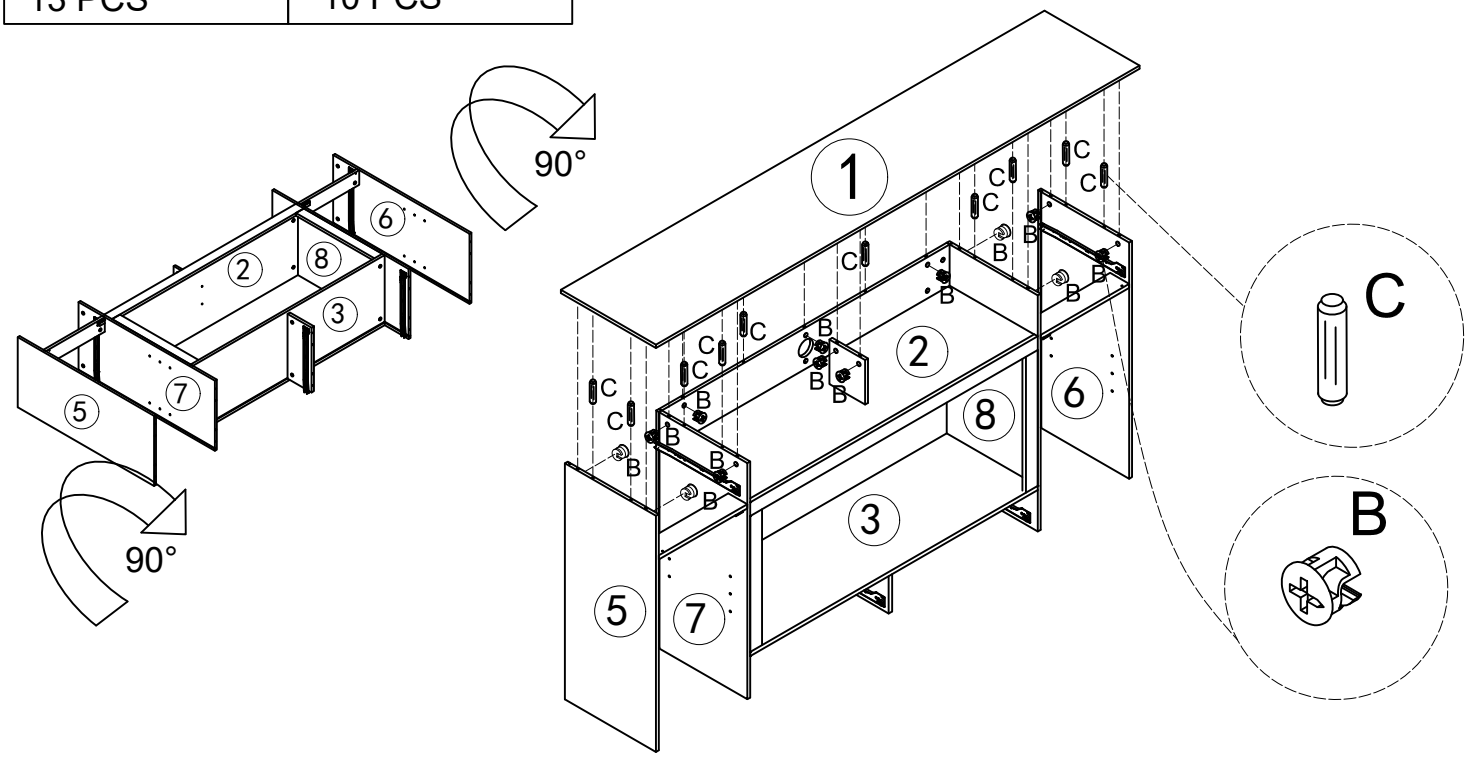

ASSEMBLY STEP

STEP:22

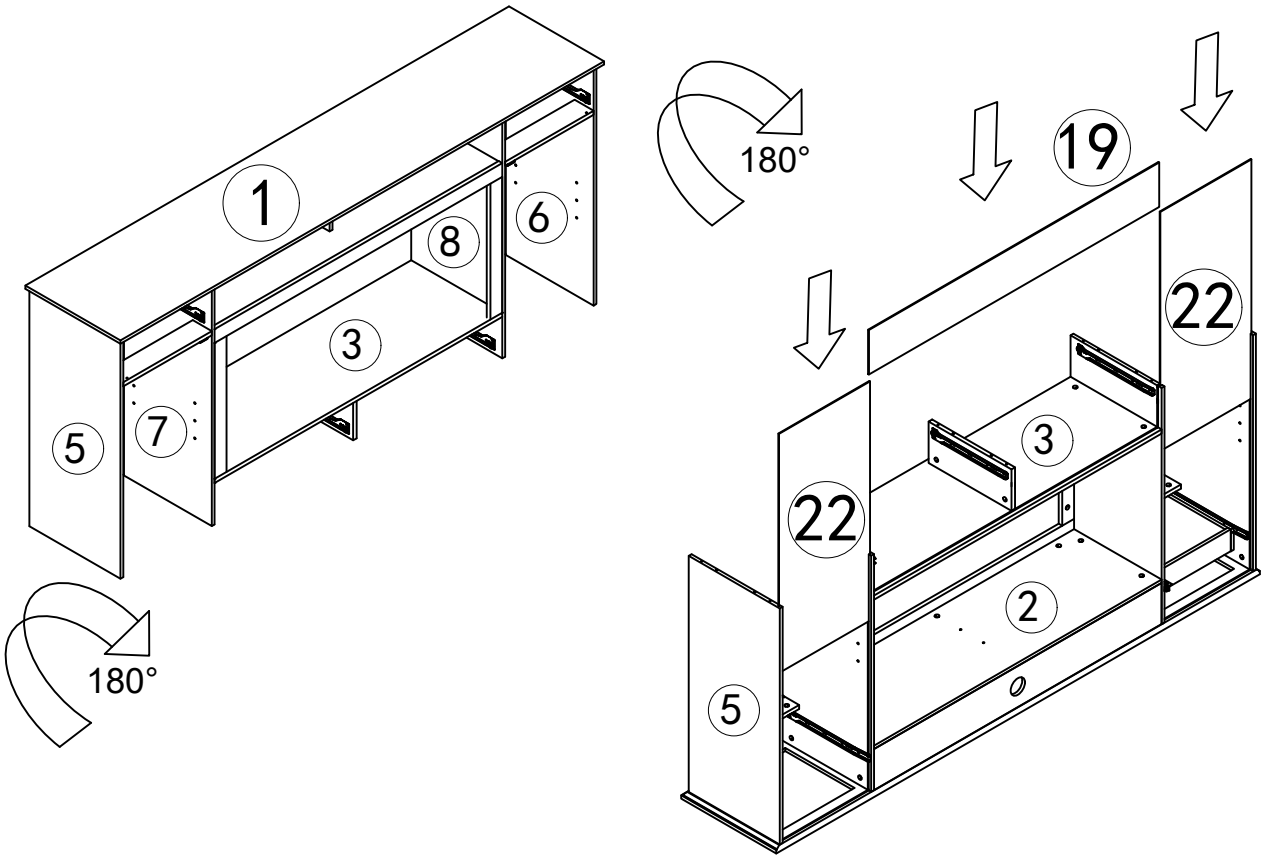

STEP:23

D	C
10 PCS	10 PCS

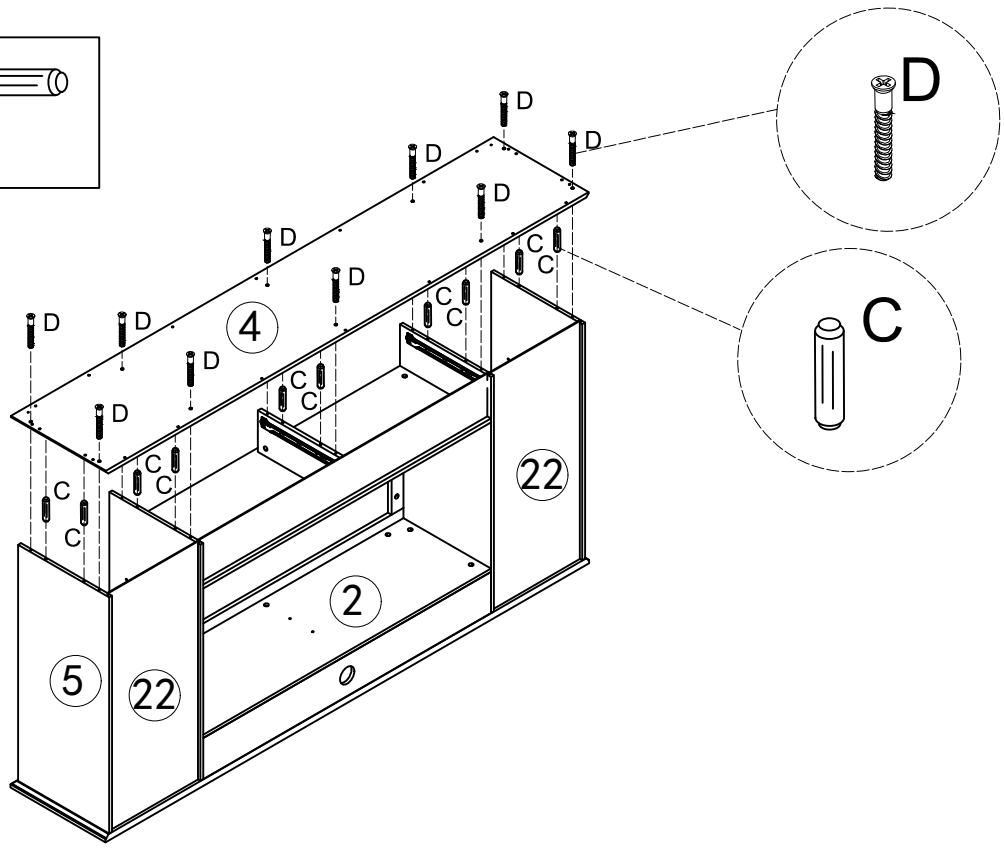

ASSEMBLY STEP

STEP:24

A

12 PCS

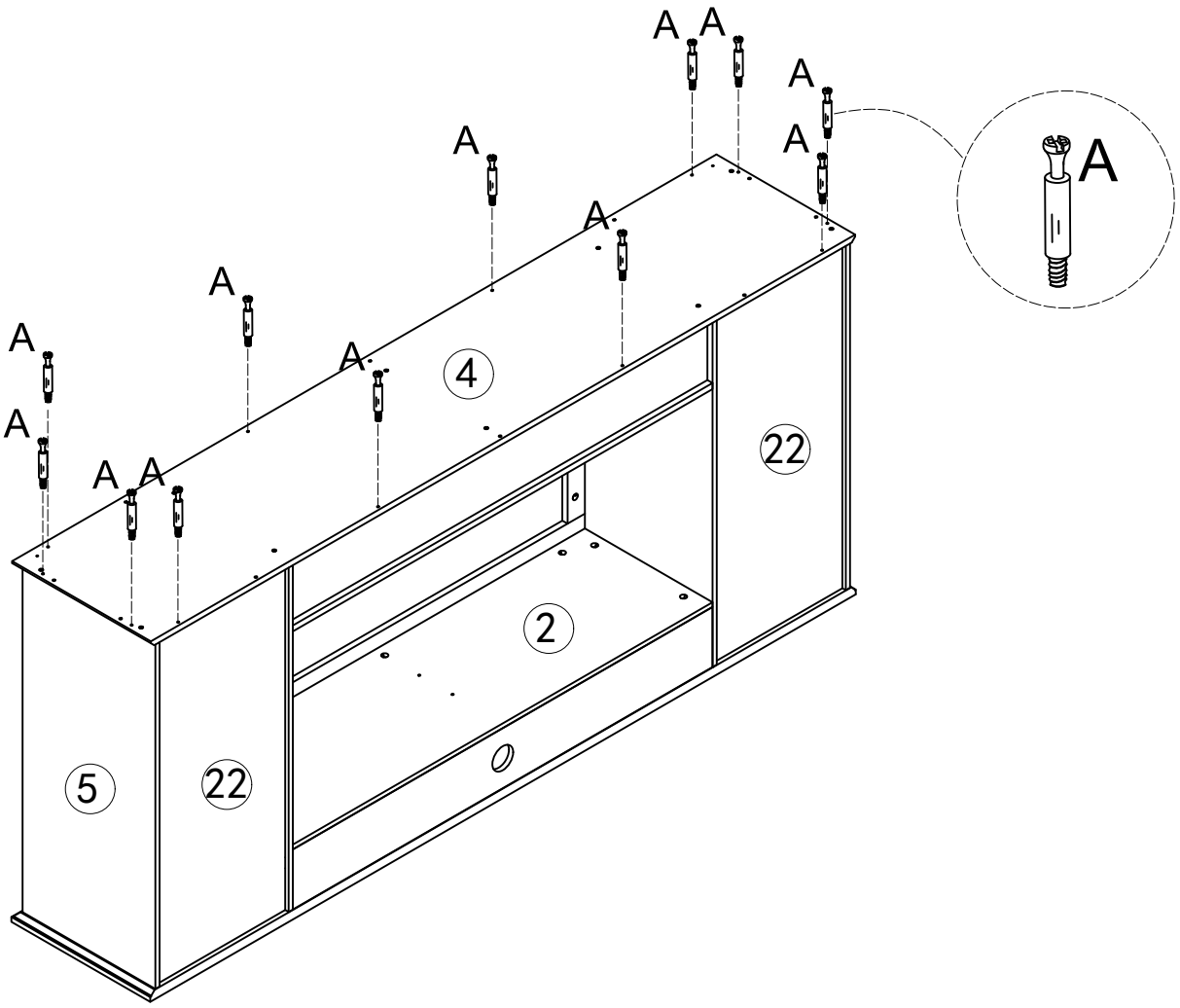

ASSEMBLY STEP

STEP:25

B	C
12 PCS	10 PCS

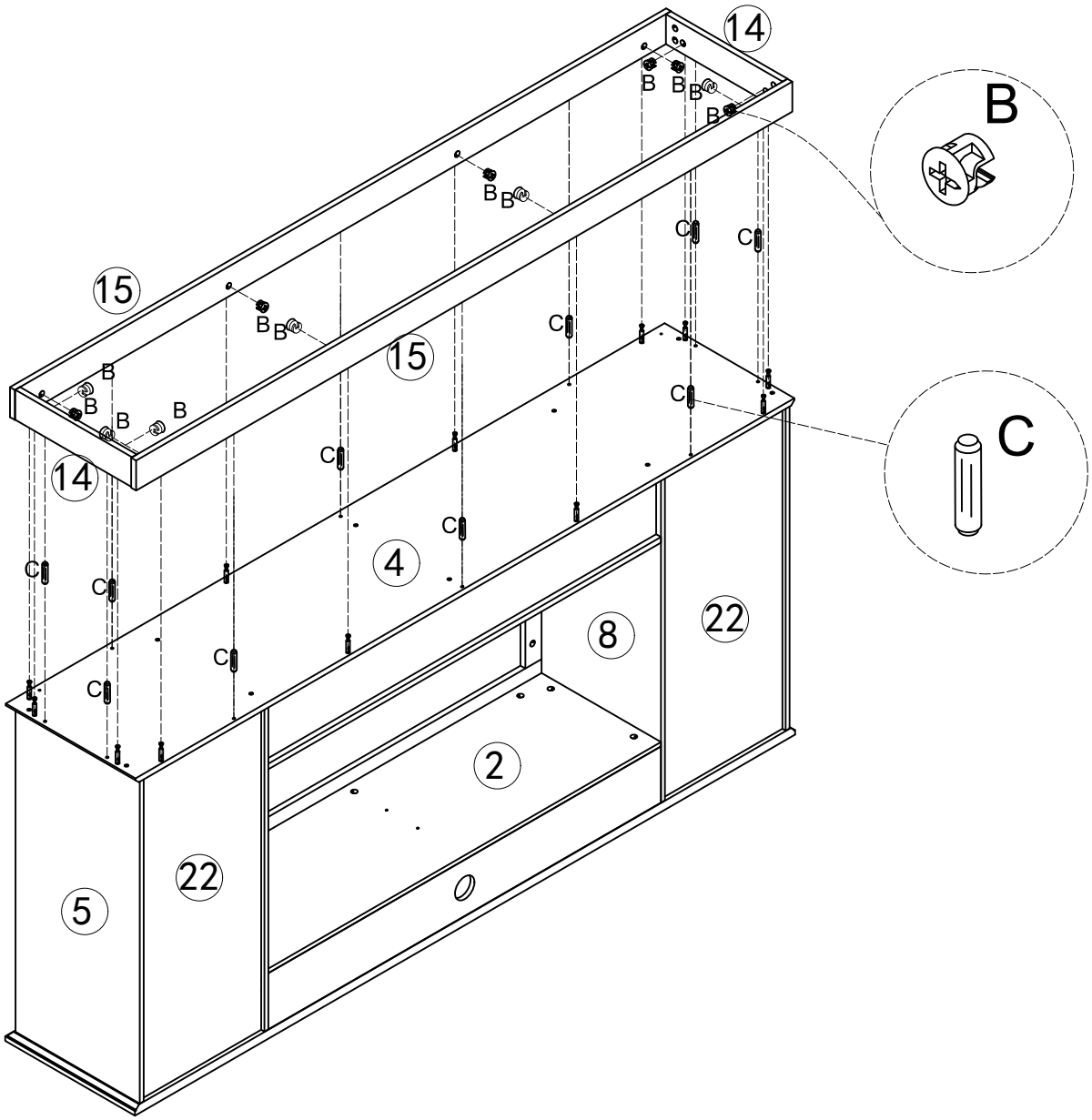

ASSEMBLY STEP

STEP:26

L

8 PCS

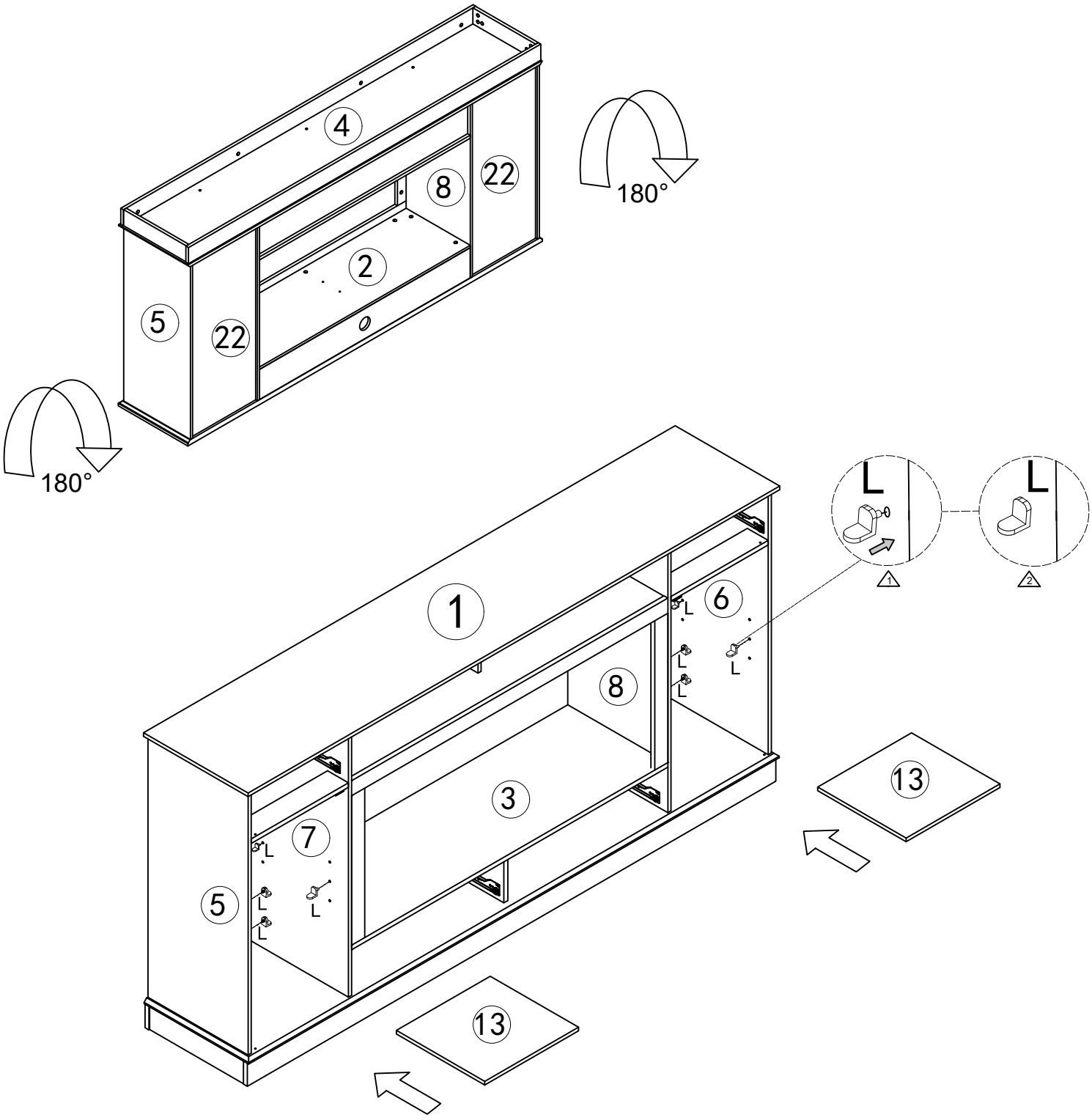

ASSEMBLY STEP

STEP:27

I	G	P	R	S
2 PCS	4 PCS	2 PCS	4 PCS	2 PCS

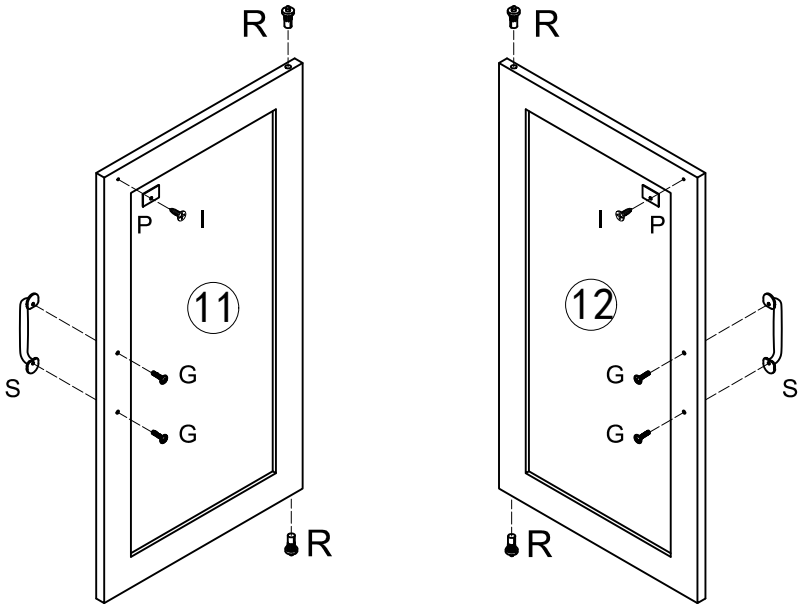

STEP:28

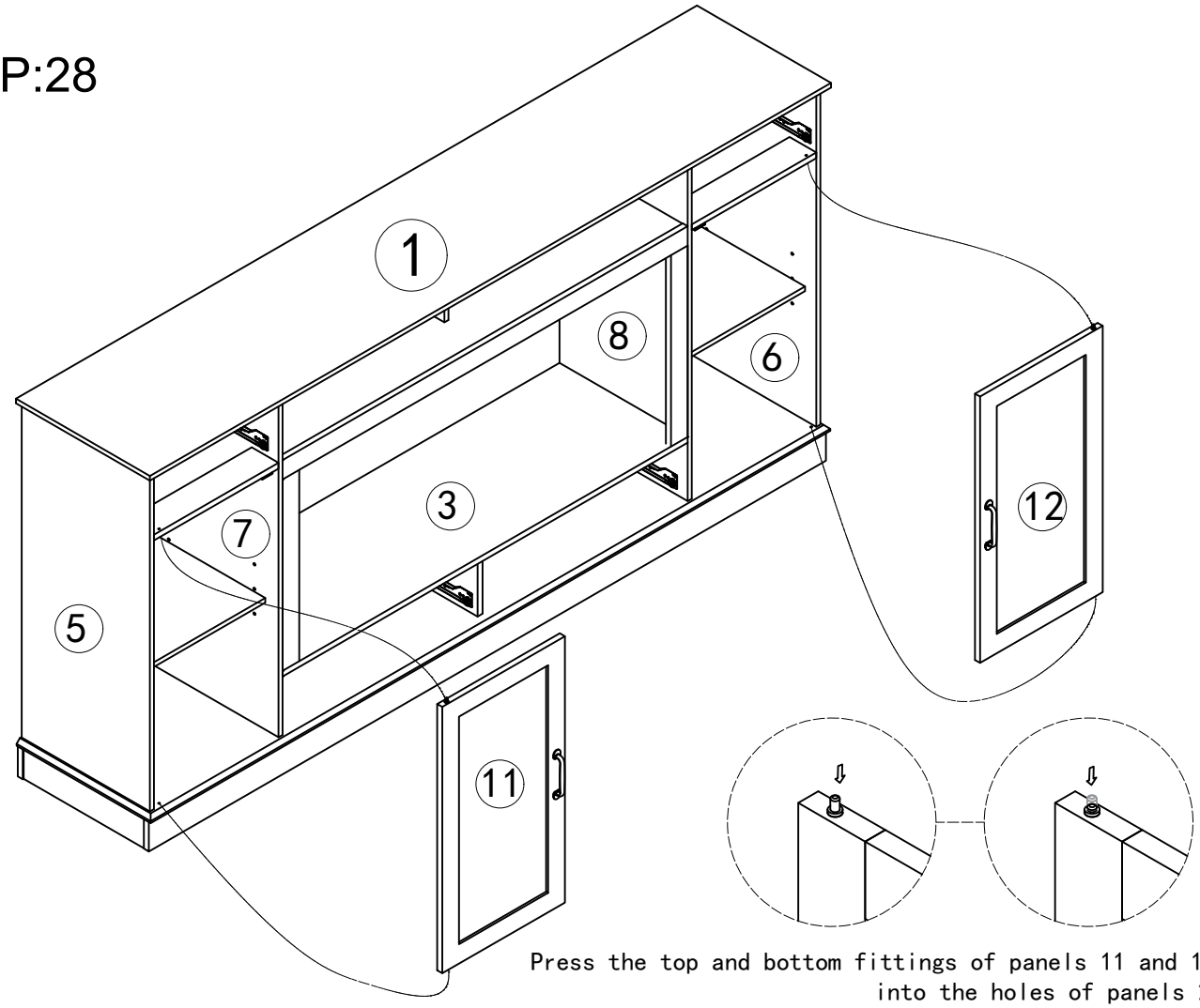

Press the top and bottom fittings of panels 11 and 12 fully into the holes of panels 2 and 3.

ASSEMBLY STEP

STEP:29

A

8 PCS

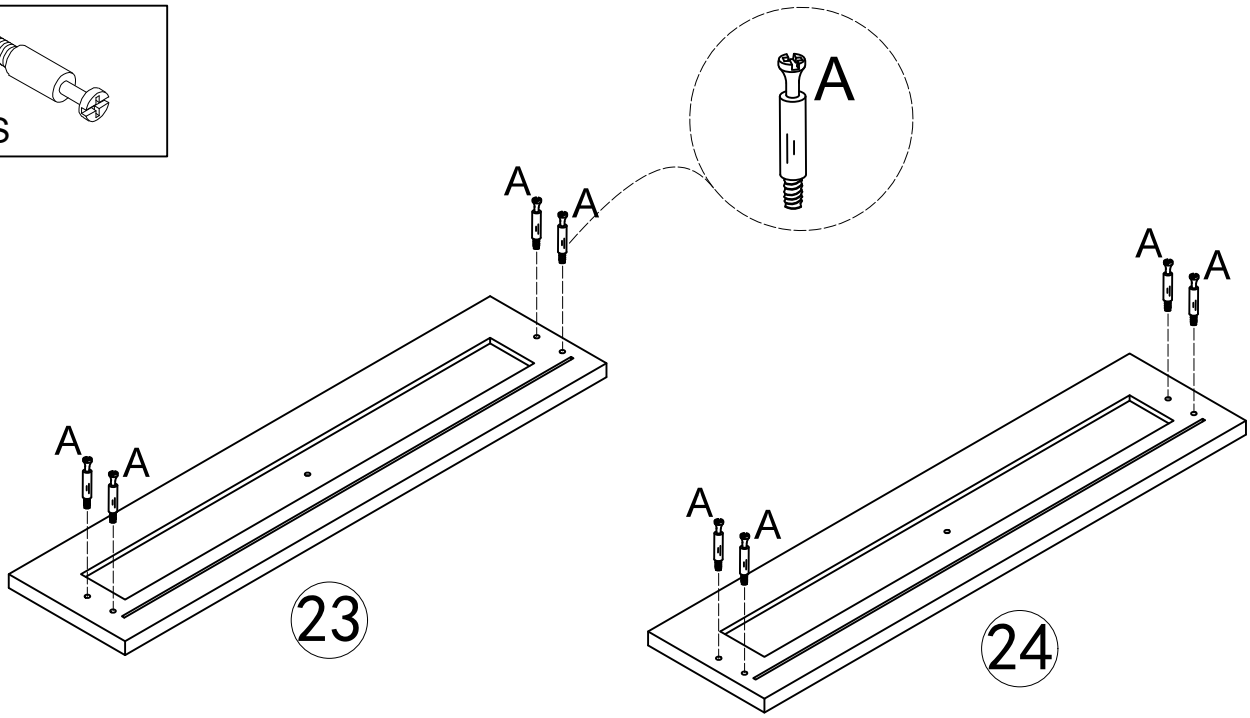

STEP:30

B

8 PCS

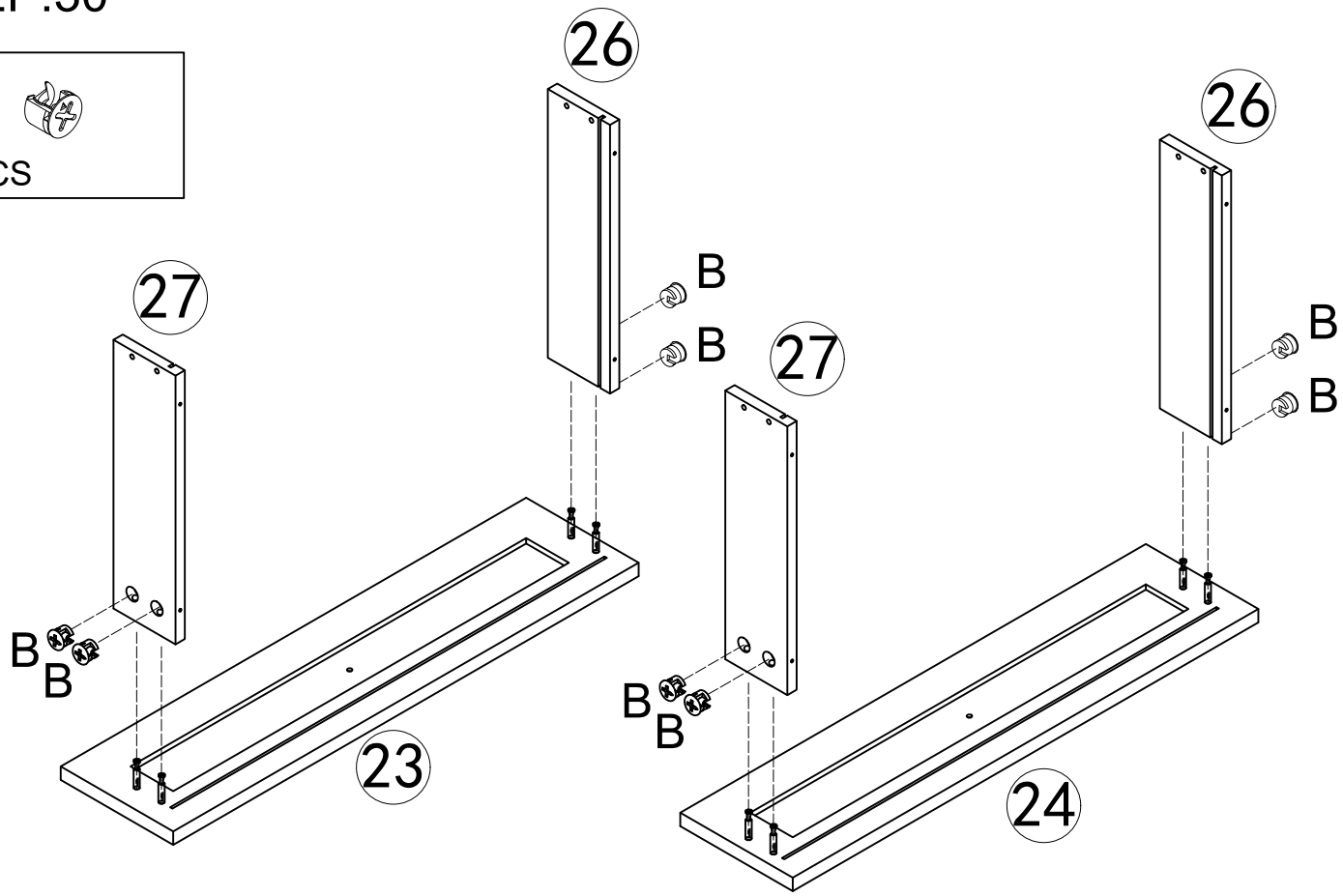

ASSEMBLY STEP

STEP:31

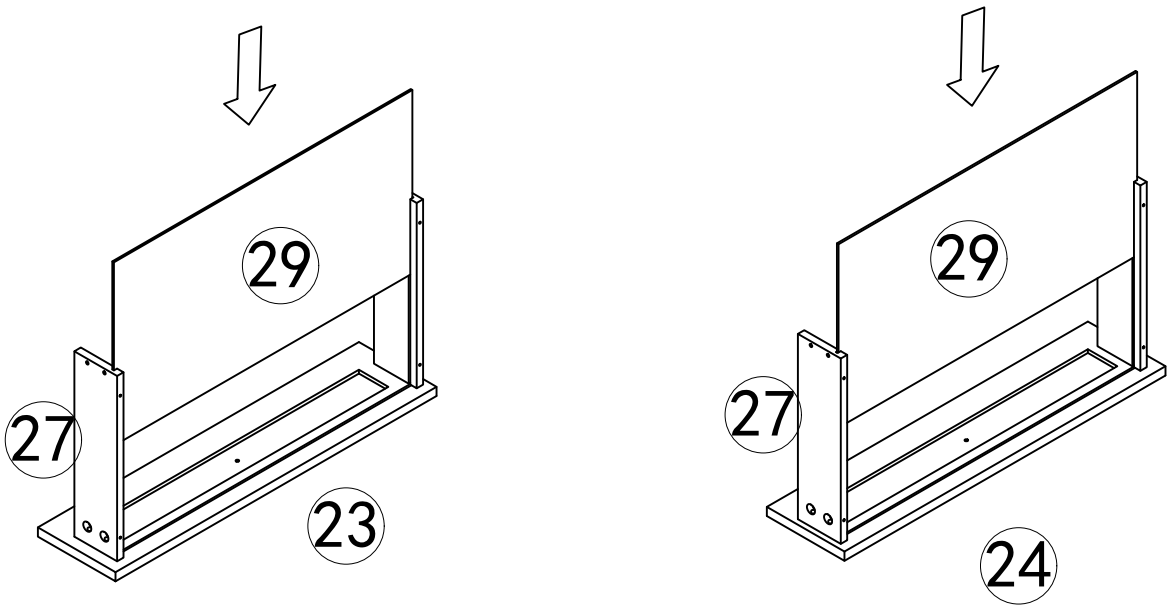

STEP:32

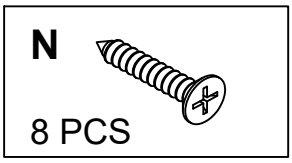

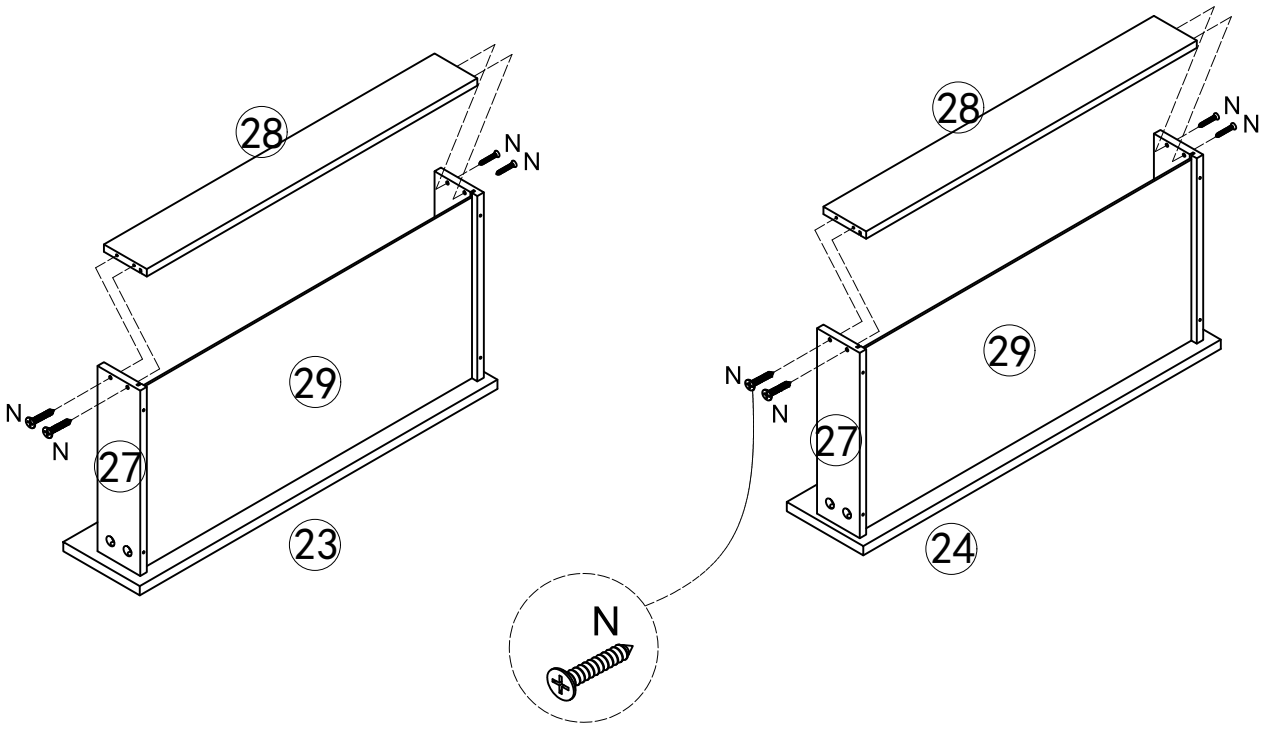

ASSEMBLY STEP

STEP:33

G	H
2 PCS	2 PCS

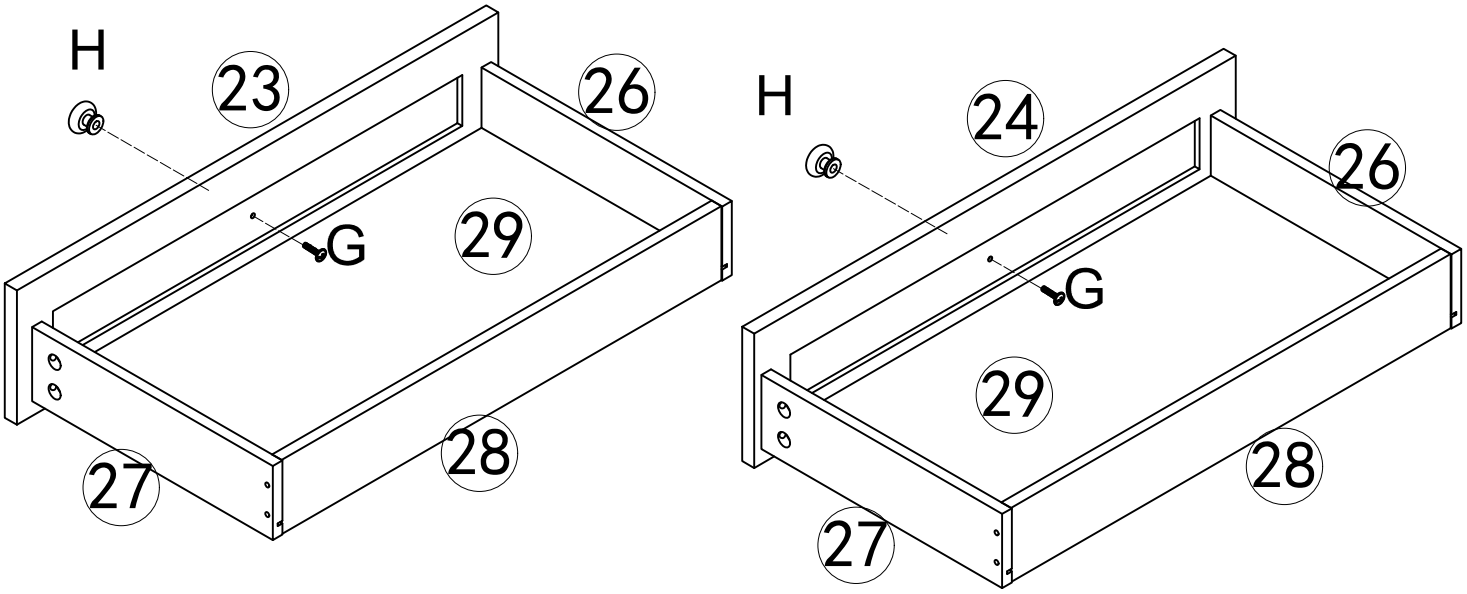

STEP:34

I	J	K
12 PCS	2 PCS 12"	2 PCS 12"

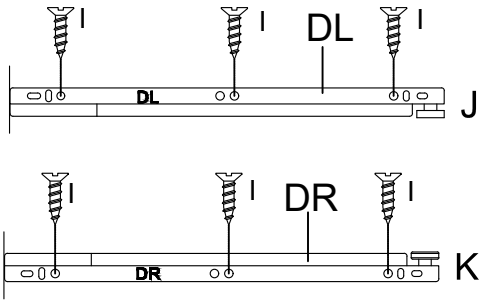

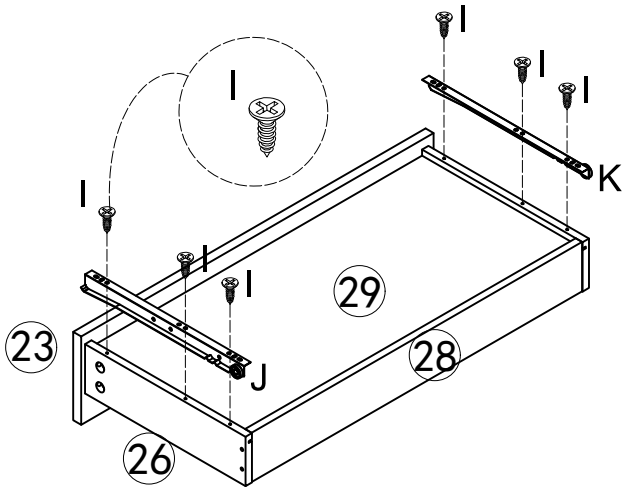

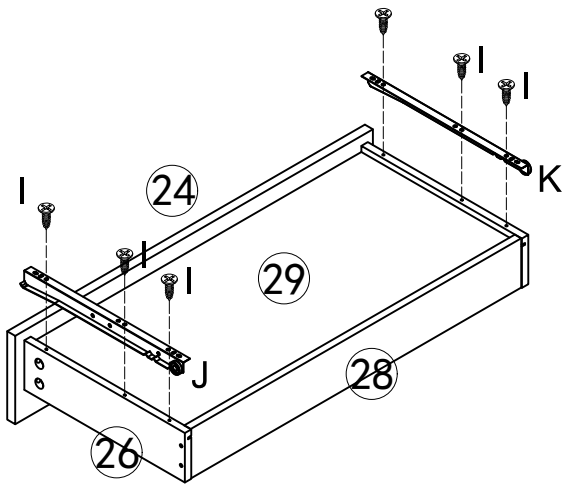

ASSEMBLY STEP

STEP:35

A

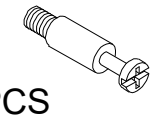

8 PCS

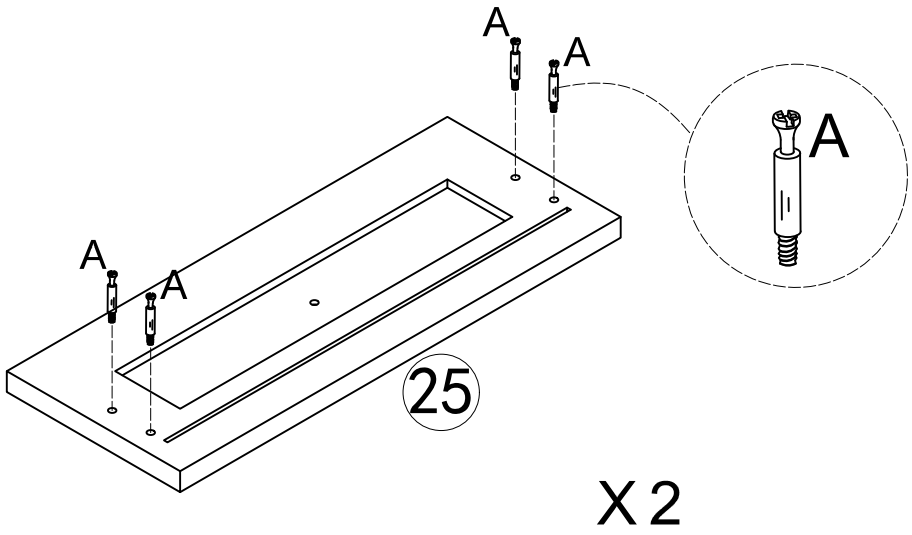

X 2

STEP:36

B



8 PCS

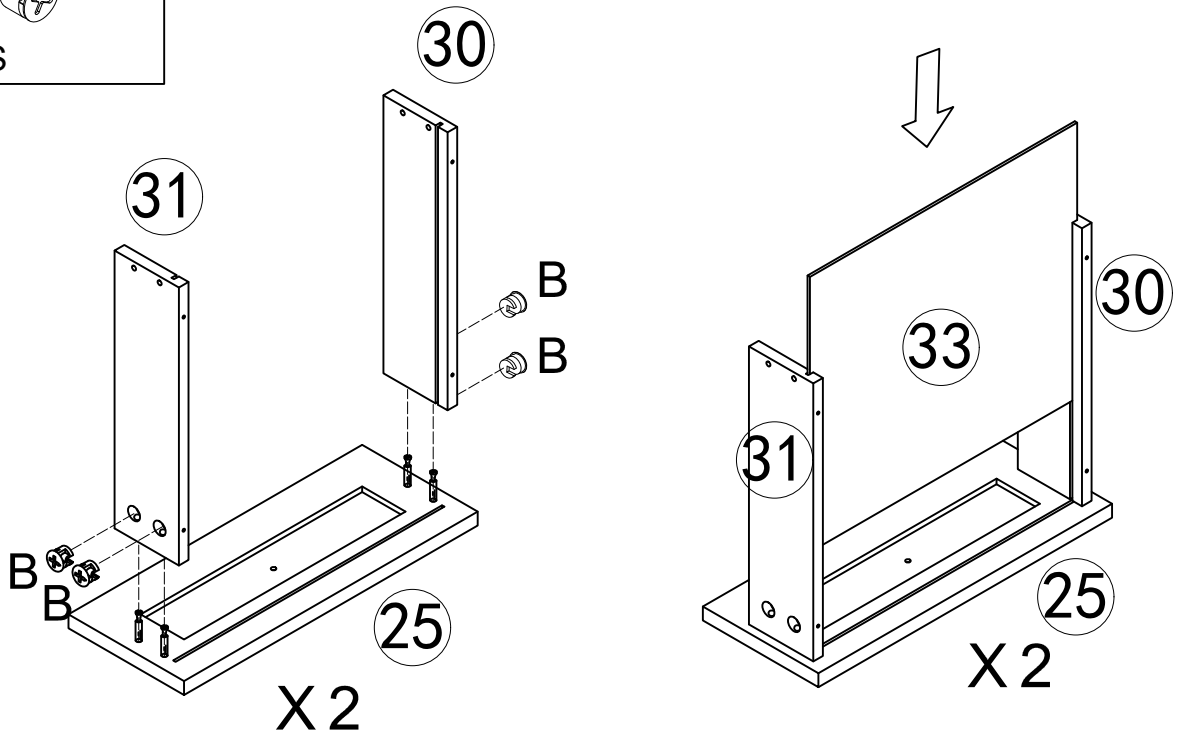

ASSEMBLY STEP

STEP:37

N	
8 PCS	

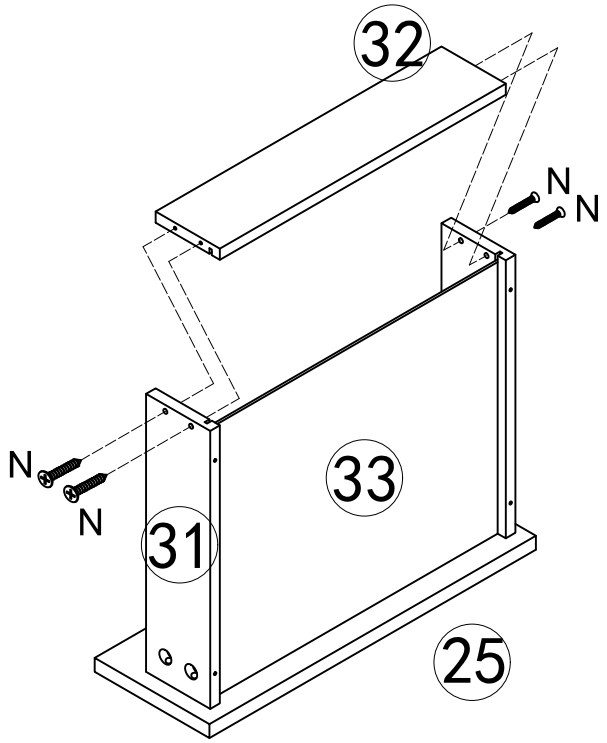

X 2

STEP:38

G	H
2 PCS	2 PCS

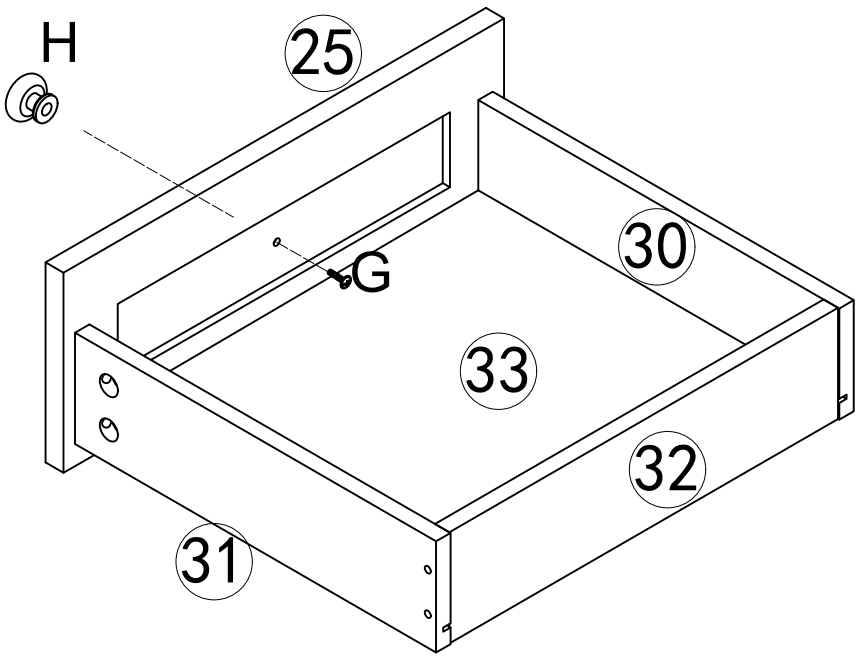

X 2

ASSEMBLY STEP

STEP:39

I	J	K
12 PCS	2 PCS 12"	2 PCS 12"

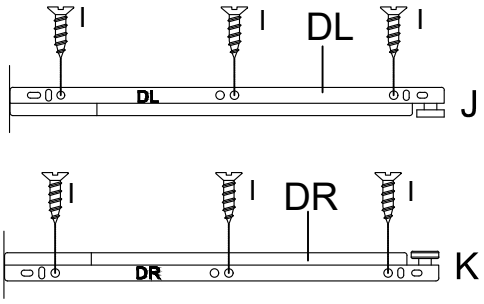

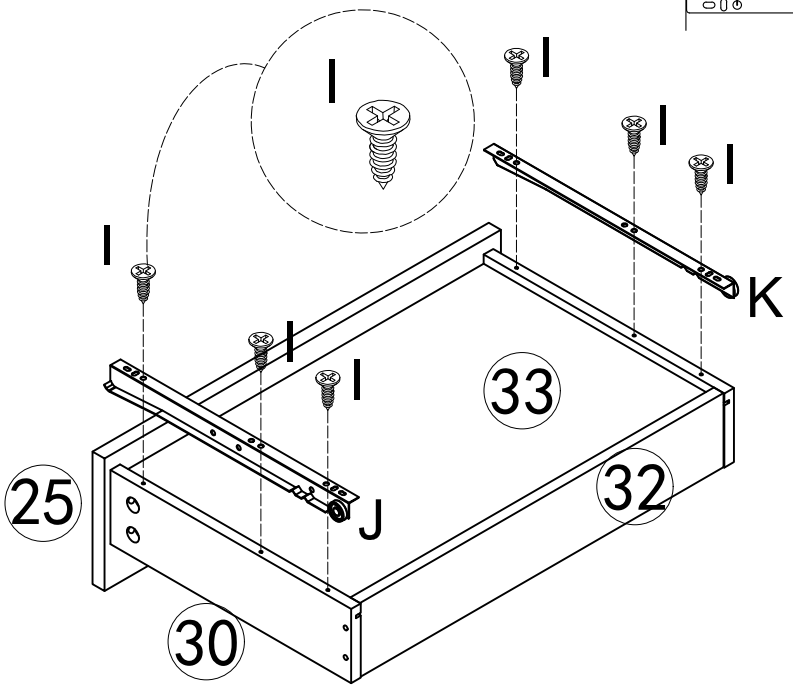

X 2

STEP:40

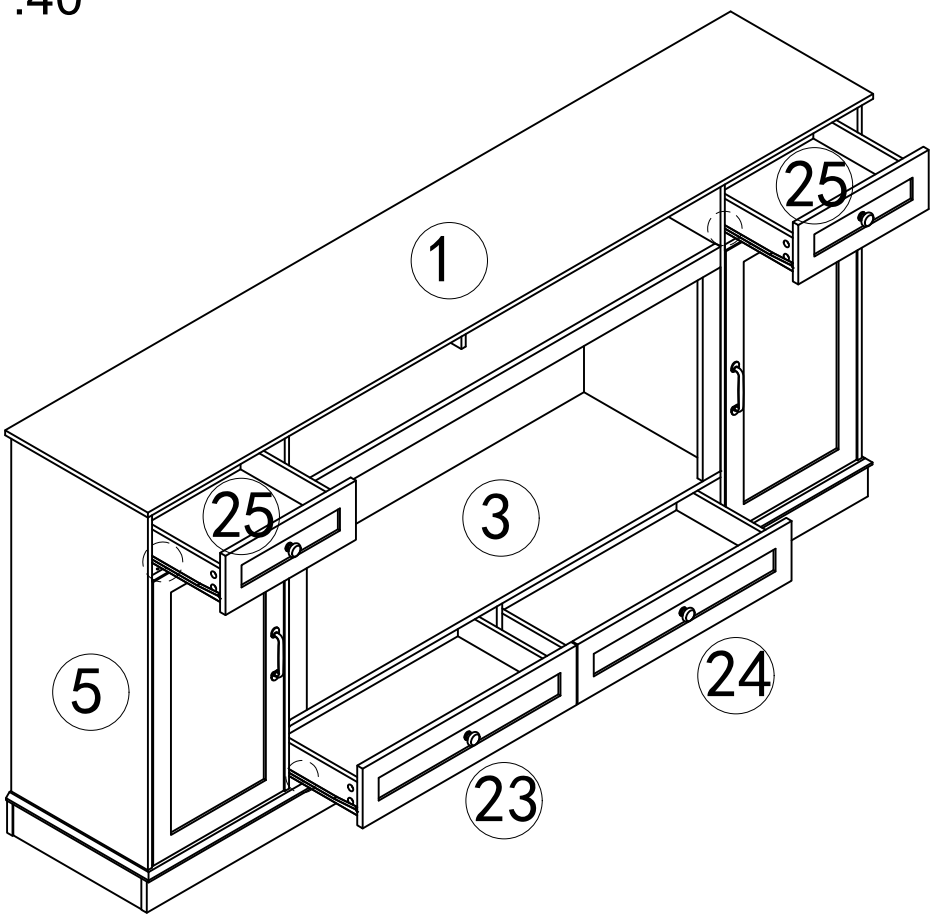

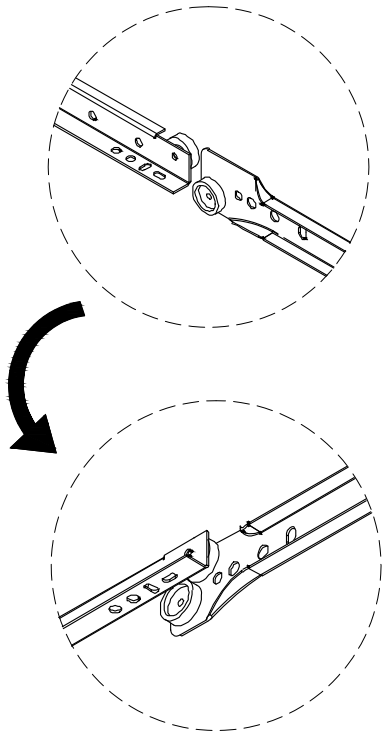

ASSEMBLY STEP

STEP:41

E	F
14 PCS	14 PCS

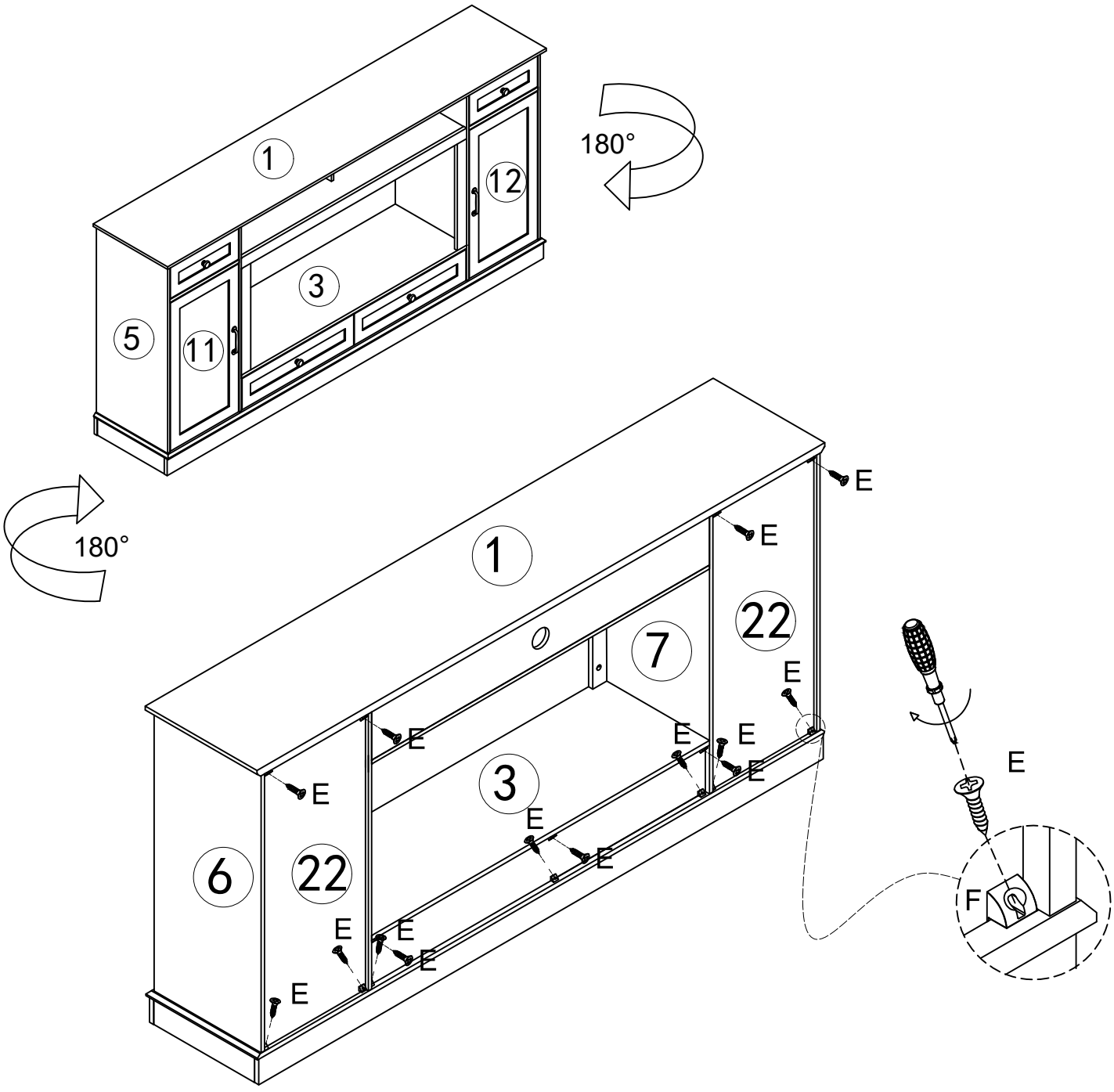

ASSEMBLY STEP

STEP:42

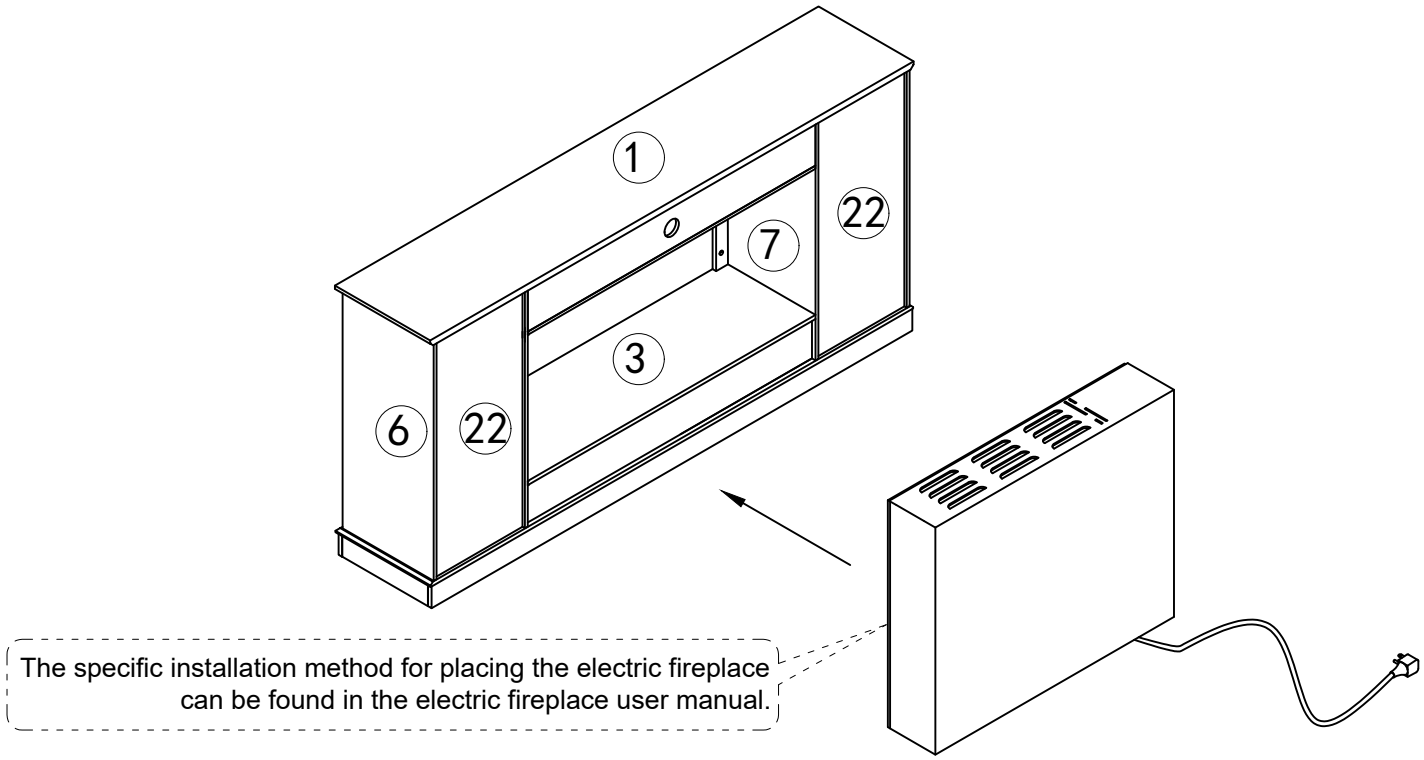

STEP:43

E  4 PCS	**O**  2 PCS

ASSEMBLY STEP

STEP:44

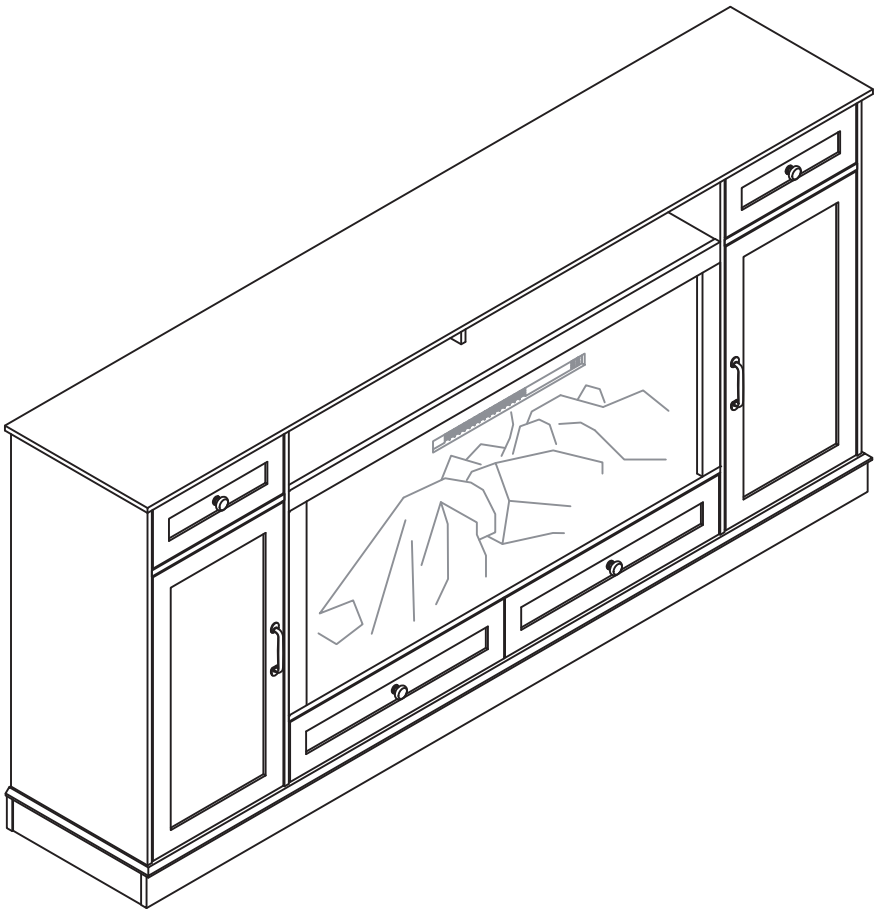

●FUNCTION

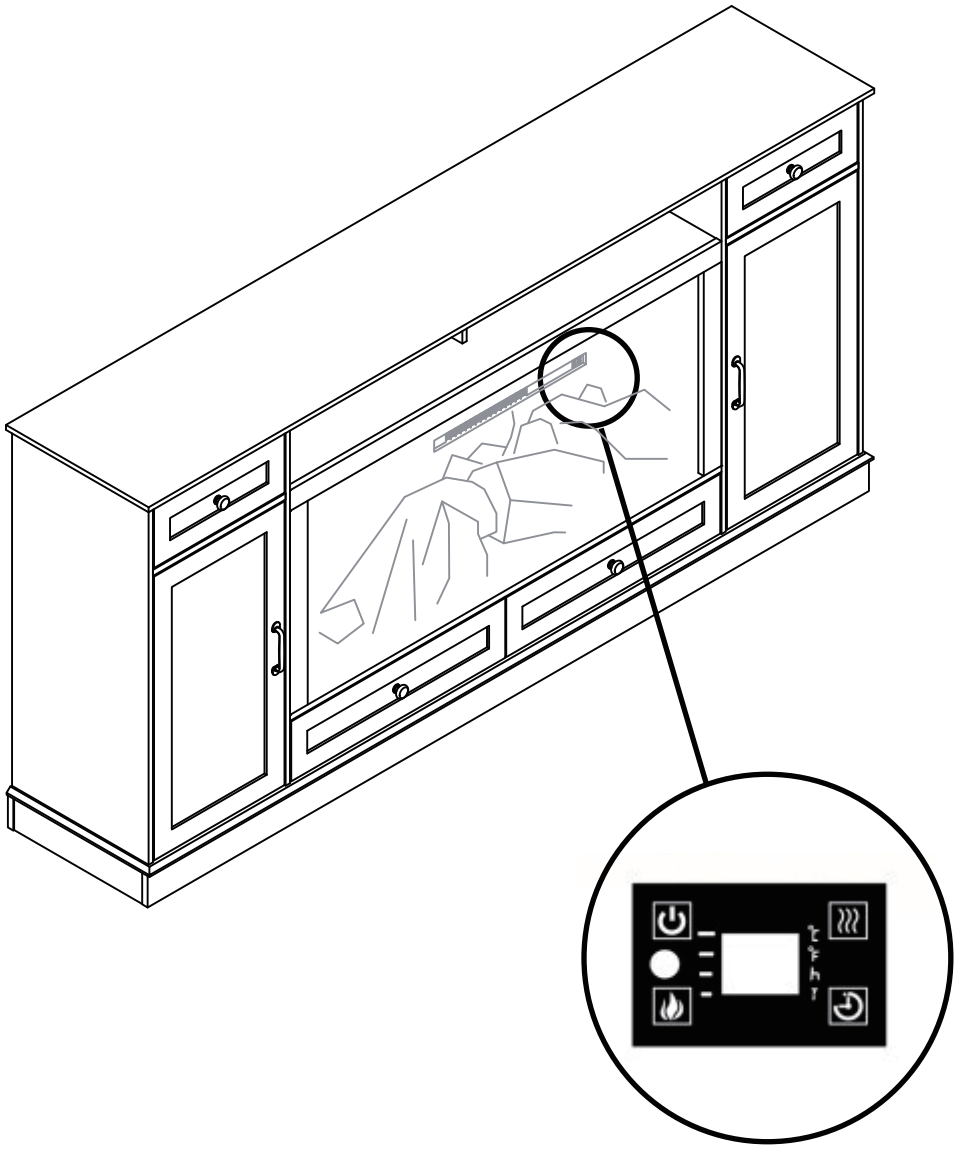

Seven-level adjustable flame color
Three-level adjustable flame brightness

Two-speed temperature adjustment (1500w/750w)
The heating system can be turned on and off independently

Can be set to 1-9 hours

Built-in Bluetooth sound system

Note: First, power on the furnace, and then connect to the furnace's Bluetooth "BT5.0" with other devices(phone and PC,etc).

THE TECHNICAL PARAMETERS

Function	Voltage(M)	Frequency(Hz)	Power (W)	Noise(dB)	Energy efficlency grade
Decorative furnace core	110V	50-60Hz	12W-36W	≤20dB	Three
Heating furnace core	110V	50-60Hz	750W-1500W	≤25dB	Three

Note: decorative furnace core is in non heating mode, applicable to the first row of data.

According to the Keypad/remote control instructions

Press the key pad instructions (decorating furnace core/heater core)

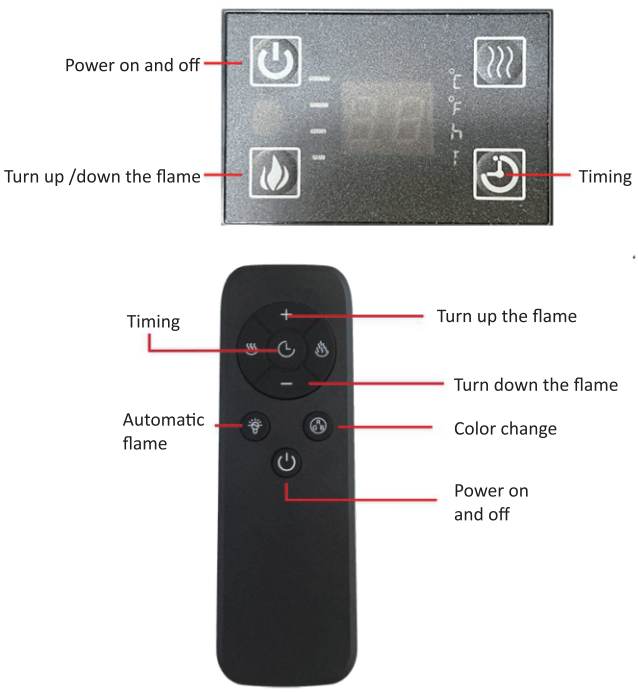

Decorative furnace core



Heating furnace core

Maintenance

1:Before the product is cleaned the power must be cut off.
2:Prohibition of direct water washing the fuselage.
3:Do not use any abrasive tools or solvents that can damage the surface.
4:Prohibited to open the product for transformation the proposed regular inspection of the product and clean with a dry cloth to extend its service life.

Troubleshooting

1:After the power is inserted,the hose will emit a "drop"sound as a reference for power-on.
2:The flame light and then go out. Check the box is wet.Ventilated and driedand restart the power.
3:Heater suddenly does not work due to heating and time is too long. Turn off the power it 20 minutes after the restart.
Note: Due the product hardware software upgrades from time to time.Such as instructions and products differ.Please prevail to the exising product if the aboveself test method can not solve or have any other questions please contact our after-sales personnel.We will give you a satisfactory reply.