Model

AGV-CL006

AGV Lighting™

INSTRUCTION MANUAL

IMPORTANT: READ CAREFULLY AND KEEP.

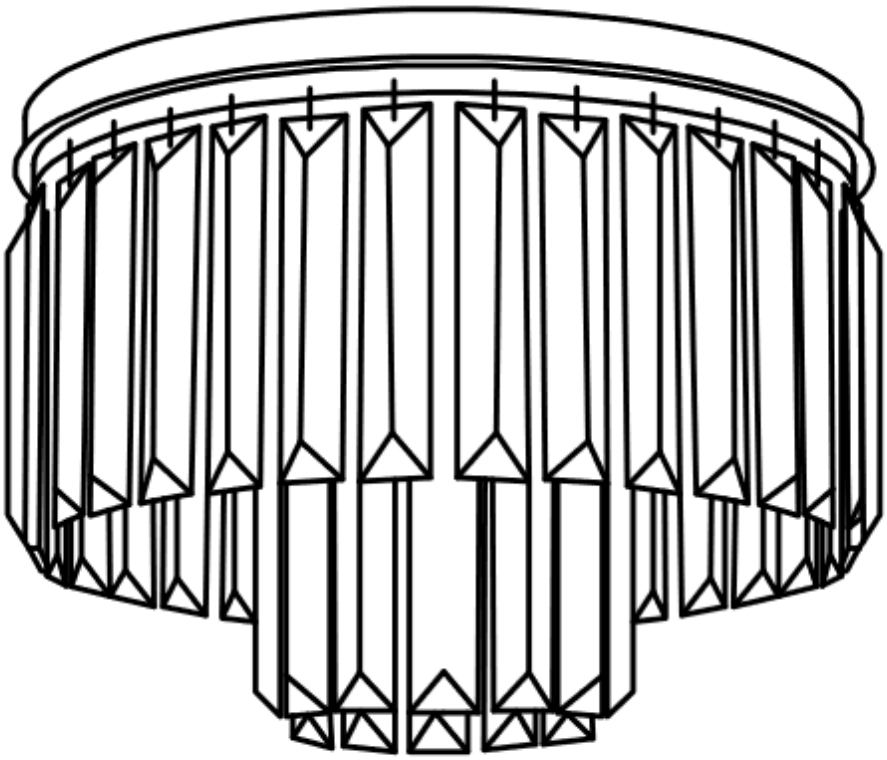

Customer service:

Service@agv-lighting.com

Made in China

Residential use only

Indoor use only

Parts List

Item	Drawing	Description	Quantity
A	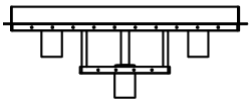	Fixture Lamp Base	× 1
B		Mounting Bracket	×1
C		Wire Connector	× 3
D		Screw 1 (for connecting juction box)	× 4
E		Screw 2 (for connecting Mounting Bracket)	× 2
F	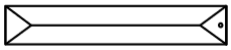	Crystal Sticks	× 44

TOOLS REQUIRED



Safety goggles



Phillips screwdriver



Flathead screwdriver

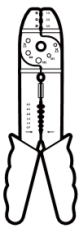

Wire strippers



Wire cutters



Ladder

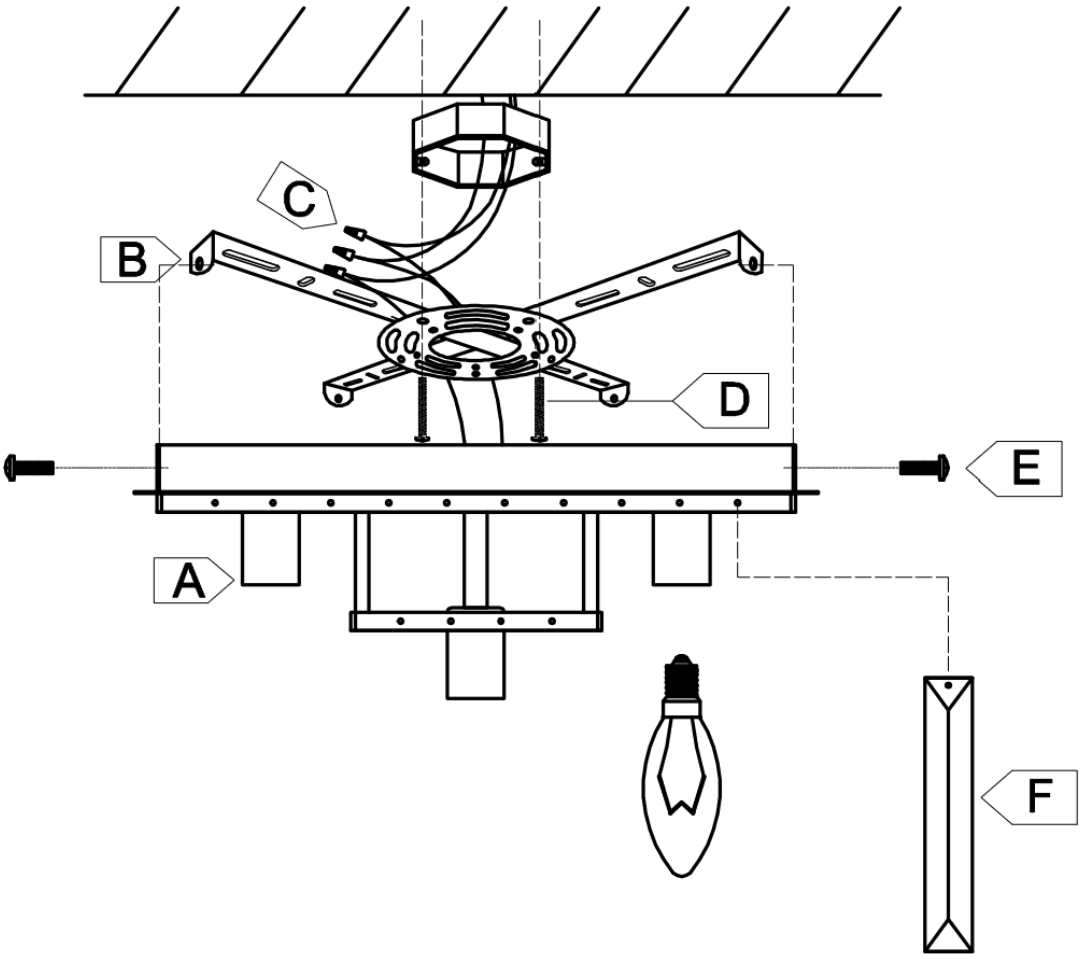
C
B
D
E
A
F

IMPORTANT

This warranty applies only to the original consumer purchaser and only to products used in normal use and service. If this product is found to be defective, the manufacturer's only obligation, and your exclusive remedy, is the repair or replacement of the product at the manufacturer's discretion, provided that the product has not been damaged through misuse, abuse, accident, modifications, alterations, neglect, or mishandling.

This warranty shall not apply to any product that is found to have been improperly installed, set-up, or used in any way not in accordance with the instructions supplied with the product.

This warranty shall not apply to a failure of the product as a result of an accident, misuse, abuse, negligence, alteration, faulty installation, or any other failure not relating to faulty material or workmanship.

The manufacturer does not warrant and specifically disclaims any warranty, whether express or implied, of fitness for a particular purpose, other than the warranty contained herein. The manufacturer specifically disclaims any liability and shall not be liable for any consequential or incidental loss or damage, including but not limited to any labor / expense costs involved in the replacement or repair of said product.

Switch off the main electrical supply from the fuse box/circuit breaker before installing the unit or doing any maintenance.

Do not use outdoor.

WARNING:



Risk of electrical shock.

Turn off breaker at the panel.

INSTALLATION

WARNING: First of all, turn off the power at the main fuse box!

1. Disassemble the mounting bracket from the canopy, and then fix the Mounting Bracket on ceiling junction box with Screw 1, but do not screw tightly before step2 (left some room for 7th wire connection).
2. Connect wires with wire connectors as below pic, and then screw the Mounting Bracket on the ceiling junction box tightly.

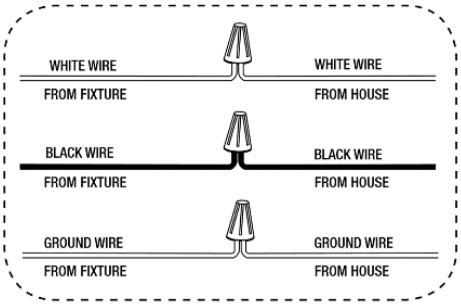

3. Fix Canopy on the Mounting Bracket with Screws 2.
4. Hang crystal sticks on the lamp base as below pic showed.
5. Install 3pcs of E12 base bulds on the lamp base, bulbs not includ in pack.

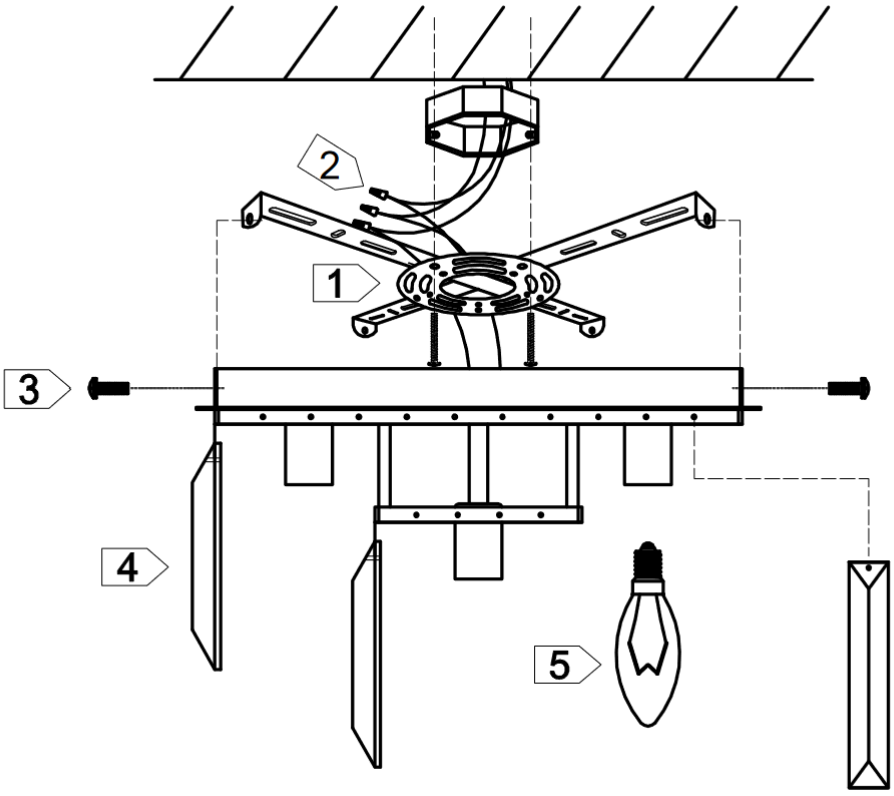

SERVICE

Contact customer service for questions, problems or missing parts.

Customer Service Email:

Service@agv-lighting.com

You can also access the **Buyer-Seller Messaging Service** for your convenience. Log into your Amazon.com account and go to Message center. You can send message to our customer service and view past communications. Send attachments to us, file types supported include plaint text (.txt), PDF, images (.jpg, .gif and .png), and word documents.

For eligible return orders, go to **Your Orders** on AMAZON buyer central. Choose the order and select **Returen** or **Replace** Items. Select to issue a refund or replacement. The return policy for return orders follows the AMAZON customer service policy.