VEVOR

Upgrade · The Home Creator Way

Tumbling Composter

MODEL: XDB-436B1

VEVOR Support Center

XDB-436B1

VEVOR
Upgrade·The Home Creator Way

Tumbling Composter

MODEL:XDB-436B1

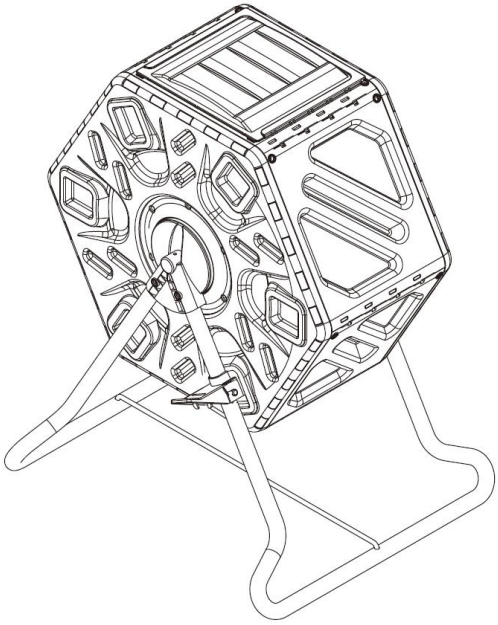

<Picture Only For Reference >

This is the original instruction, please read all manual instructions carefully before operating. VEVOR reserves a clear interpretation of our user manual. The appearance of the product shall be subject to the product you received. Please forgive us that we won't inform you again if there are any technology or software updates on our product.

IMPORTANT SAFEGUARDS



WARNING: Read and understand this entire manual before operating or servicing this product. Failure to follow these warnings and instructions can cause personal injury or damage to valuable property.

- The product complies with relevant standards and regulations.Installation of this device must comply with all applicable regulations, and it should only be operated in well-ventilated areas. Please read the user manual before installing and using this equipment.
- This appliance is not intended for use by persons (including children) with reduced physical, sensory or mental capabilities, or lack of experience and knowledge, unless they have been given supervision or instruction concerning use of the appliance by a person responsible for their safety.
- Children shall not play with the appliance.
- Please properly keep product. Check whether the product is abnormal before use. If it is abnormal, please stop using it.
- Please use the product according to the intended use, warn of potential injury from misuse.
- Not suitable for environments with high humidity, explosive atmospheres, salt spray, acidic or alkaline conditions.

Installation precautions

1. Installation only according to these instructions. Improper installation can create hazards.
2. Keep the installation area clean and well-lit.
3. Keep bystanders out of the area during assembly.
4. Do not install when tired or when under the influence of alcohol, drugs, or medication.
5. Product capabilities apply to properly and completely installed products only.
6. For additional information regarding the parts listed in the following pages, please refer to the accessories package of this manual. Unwrap and separate all parts in a clean work area. Please keep small spare parts out of children's reach.
7. Do not use it near the fire. Use it after it is fully assembled.

8. Do not use excessive force when assembling or storing the product.
9. This product MUST be installed/serviced by a qualified service technician.

SAVE THESE INSTRUCTIONS

Thank you very much for choosing our product. Please read all the instructions before using it. The information will help you achieve the best possible results.

INTRODUCTION

- This product is used to turn your food waste into garden gold. It transforms kitchen and garden waste into rich, fertile compost. Ready-to-use compost will be yours in just 4-6 weeks; it's unique aeration system. Internal mixing bars speed up decomposition to make growing a happy garden easier than ever!
- Reduce your carbon footprint – Studies show that approximately one-third of the world's food supply goes to waste. But with VEVOR's rolling compost box, you can do your part to change that. Help the environment, and cook up some compost that your plants will love.
- Year-round, hassle-free – Why should composting be a seasonal activity? VEVOR's heavy-duty design lets you keep your compost going all year round! The sturdy side-locking mechanism ensures easy loading and unloading, while the durable construction maintains a tight seal.

SPECIFICATIONS

Model	XDB-436B1
Capacity	70L/18.5Gal
L	605
W	510
H	730

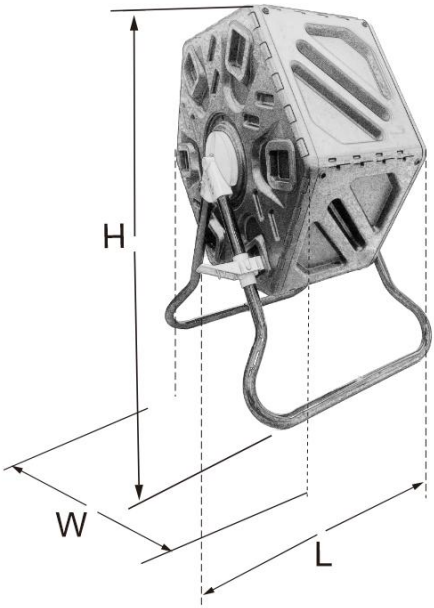

Accessories package

No	Components	Picture	Q'TY
1	**A**		5
2	**B&C**	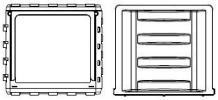 Part B&C come pre-installed	1
3	**D**		2
4	**E**		2
5	**F**		1
6	**G**		1

7	H		8
8	I	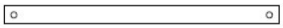	1
9	J		2
10	K		1

Installation

One person may install it with brief help from additional personnel. Use these instructions to ensure the correct installation function. And operation of product VEVOR Corporation reserves the right to modify appearances and specifications without notice.

Step 1: Match A and B and slide into the right position. **Note that the male and female clasp on the edge of the A&B should be aligned before sliding up and down so that they can be fastened properly.**	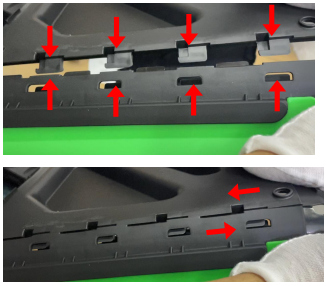
Step 2: The same operation method is used to combine the remaining 4 pieces of A in turn, and the last piece of A and B are connected to form a closed loop. **Also, note that the male and female clasp on the edge of the A&B should be aligned before sliding up and down so that they can be fastened properly.**	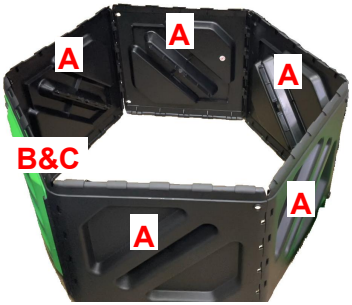

Step 3: Install both sides of the panels to form a chamber.

Caution:

1. When installing, pay attention to the alignment of the buckle and the slot. You can tap the buckle with your fist or hammer to tighten the buckle. A "click" sound is usually heard, indicating that the buckle is installed in place. If there is an obvious gap between panel D and side panel A or B on the side, the buckle is not installed in place.

2. When the buckle is not installed in place, press panel D about 40mm from the edge with your thumb so that panel D is dented and deformed. At this time, you can hear a "click" sound, indicating that the buckle is installed in place.

3. Check whether there is a significant gap or warped edge between D and A&B, and ensure that the panel is installed in place. Install the other panel D in the same way. So, we've completed the assembly of the cavity.

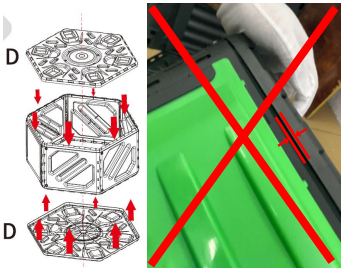

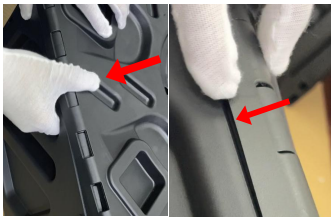



Step 4: Install the side support end cover E and support rod I, and tighten screw H with a screwdriver.

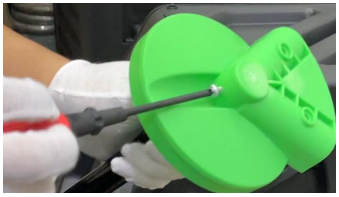

Step 5: The installed side support end cover E and support rod I pass through the center of the cavity.	
Step 6: Install support end cover E on the other side and tighten screw H using a screwdriver.	
Step 7: Insert the support base support J into the hole on the side support E, and tighten the screw H.	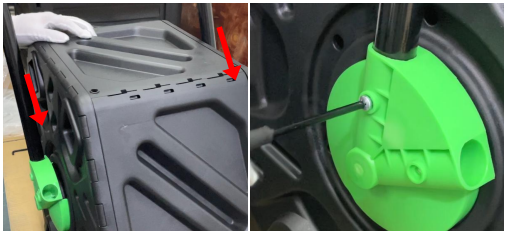
Step 8: Fasten mounting support F into support J of the support base. Align the arrow pointing down on support F with the screw hole, and install and tighten screw H.	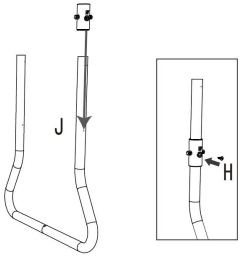

Step 9: Install the lock G on the support F, noting that G will be slightly deformed before it can be stuck into the shaft pin of F, but there is no need to worry; this is normal.	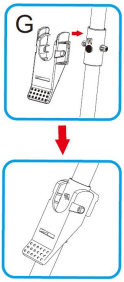
Step 10: Insert the support base support J into the hole on the side support E, and tighten the screw H.	
Step 11: Install reinforcing rod K at the bottom of support frame J.	
Step 12: Test whether the composter chamber can rotate smoothly.Test whether the compost chamber can rotate smoothly, and whether the lock G can clamp the buckle hole of the side panel D of the chamber to fix the chamber. **Caution:** If the latch G is in the locking position, the cavity cannot be forced to rotate at this time, which will cause the buckle G to be deformed and damaged. At this point, we have completed the installation of the composter.	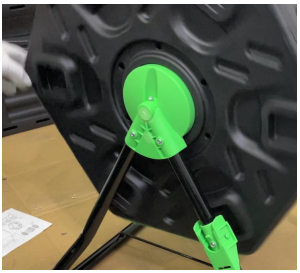 

How to compost

Here, we recommend you how to compost.

1. Collect some of the waste generated in your daily life, such as apple peel, banana peel, vegetable leaves, egg shells, etc. Pour them into the composter.	
2. Add dead garden leaves, even scraps of paper; you don't need to care about the proportion of green organic matter, but the best effect is (25-30) 1. You can also add some bran, which is more effective for fermentation of the compost.	 
3. Add some clean water to the mixture to make it easier to ferment when they becomes moist, and rotate the composter to make them mix. Internal mixing bars aerate material while turning to help accelerate decomposition. When composting, place a basin under the compost machine to receive the liquid from the composter, which can be used to water the trees and flowers in your garden.	 

4. Ready-to-use compost will be yours in just 4-6 weeks. The compost is done when it's dark and crumbly with an earthy smell.	

Caution:

- Check that the compost is slightly damp, and add water when needed.
- Turn the compost 5-10 rotations at least 2-3 times a week.
- Aerating vents help promote fast composting with air flow as needed.
- Empty the compost into a bucket, wheelbarrow, or tarp.
- Use the compost in your garden.
- Do not compost with grass and leaves that have been sprayed with insecticide.

