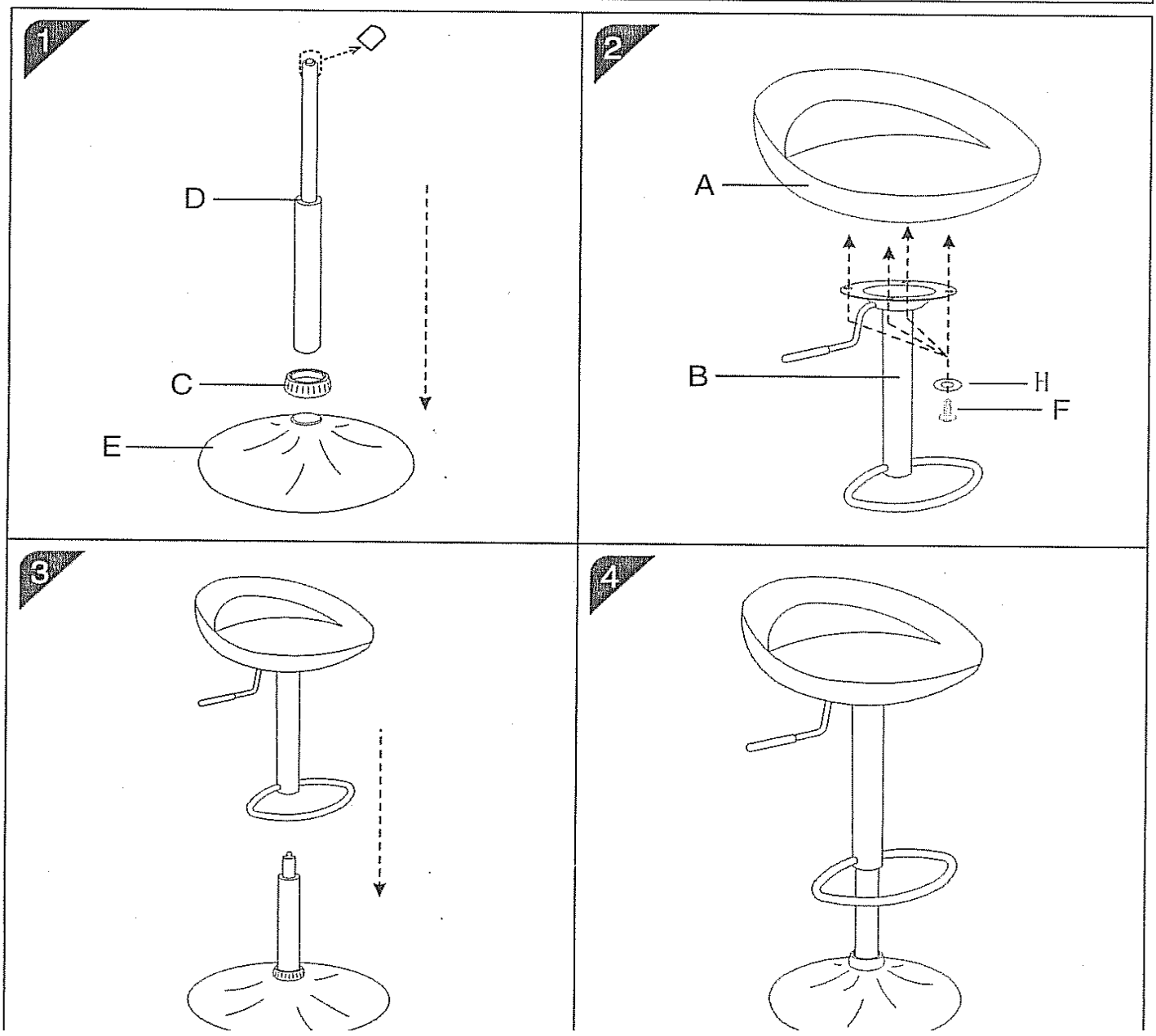PARTIDENTIFICATION	QUANTITYPERSET	PARTIDENTIFICATION	QUANTITYPERSET
A:	1	E:	1
B:	1	F:	4
C:	1	G:	1
D:	1	H:	4