DREAMS IDEA

Instruction Manual



DREAMS IDEA

NO.CH0075W

ABOUT US

DREAMSIDEA IS A ONE-STOP HOME

FURNISHING AND SERVICE COMPANY BASED IN USA.

WE ARE DEDICATED TO BRINGING YOUR DREAM HOME TO LIFE.

OUR SERVICES COVER FROM DESIGN, PRODUCTION,

DIRECT SELL, STORAGE, AND TRANSPORTATION.

IF REALITY IS THE NEAR SHORE

AND IDEALISM THE FAR SHORE,

DREAMSIDEA

AS THE FERRY BETWEEN THEM,

EAGER TO ACCOMPANY YOU ON A JOURNEY

TO YOUR IDEAL HOME.

ITEM NO.CH0075W

WARRANTY

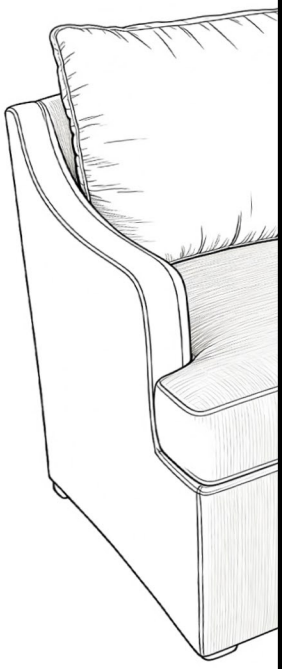

We strive to offer high quality product and we also try our best to satisfy each customer that order from us, no matter on products or services as needed. Each customer receives a record of their order, such as the order number or item receipt. For any items that are out of warranty period, you may still be able to purchase the replacement parts from our company if they are available.

Are you having difficulty
with assembly? Missing parts?
Please contact us : info@firstopintl.com
Tel:(562)-781-3327
send an email with your order No. to us
For return, please check the return policy with the retailer or platforms you bought from.
Appreciate your purchasing from us.
Pop up your life by our furniture !

MAINTENANCE AND WARNING

Please read the manual thoroughly before you start installing.

Please keep the product away from sharp object.

Packaging and small parts may have choking hazard, please keep them away from children and pets.

Please clean the product according to each clean code, check the product description for more information.

Please keep the product away from fire.

If you have any other questions, please contact us, we will be glad to help you out.

If the product is placed under direct sunlight, the pattern or color might fade away overtime.

Check the product periodically to make sure everything is secured and tightened.

Always use proper tools for installation.

Do not jump on the product.









PRODUCT DESCRIPTION

Chenille fabric. Exceptionally soft, fluffy, and warm to the touch with a fine, plush surface. It offers excellent skin-friendliness and warmth, significantly enhancing the product's coziness and comfort, and infusing a soft, relaxing ambiance into the home.

Equipped with swivel casters: Features 360° smooth, quiet-rolling casters for effortless movement, easy repositioning, floor cleaning, or transitioning between rooms (e.g., living room, study, dining room), enabling “one chair, multiple uses”.

Velcro under seat cushion: The cushion is securely attached to the seat via velcro, effectively preventing slipping or shifting during use or movement, maintaining a neat appearance.

The throw pillow is spacious and comfortable with plump filling. Its generous size and full filling allow it to closely contour to the body, providing excellent localized support as a lumbar or back pillow, significantly enhancing seating relaxation and a sense of cozy.

A core seat for multiple scenarios, a movable comfort station. Its caster design breaks the spatial limits of fixed seating, allowing it to easily serve as a flexible study chair, a cozy dining chair, extra living room seating, or a bedside chair, perfectly adapting to dynamic home life needs.

EXPLODED VIEW

Due to the folding placement during packaging, there may be creases and other marks. Before installing the cover, customers can first lay it flat and smooth it out before installation.

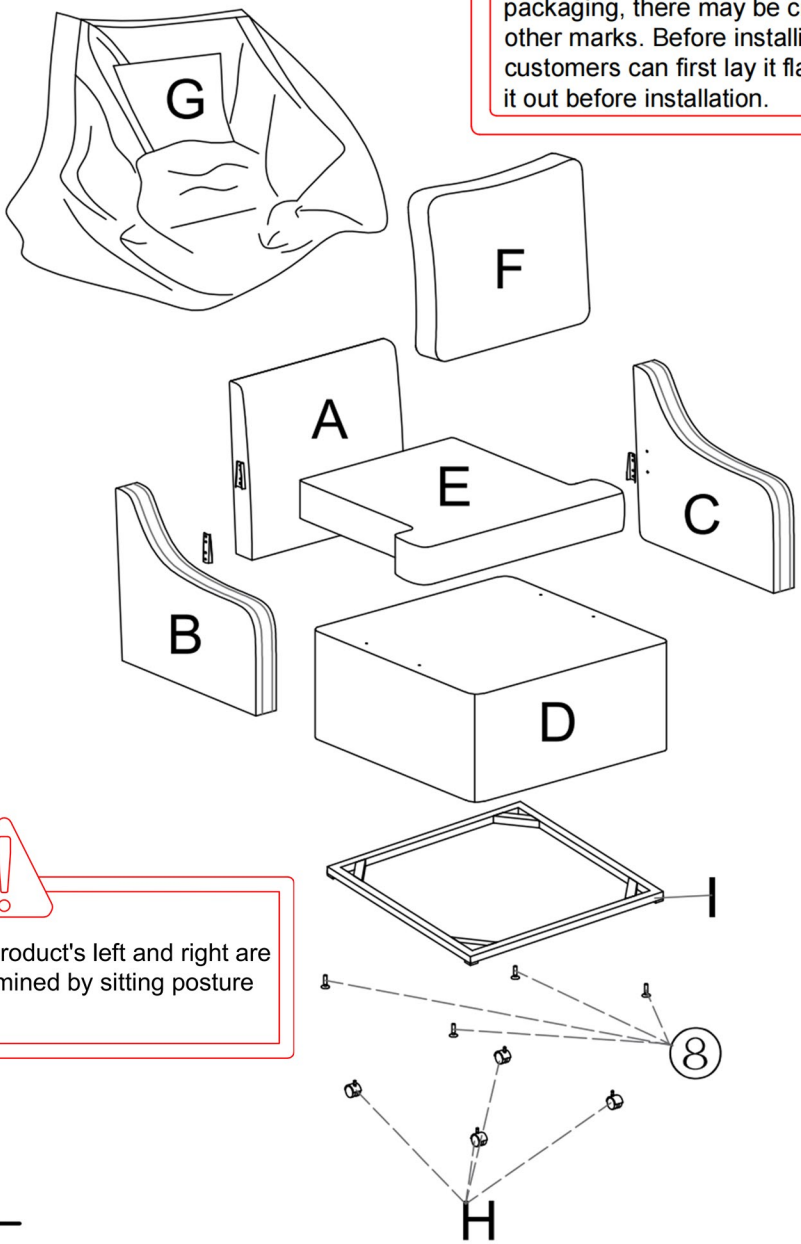

The product's left and right are determined by sitting posture

PARTS

A*1

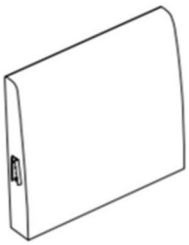

Backrest

B*1

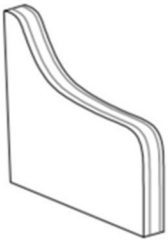

Right armrest

C*1

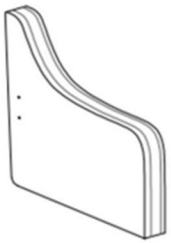

Left armrest

D*1

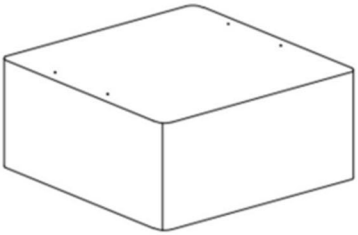

Seat frame

E*1

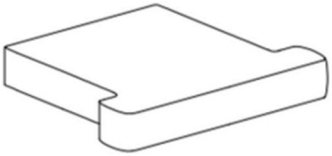

Seat cushion

F*1

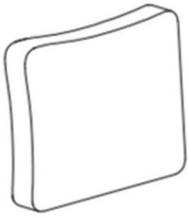

Back cushion

H*4



Caster

G*1

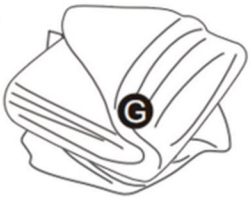

Cloth cover

I*1

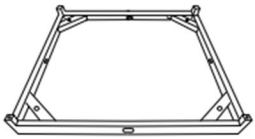

Metal frame

HARDWARE

TOOL LIST

NOTE: Designated with (★) We provide additional spare parts in the hardware package

①*4



★ M6*20mm Bolt

②*4



M8*70mm Threaded Rods

③* 8



★ Washer

④*1



Allen Key

⑤*4



★ Nut

⑥*1



Socket Wrench

⑦*2

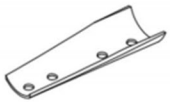

Metal Connectors

⑧*4



Glides

⑩* 4

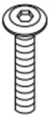

★ M6*35mm Bolt

Please make sure all hardware&packing material fitting the list. Especially some small accessories may be missing during transportation. Please contact us if you have any question.

step 1 ---Take out the Parts

1. Take out everything inside the cushion.
2. Place the iron frame (I) inside the cushion.
3. Secure the iron frame (I) with screws (10).

1.

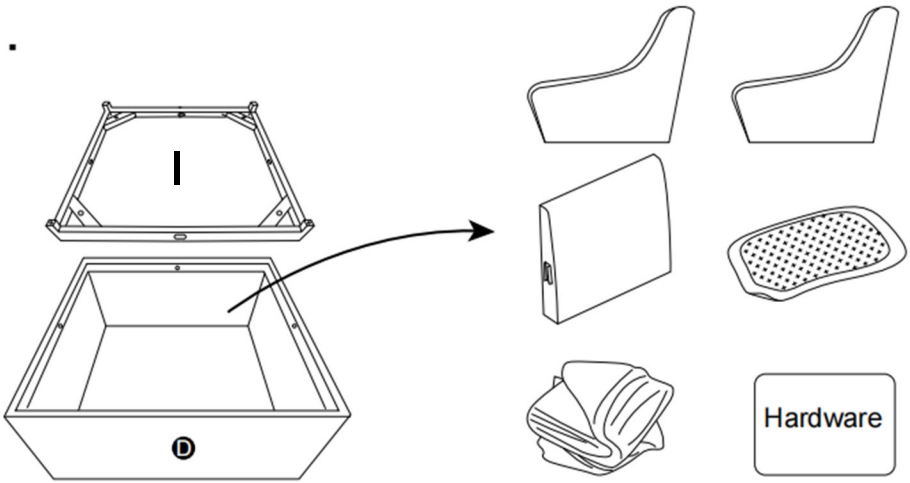

2.

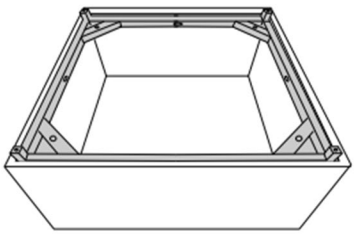

3.

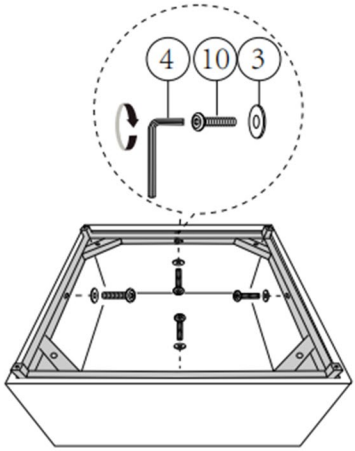

step 2 ---Attach Metal Connectors (7)

Using the provided bolts (1) and Allen wrench (4), attach the Metal Connectors (7) to both Armrests as shown in the diagram.

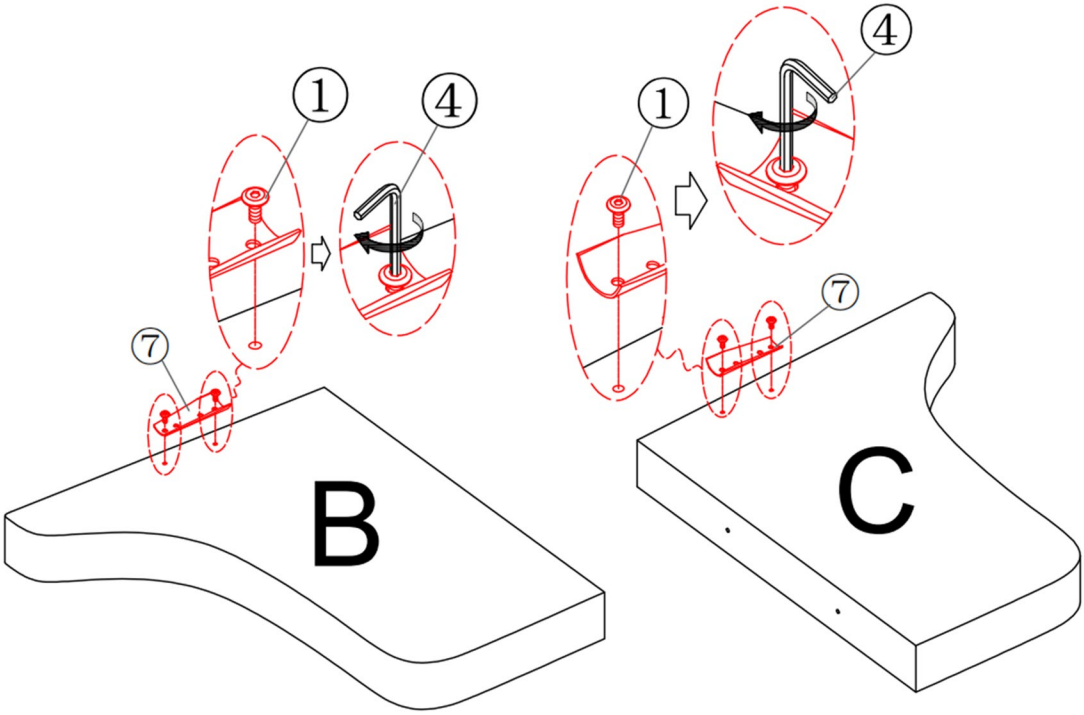

step 3 ---Insert Threaded Rods (2)

Place the Armrests (B&C) on a clean, flat surface. Insert two Threaded Rods (2) into the designated holes on each Armrest (B&C) as shown.

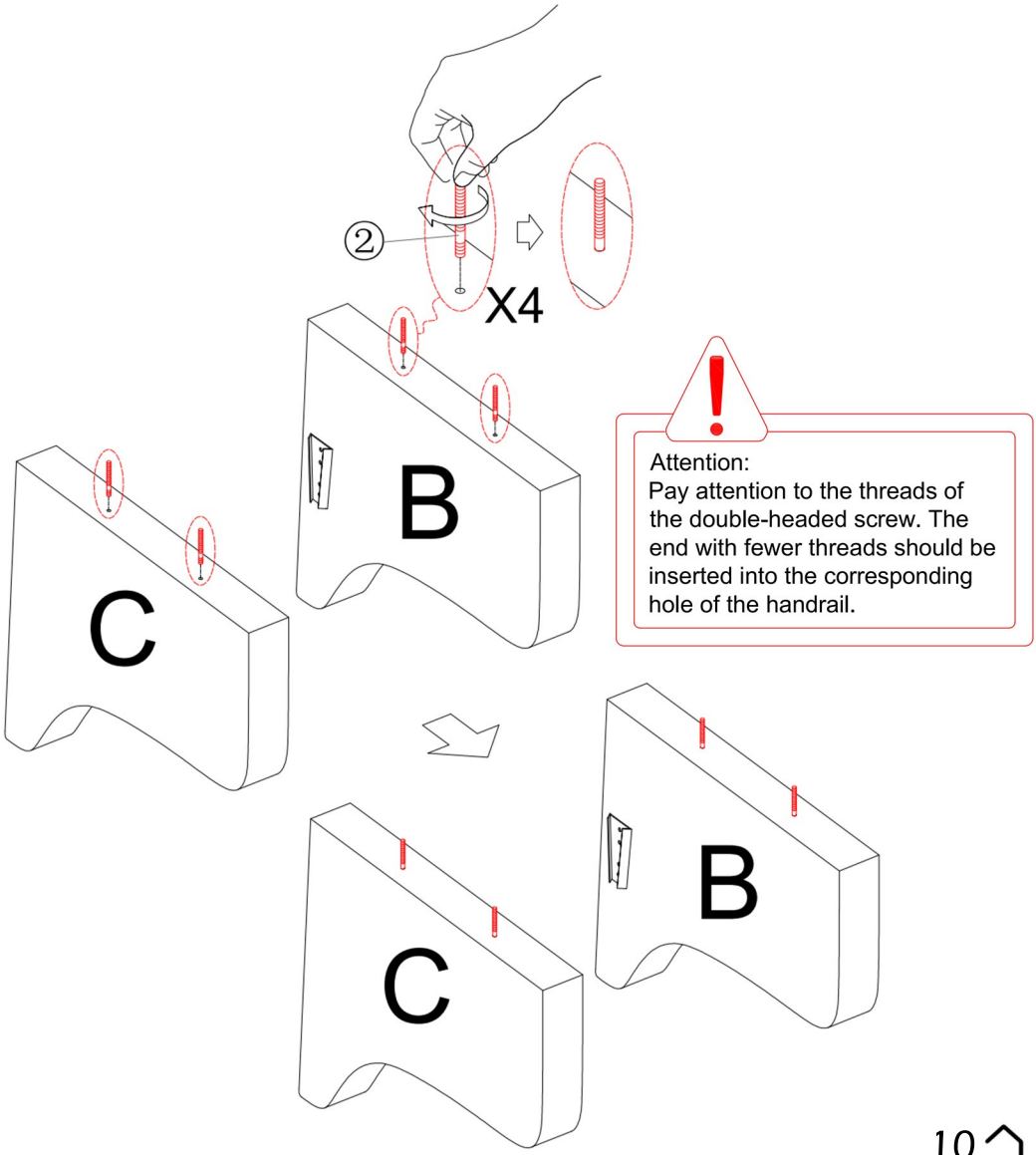

step 4 ---Connect Armrests (B&C) to Seat Frame (D)

Position the Armrest assembly on top of the Seat Frame. Align the holes in the frame with the Threaded Rods on the Armrests. Ensure all holes are correctly aligned before pressing the Armrests firmly down into place.

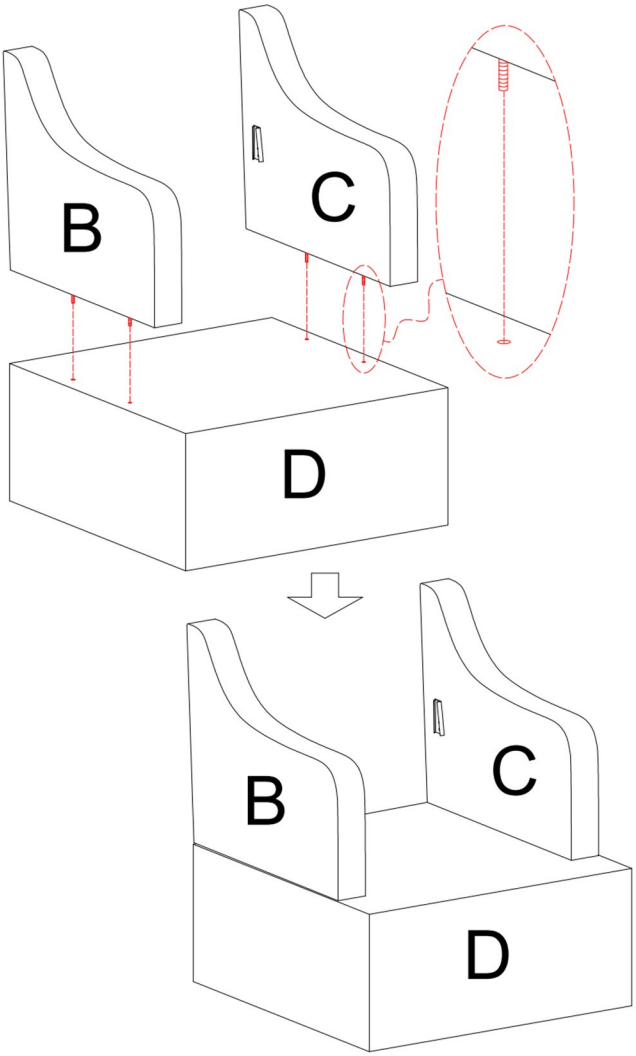

step 5 ---Secure the Armrests (Partially)

Flip the chair frame over. Using the provided Socket Wrench (6), fasten a washer (3) and nut (5) onto each Threaded Rod from underneath. Tighten them to about 80% (snug but not fully tight) to allow for final adjustment in the next steps.

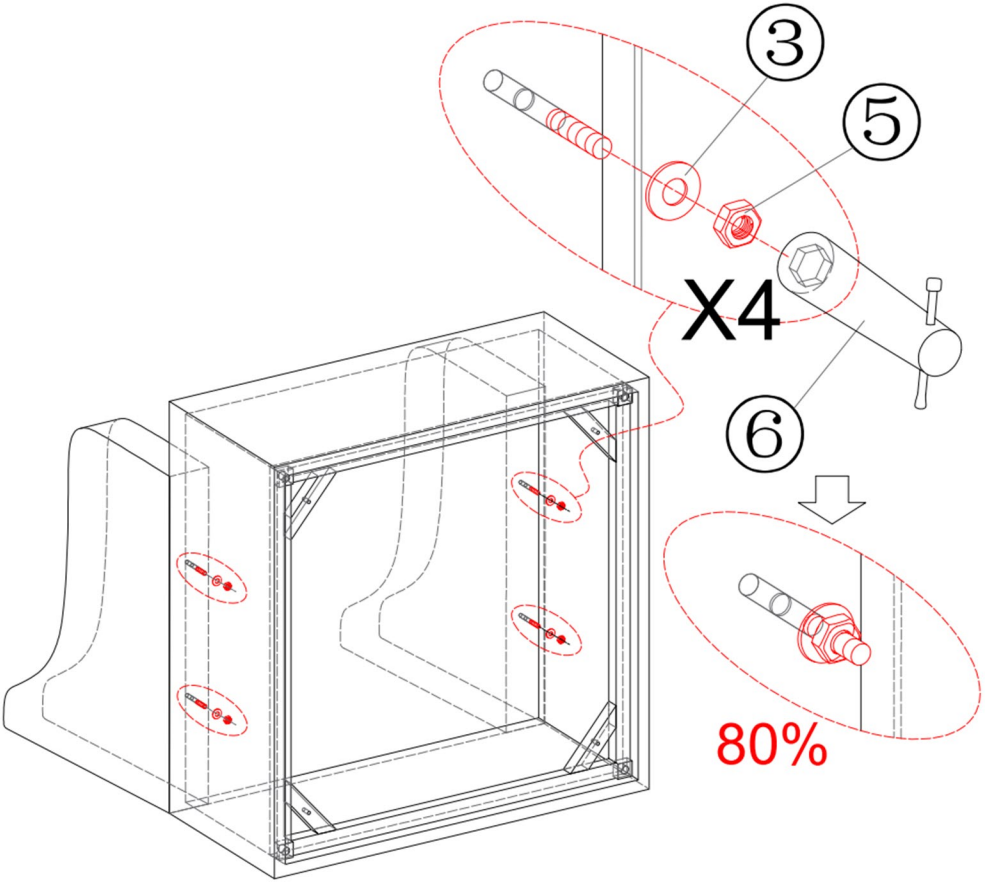

step 6 ---Insert the Backrest (A)

Place the Backrest (A) between the two Armrests. Ensure the mounting connectors on the Backrest are correctly aligned with the corresponding brackets on both sides. Press the Backrest firmly downward until it is fully seated.

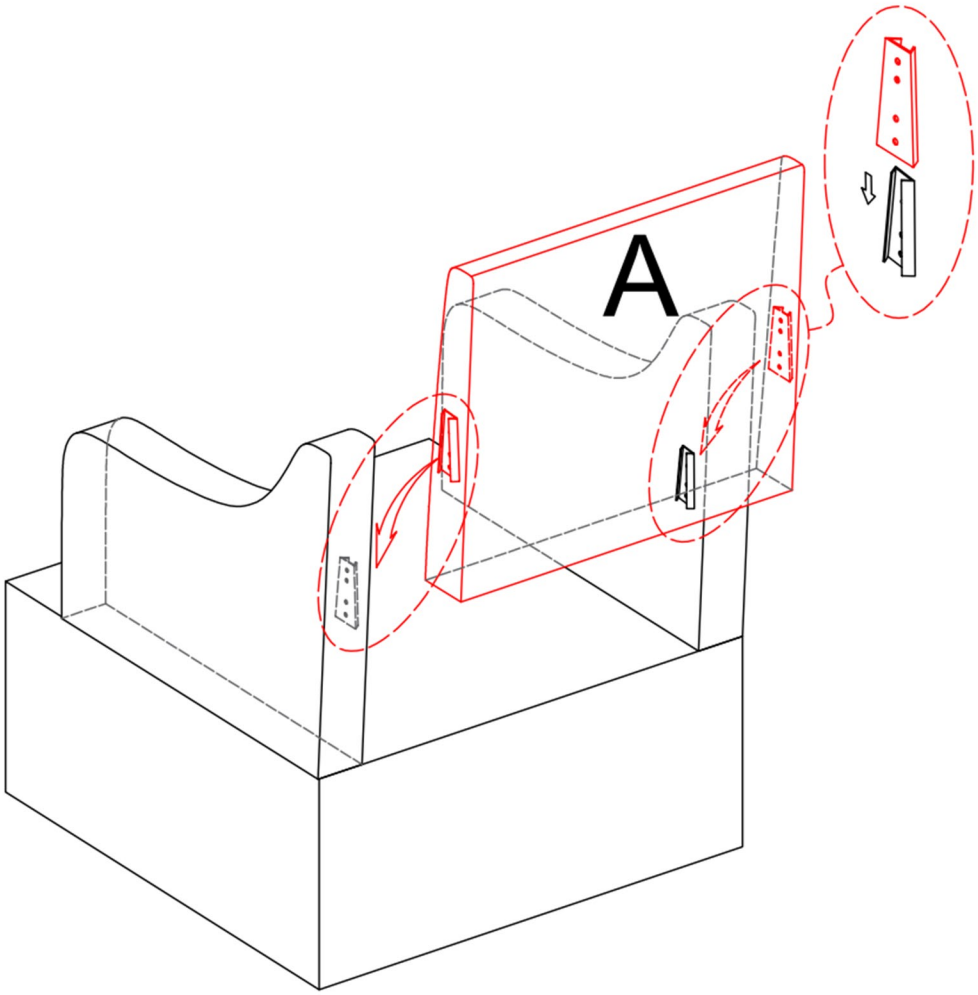

step 7 ---Attach Legs and Casters

From underneath the chair, use the Socket Wrench to now completely tighten all the nuts and washers that were partially secured in Step 4. Ensure all connections are firm.

As shown in the diagram, twist the Chair Legs (8) into the sockets at the corners of the chair base. Then, press a Caster (H) into the hole next to the legs.

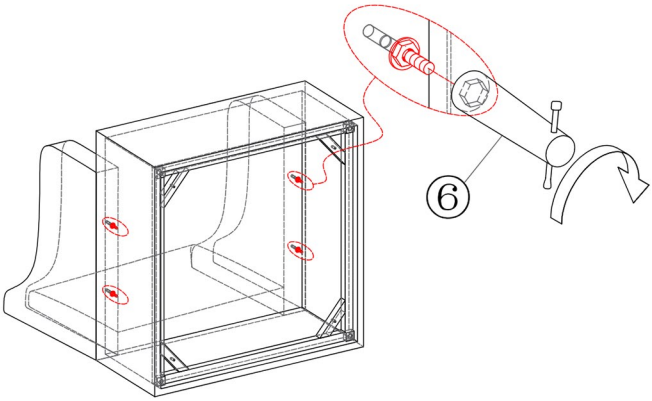

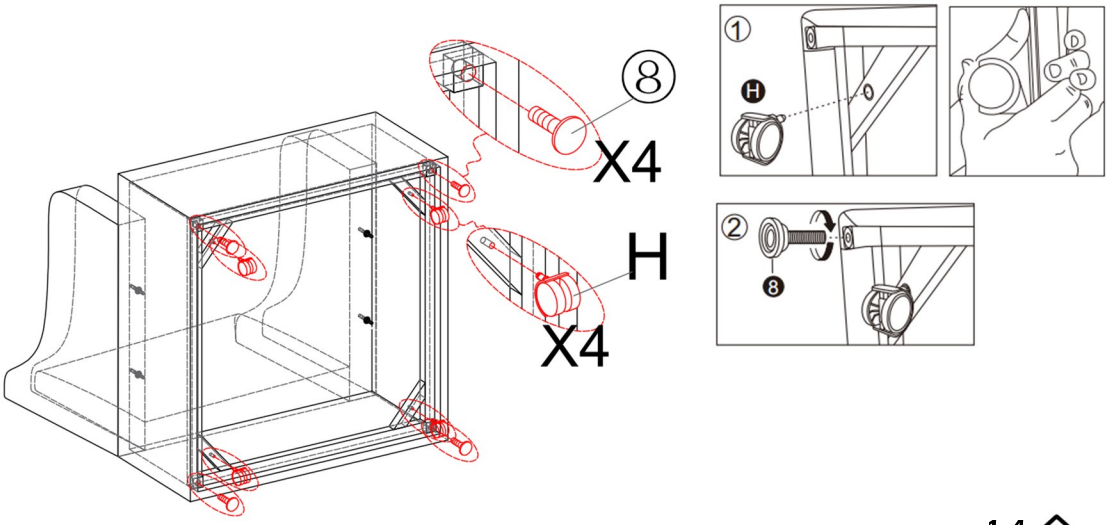

step 8 ---Install the Slipcover

Unfold the Slipcover. Locate and unzip the zipper, which runs along the back of the cover.
Drape the Slipcover over the assembled chair. Tape the bottom edges firmly into the Velcro around the base. Once properly positioned, pull the zipper closed from the back.

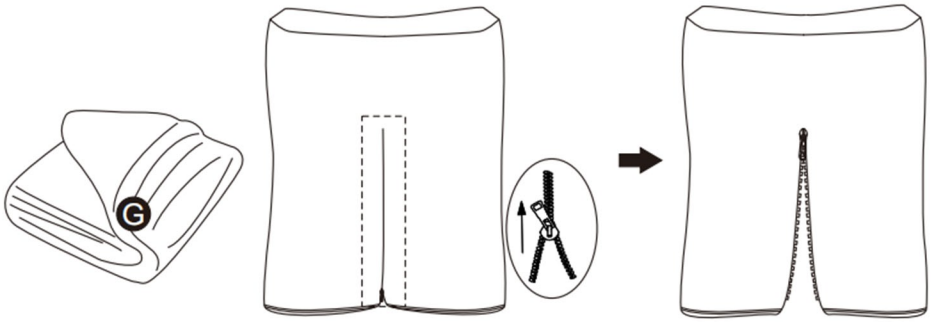

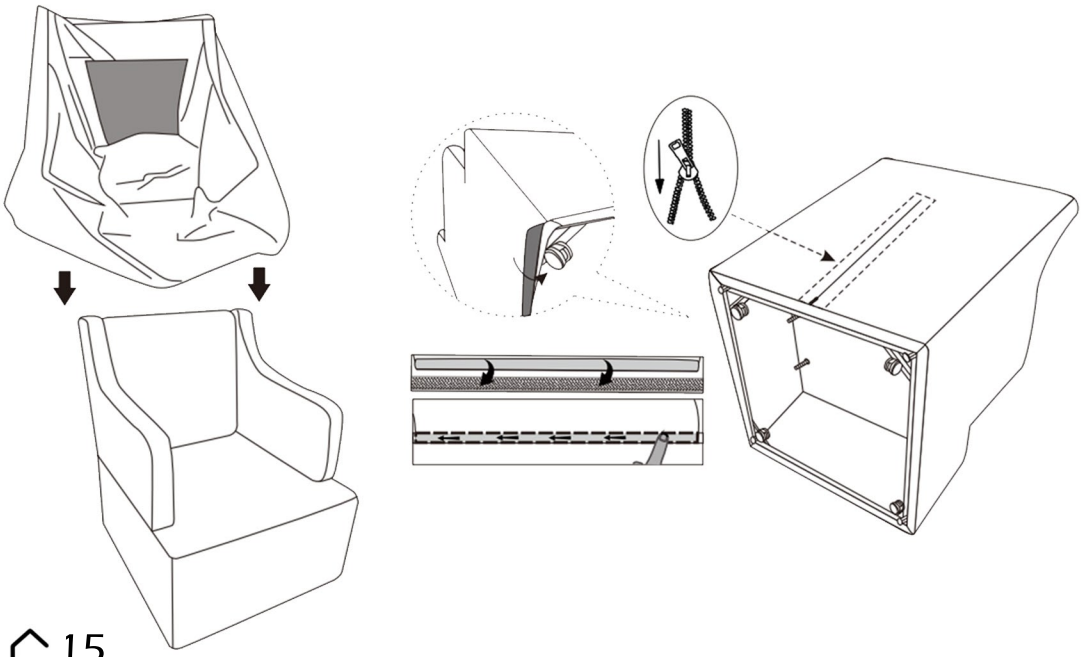

step 9 ---Cut the plastic air compression bags

Cut the plastic air compression bags, and take out the cushion (E&F). Let it recover to its original shape, the whole recovery process might take 48 hours, you may gently slap on it to speed up the process.

Use care when opening the bag to avoid injury from sudden expansion. Keep away from face and body while cutting.

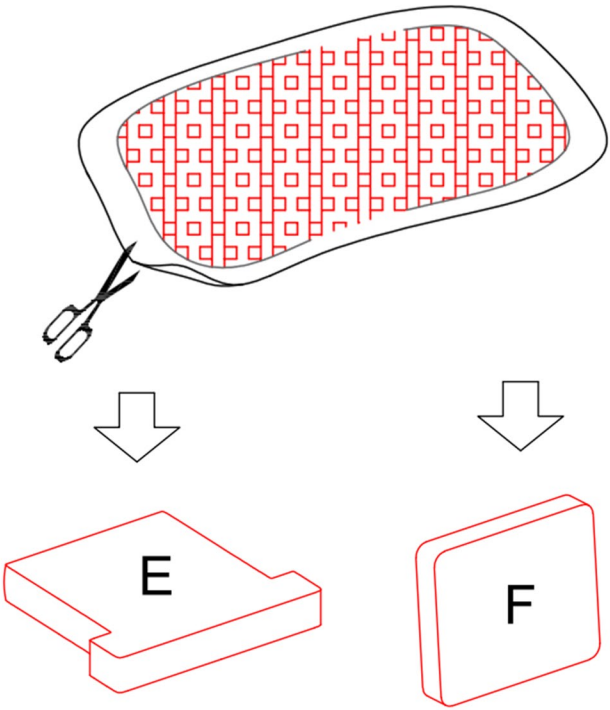

step 10 ---Place the Seat cushion (E) &Back cushion (F).

Place the Seat cushion (E) on it.

Place the Back cushion (F) on it.

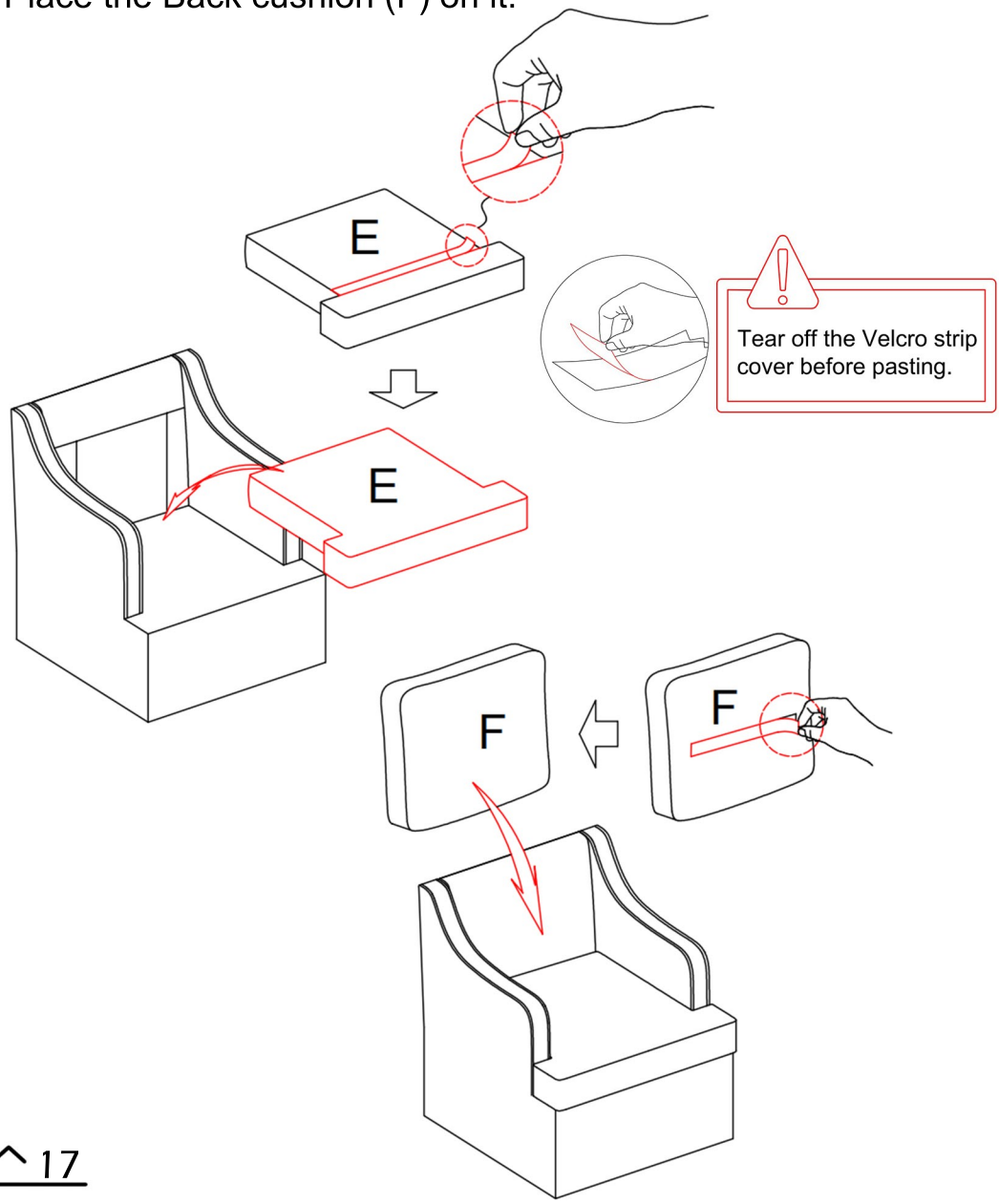

step 11---Assemble complete

Place the chair properly and tidy it up to make it look nice.
Assembly is complete.Thank you for choosing our product!
Please enjoy!





ASSEMBLY INSTRUCTIONS

Tel.(562)-781-3327

Please contact us:info@firstopintl.com

https://www.dreamsidea.com