NTC
furniture
www.ntcfurniture.com
customerservice@ntcfurniture.com

NTC
furniture
www.ntcfurniture.com

ASSEMBLY INSTRUCTION

FLY BED FRAME KING/QUEEN/FULL

Thank you for choosing NTC for your furniture needs!

We pride ourselves in high-quality products, made with the finest materials and craftsmanship, brought to you directly from our factory in Vietnam.

IMPORTANT INFORMATION

Read all assembly and care instructions carefully before using this product, and store them for future reference.

- Choose a flat and smooth surface to place the bed frame parts.
- Use the correctly indicated components for each step of assembly.
- Assemble components on a soft, clean surface to prevent scratching and/or damaging the finish.
- Ensure all parts are accounted for before disposing of packaging.
- This package contains small parts. Keep away from children and pets prior to and during assembly. Adult assembly required. Ensure any leftover screws after assembly are kept out of reach of children.

USE & CARE

No waxing or oiling required for our product. Keep it clean effortlessly by dusting with a soft, dry cloth. For a deeper clean, use a damp, non-abrasive cloth with a mild detergent solution, and wipe dry immediately.

Protect the wood finish from moisture and heat. Quickly wipe up spills or moisture to prevent damage. Keep your bed frame at a safe distance from heat sources to avoid any potential harm.

NTC WARRANTY POLICY

- 30-day satisfaction warranty across our product line.
- Only applied to purchases from authorized retailers.
- Proof of purchase is required.
- Photos may be used to determine the cause of defects and for future quality control.
- Replacement parts or products will be sent at our discretion if the defect is the result of any fault on our side.

* NTC is not responsible for normal wear and tear, products used commercially, or failures caused by accidents, abuse, alteration, modification, misuse, or improper care. We accepts no liability whatsoever for the safety, reliability, durability and performance of any of our products. In no event shall NTC be liable for incidental or consequential damages.

For any questions, comments, or concerns, please contact NTC store or reach out to us via email at customerservice@ntcfurniture.com

7

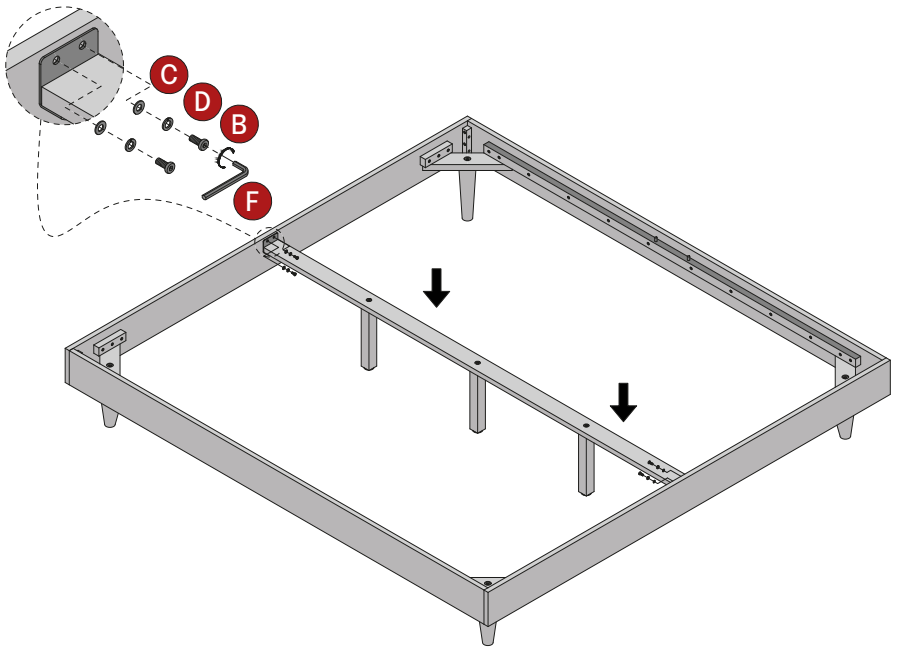

8

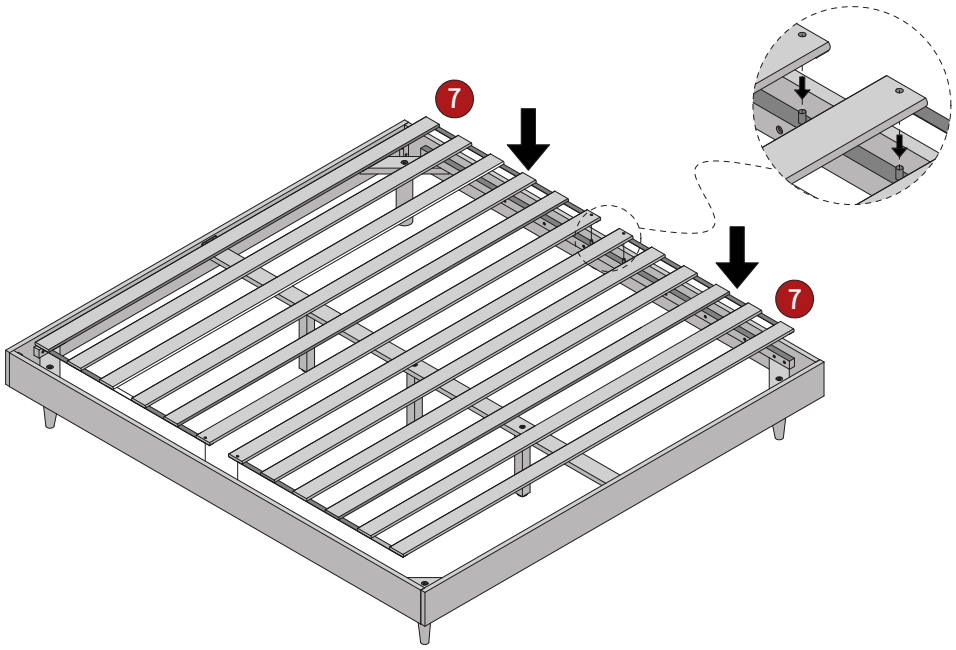

5

IMPORTANT: When flipping the frame, exercise extreme caution and make sure to have at least 2 people to ensure stability and prevent accidents.

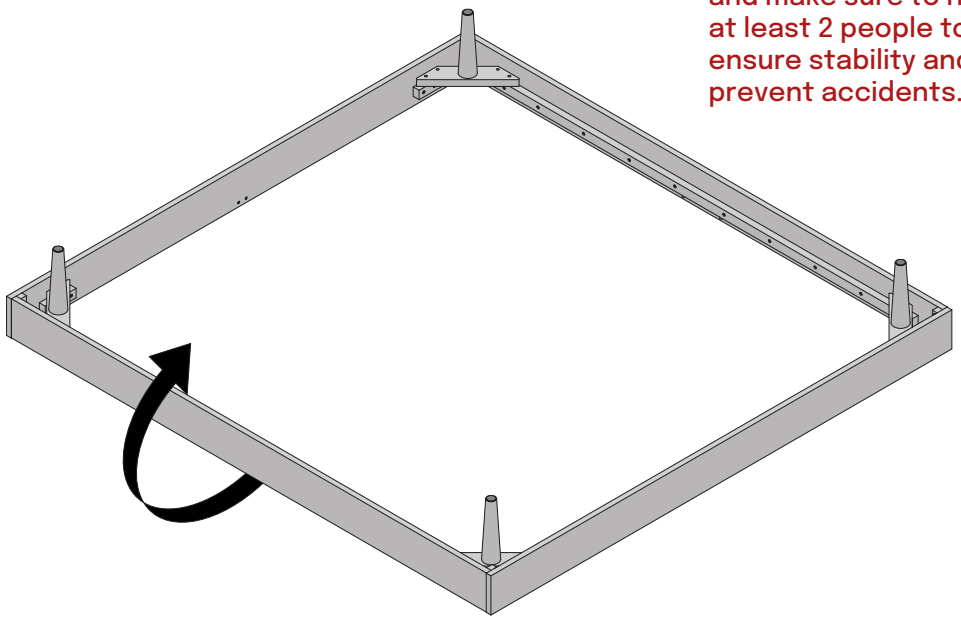

6

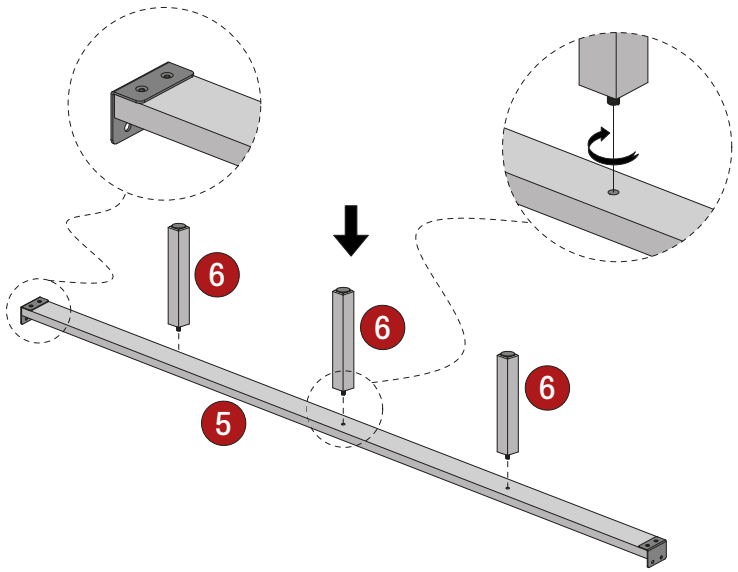

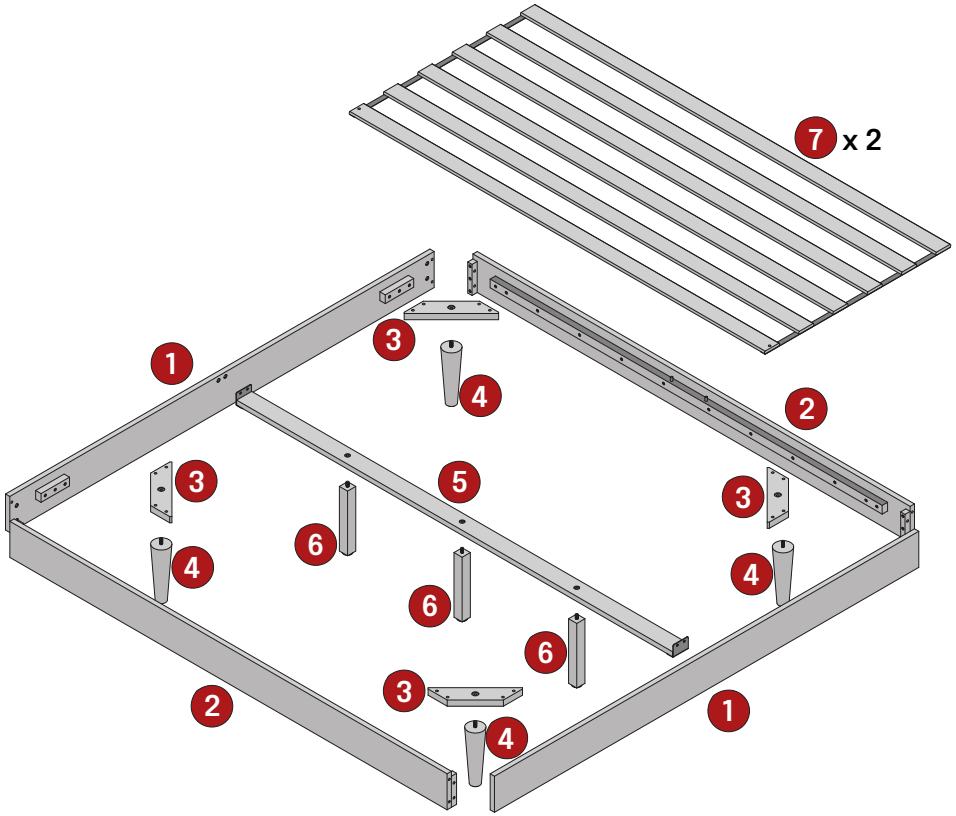

Hardware List

A		M8*35 Bolt	8
B		M8*20 Bolt	4
C		Flat Washer	12
D		Lock Washer	12

E		M7*40 Screw	16
F	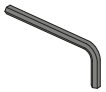	M5 Allen Key	1
G		M4 Allen Key	1

1

IMPORTANT: Do not fully tighten any screws until all steps have been completed correctly.

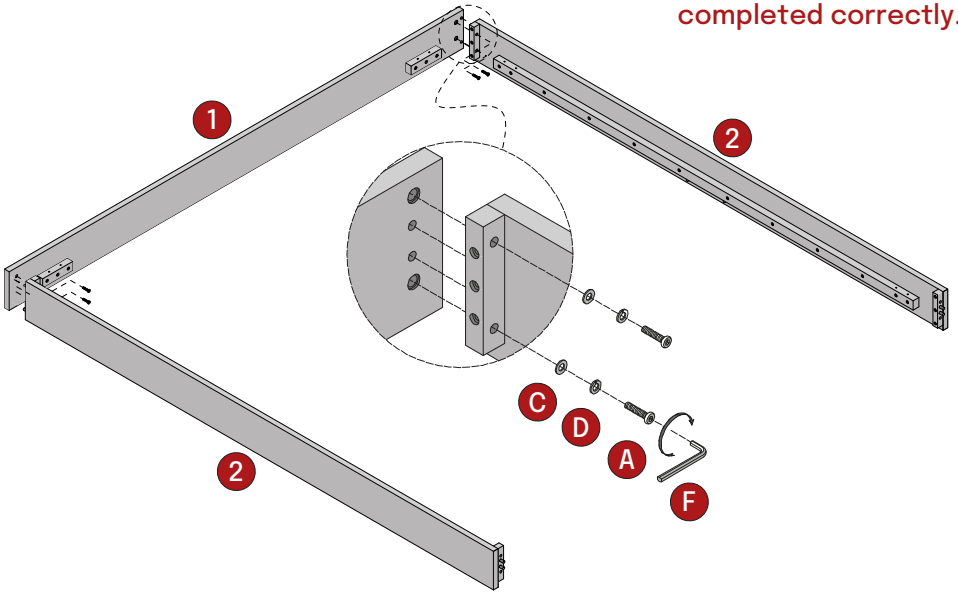

2

IMPORTANT: Do not fully tighten any screws until all steps have been completed correctly.

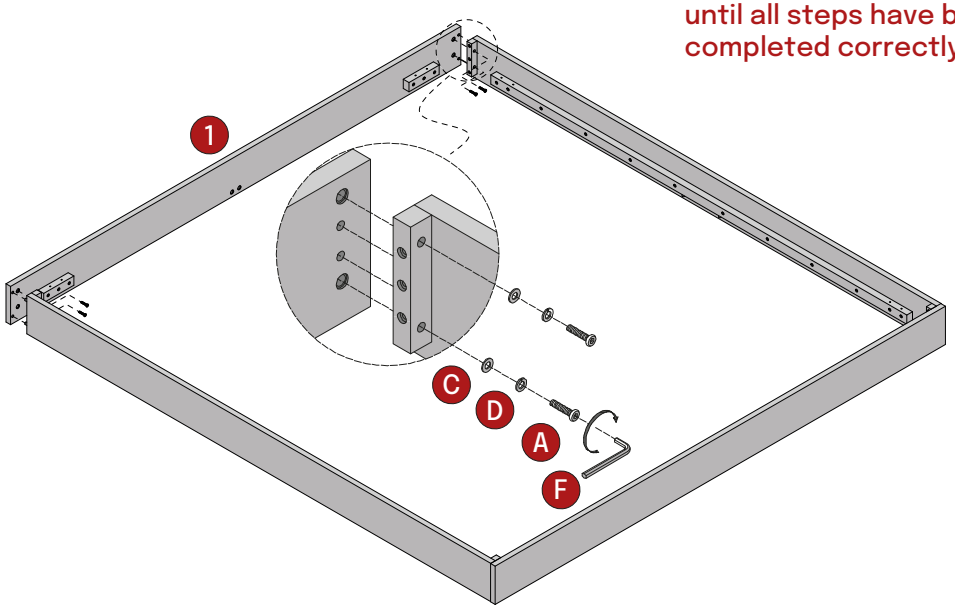

3

IMPORTANT: Do not fully tighten any screws until all steps have been completed correctly.

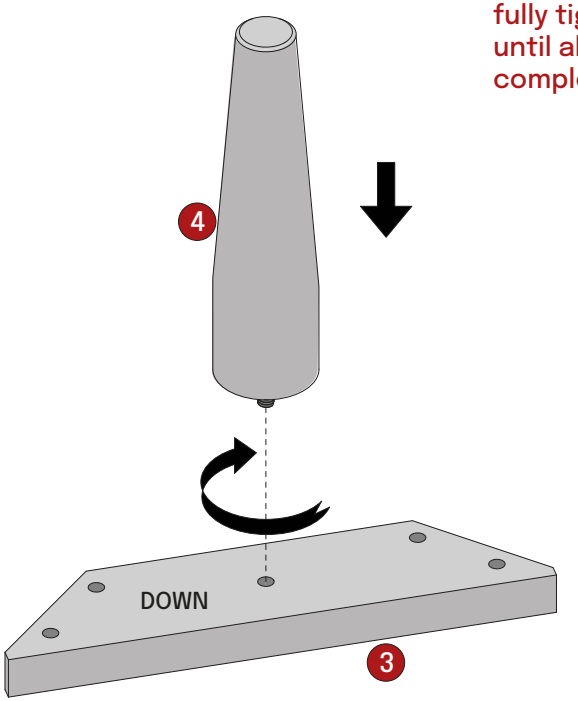

4
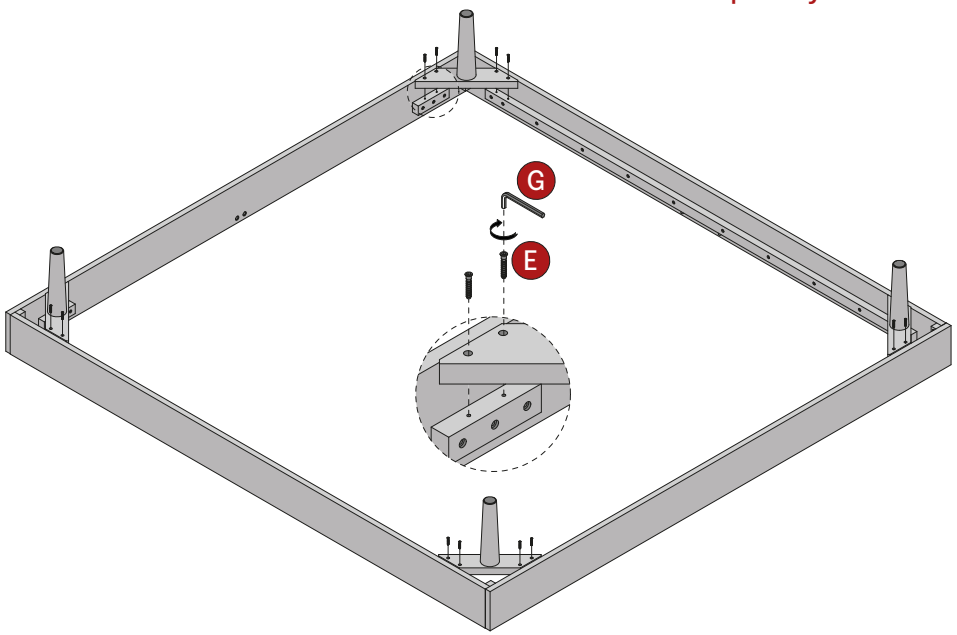
Tighten all screws completely.