Modular Cabinet

Assembly Instruction - Please keep properly for future reference.

If you find any missing boxes, damaged parts, or accessory shortages, please contact the customer service team of your purchasing channel immediately. We will resolve the issue as quickly as possible.

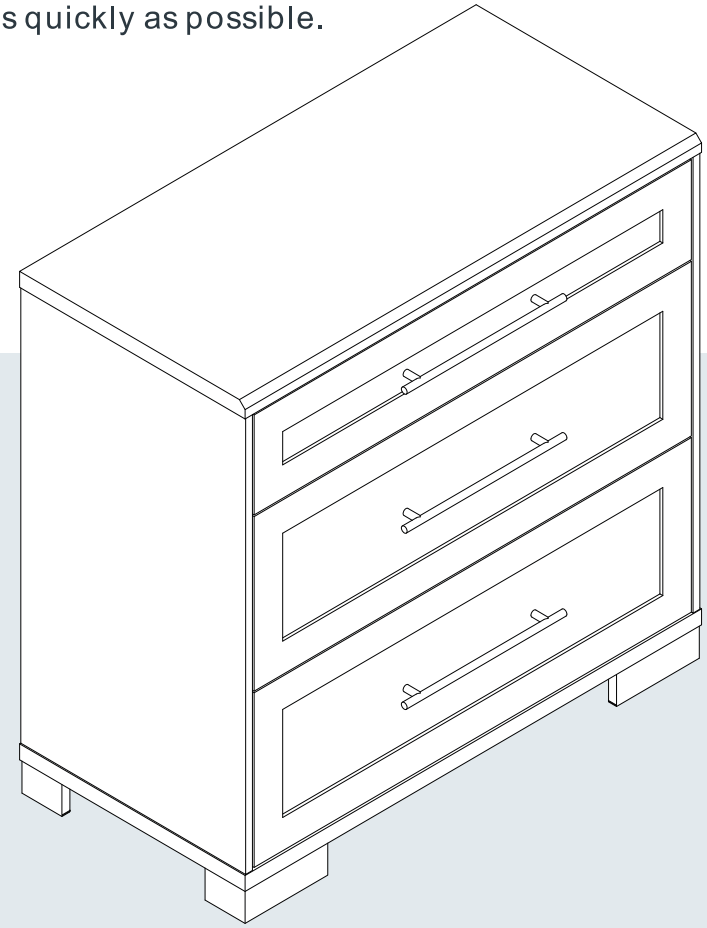

Dimensions

Width - 31.5 inch
Depth - 15.5 inch
Height - 31 inch

EN

CONTACT US

- **Email: service@grandtunnel.com**
  In order to receive assistance more quickly, please provide

THE FOLLOWING INFORMATION:

- Order number
- Purchase platform
- Purchase date
- Detailed description of the issue along with photos (if applicable)

Important – Please read these instructions carefully before starting the installation.

Safety and Care Advice

Important – Please read these instructions fully before starting assembly

• Check you have all the components and tools listed on the following pages.

• Remove all fittings from the plastic bags and separate them into their groups.

• Keep children and animals away from the work area, small parts could choke if swallowed.

• Make sure you have enough space to layout the parts before starting.

• During assembly do not stand or put weight on the product, this could cause damage.

• Assemble the item as close to its final position (in the same room) as possible.

• Assemble on a soft level surface to avoid damaging the unit or your floor.

• Parts of the assembly will be easier with 2 people.

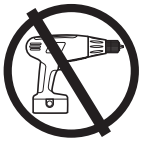

• To reduce the likelihood of damaging your product please ensure that your power drill is set on a low torque setting.

Care and maintenance

• Only clean using a damp cloth and mild detergent, do no use bleach or abrasive cleaners.

• From time to time check that there are no loose screws on this unit.

• This product should not be discarded with household waste. Take to your local authority waste disposal centre.

Handy Hints

• Assemble all parts and bolts loosely during assembly, only once the product is complete should you fully tighten the bolts

• Regularly check and ensure that all bolts and fittings are tightend properly.

WARNING

In order to help prevent overturning – please follow these instructions

To help prevent product toppling over please follow the below steps:-

Use the anti tip strap or wall fixing method provided (if applicable)
Do not allow children to climb or hang on the furniture
Do not open more than one drawer at a time
Do not place heavy items in the top drawers
Do not place heavy items on top of the furniture, unless the furniture has been designed for this purpose

Please note that only the anti tip strap is provided.
You will need to provide wall plugs and screws applicable for your wall type

CUSTOMER SERVICE GUIDE

Thank you for choosing our product! We are committed to providing you with excellent service. If you find any missing parts, damaged packaging, or product damage after receiving all packages, please follow the steps below to quickly contact our customer service team. We will do our best to resolve your issue.

1. Missing Parts

Verify Parts:

1. Refer to the “Parts List” in the manual to verify the name, specifications, and quantity of the missing parts.
2. Take a clear photo of the parts list and mark the missing parts with detailed information, e.g., “Missing 5 pieces of M6x30mm screws.”

Contact Us:

· By Email:
Send an email to service@grandtunnel.com, with the subject line “Missing Parts Issue.” Include the following in the email:
· A description of the missing parts and a photo of the parts list.
· Order details (order number, purchase platform, purchase date).

2. Product or Packaging Damage

If it affects normal use:

Steps:

1. Take clear photos or videos showing the damaged parts and the extent of the damage (multi-angle shots are recommended).
2. Email the photos/videos along with other details to service@grandtunnel.com, with the subject line “Product Damage Issue.”

Resolution:

After verification, we will arrange for a replacement part, product exchange, or refund as quickly as possible.

If it does not affect normal use:

Steps:

1. Contact our customer service team (by email: service@grandtunnel.com).
2. Provide a description of the damage and include relevant photos or videos.

Resolution:

We will provide repair guidance or an appropriate compensation plan based on the specific situation.

Contact Us:

· Customer Service Email: service@grandtunnel.com

Helpful Tips

To process your issue efficiently, please prepare the following information:
· Order details (order number, purchase platform, purchase date).
· Clear photos or videos.
· We are committed to providing quick and professional solutions, no matter the size of the issue, to ensure your satisfaction.
Thank you for your trust and support! We hope you enjoy using our product!

Parts List-Fittings

Please check you have all the fittings listed below

Note: The quantities below are the correct amount to complete the assembly. In some cases more fittings may be supplied than are required.

A  7*43mm Cam Bolt x 27	**B**  Cam Lock x 27	**C**  6*30mm Wooden Dowel x 12
D  5*40mm Screw x 19	**E**  7*9mm Screw x 18	**F**  Drawer Slide x 6
G  6*12mm Bolt x 12	**H**  M4 Key x 1	**I**  Legs x 2
J  Legs x 2	**K**  Back Panel Stiffener x 10	**L** 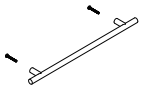 Handle & Fixings x 3
M  4*10mm Screw x 6	**N** 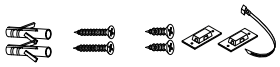 Wall Fixing Pack x 2	

Tools required



Phllips screwdriver
(medium & large)

Ruler - Use this ruler to help correctly identify the screws mm

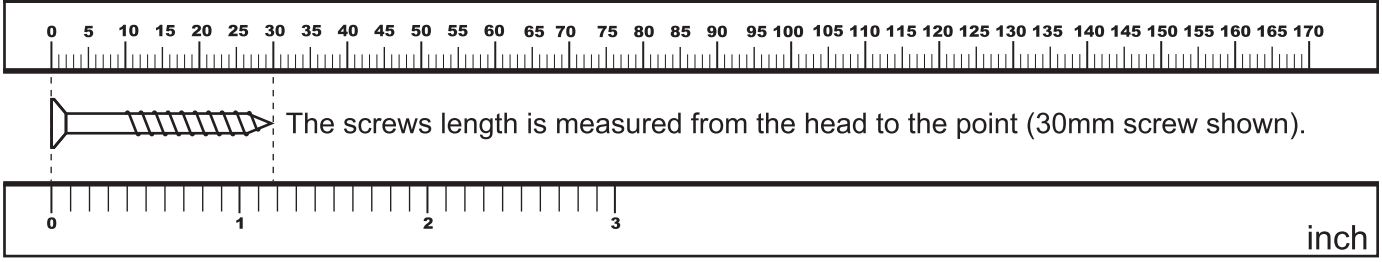

Using Camlocks

Step 1

Connect the male camlock as directed in the assembly instructions using a screwdriver.

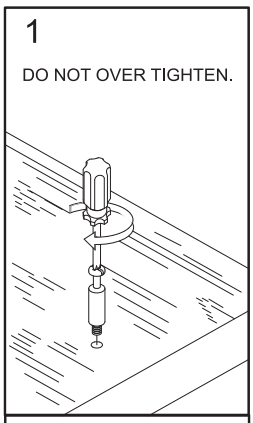

Step 2

Push the male camlock into the entry hole.

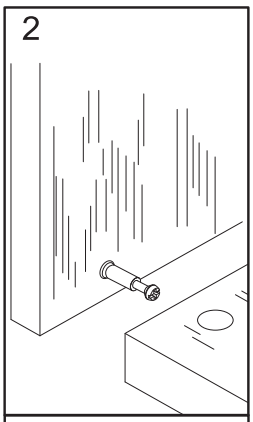

Step 3

Insert the female camlock as shown in the instructions.

Note: ensure that the arrow on the top of the camlock points towards the entry hole for the male camlock.

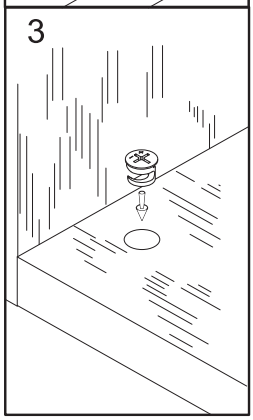

Step 4

Turn the female camlock clockwise with a screwdriver.

You should feel a click when the camlock is locked in place.

The joint is now secure.

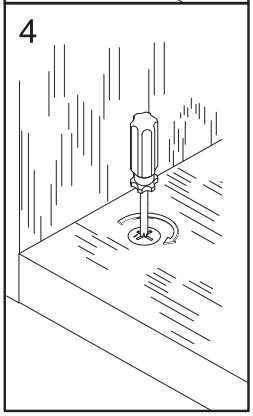

Parts List-Panels

Please check you have all the panels listed below

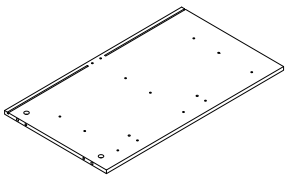

1 (68.8 x 39.4 x 1.2) x1

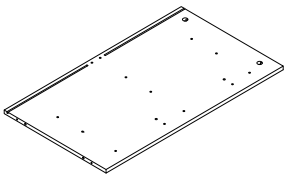

2 (68.8 x 39.4 x 1.2) x1

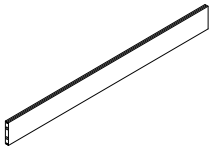

3 (77.4 x 7.5 x 1.2) x1

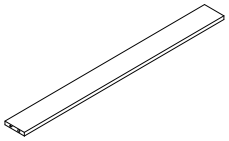

4 (77.4 x 7.5 x 1.2) x2

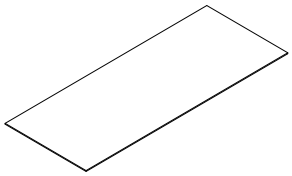

5 (78.4 x 31.5 x 0.25) x2

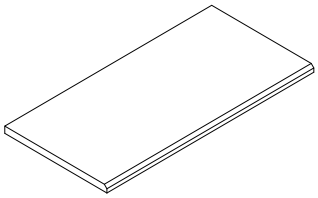

6 (80 x 39.5 x 2.4) x1

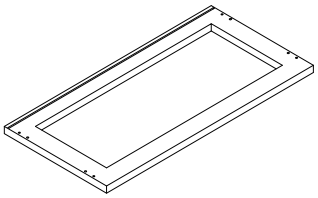

7 (80 x 39.5 x 2.4) x1

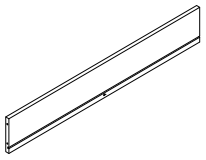

8 (73.8 x 11.5 x 1.2) x1



10 (30 x 11.5 x 1.2) x1



11 (28.7 x 4 x 1.2) x3

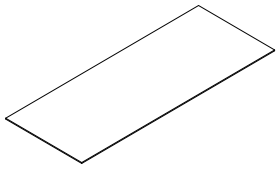

12 (74.9 x 29.5 x 0.25) x3

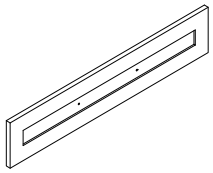

13 (76.7 x 15.4 x 1.5) x1

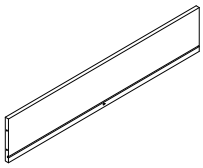

14 (73.8 x 14.5 x 1.2) x2

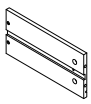

15 (30 x 14.5 x 1.2) x2

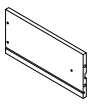

16 (30 x 14.5 x 1.2) x2

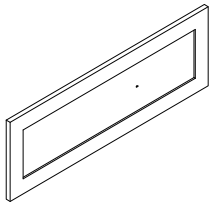

17 (76.7 x 15.4 x 1.5) x2



18 (30 x 11.5 x 1.2) x1

Assembly Instructions

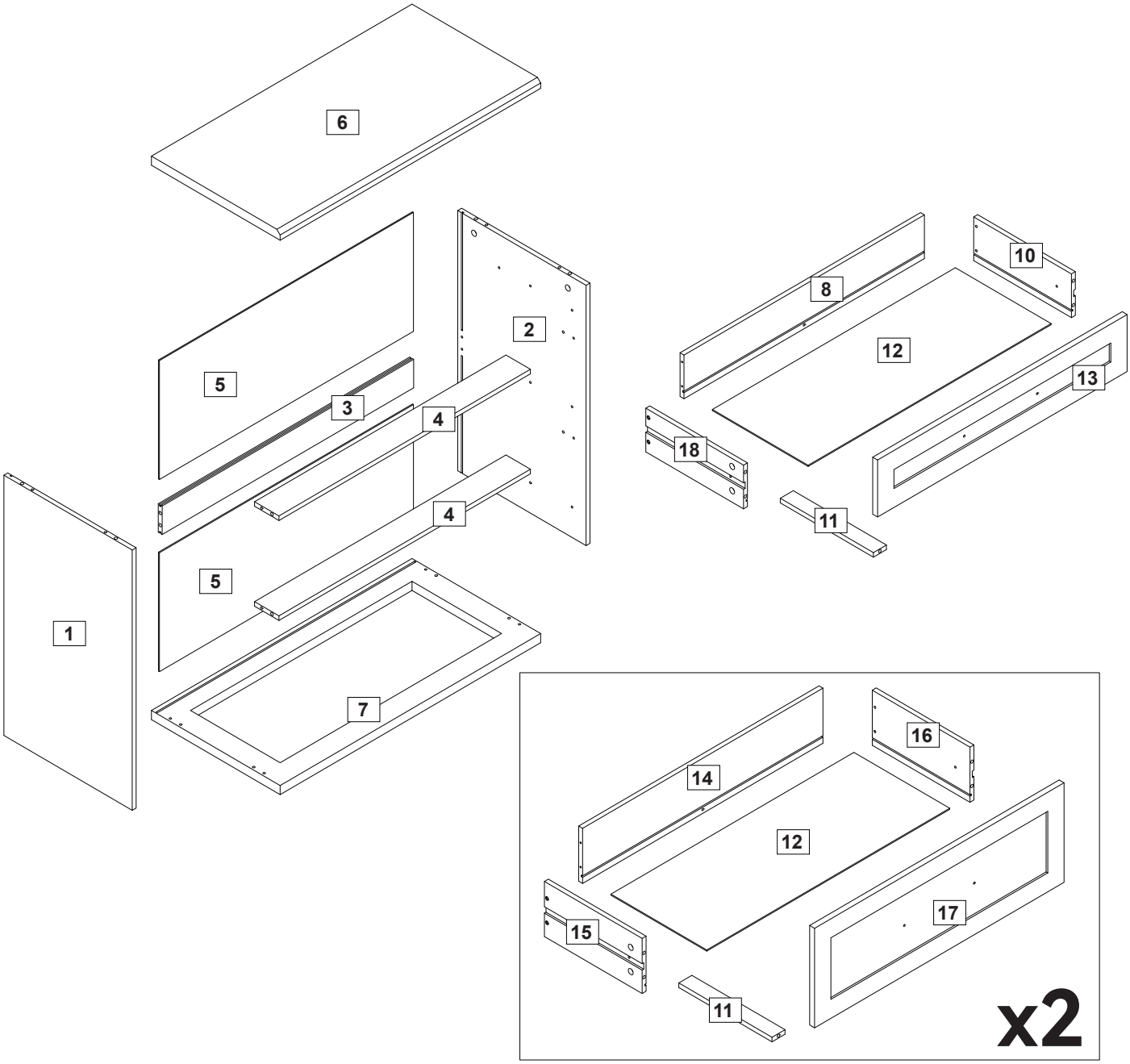

Assembly Instructions

Step 1

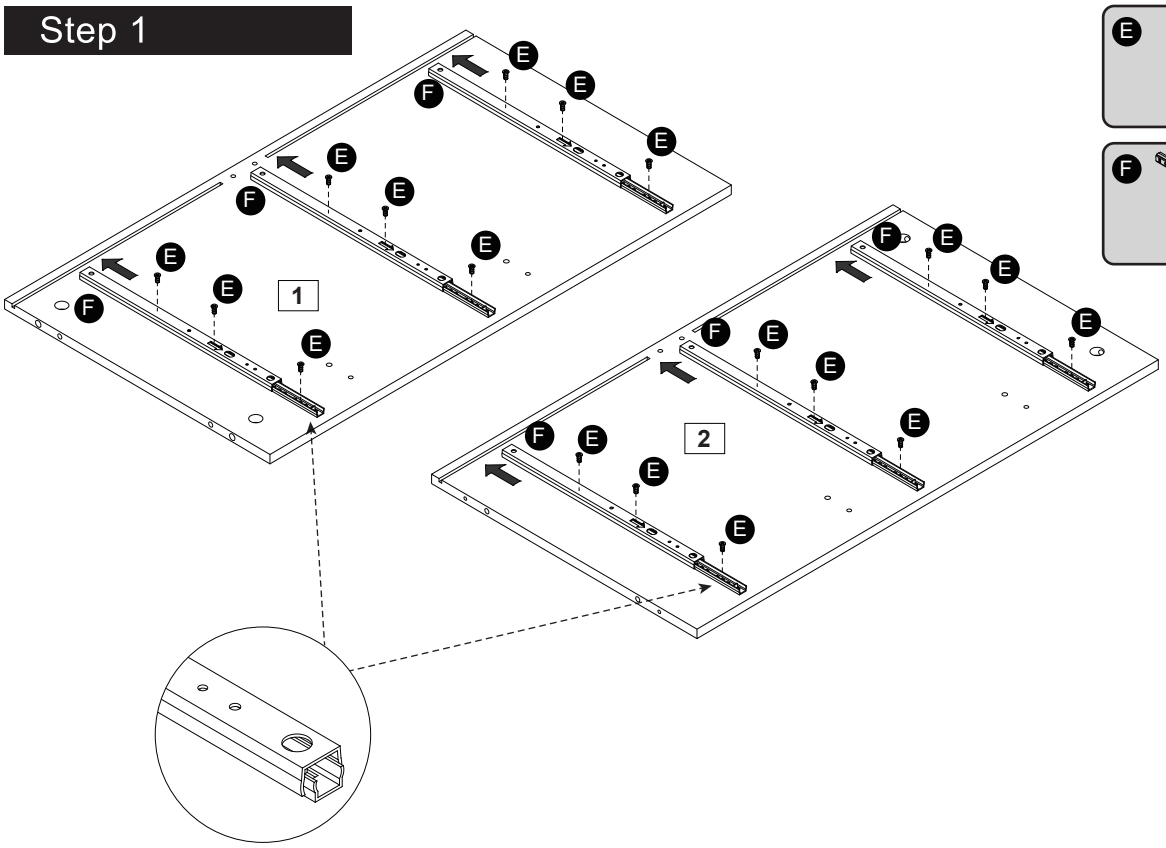

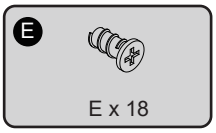

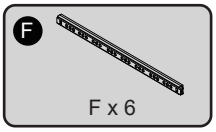

Attach the drawer slides (F) to panels (1) and (2) using screws (E), as shown.

1-1

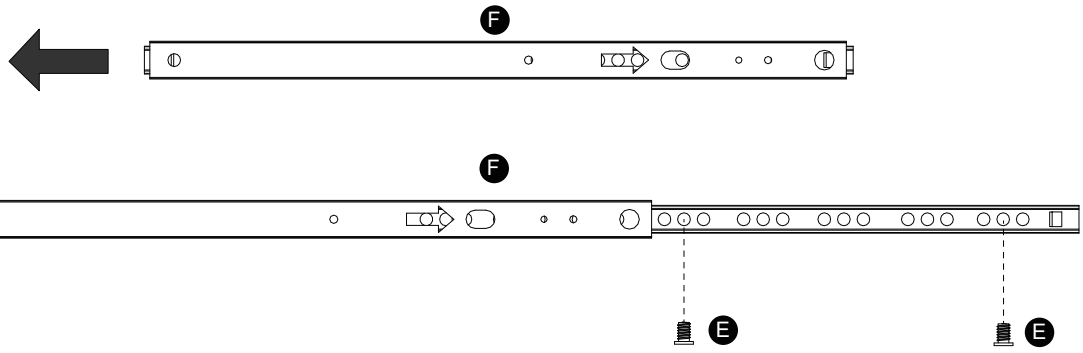

1-2

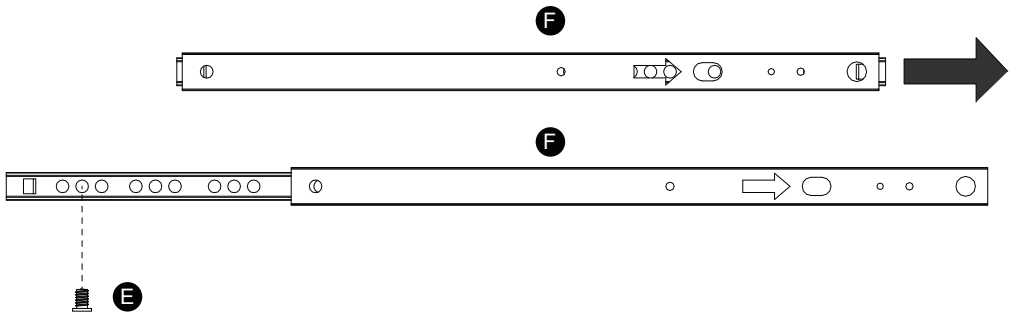

Assembly Instructions

Step 2

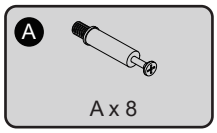

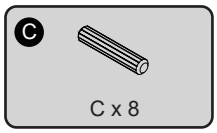

CAM-LOCK
Tighten until shoulder is flush with panel.Do not overtighten or undertighten(see example below)

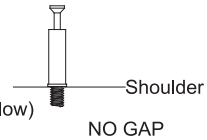

1. Screw the 2-in-1 connector bolts (A) into panels (1) and (2).
2. Insert the wooden dowels (C) into panels (1) and (2).

Step 3

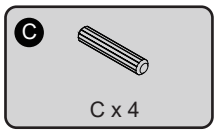

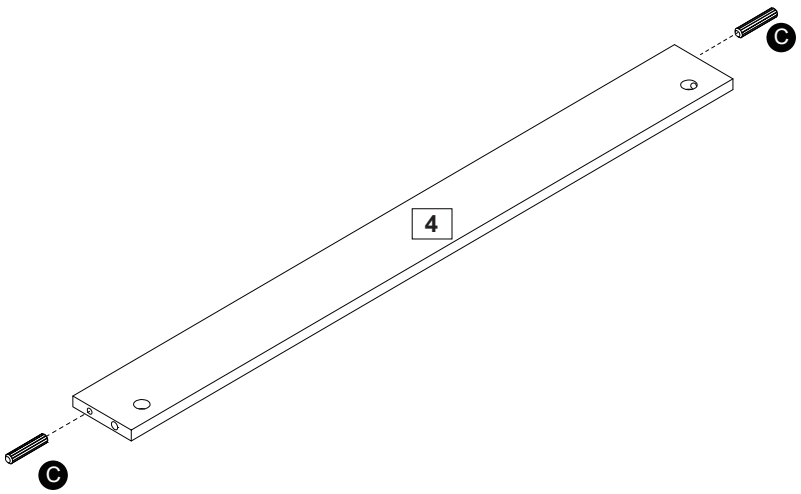

Insert the wooden dowels (C) into panel (4).

x2

Assembly Instructions

Step 4

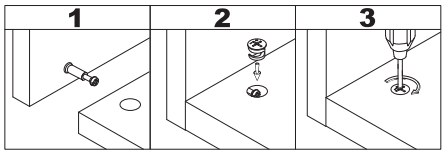

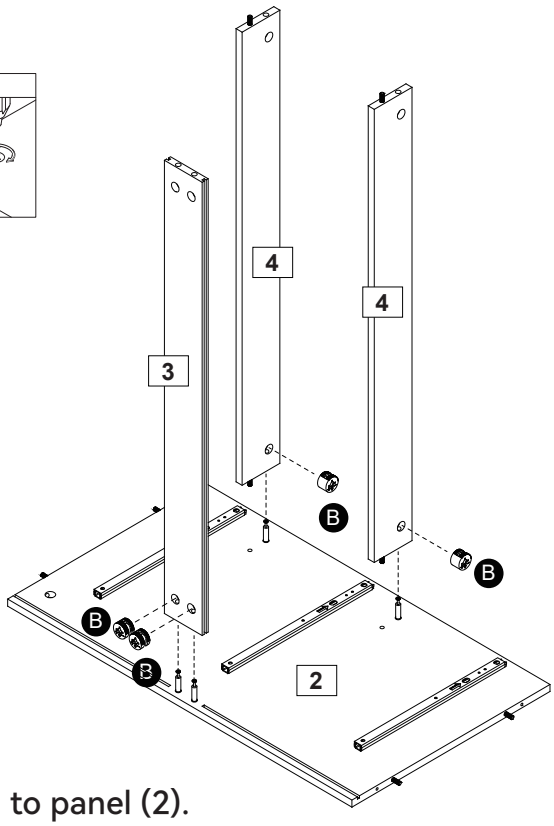

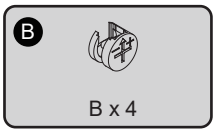

Connect panels (3) and (4) to panel (2).
Insert the cam locks (B) into panels (3) and (4) and tighten.

Step 5

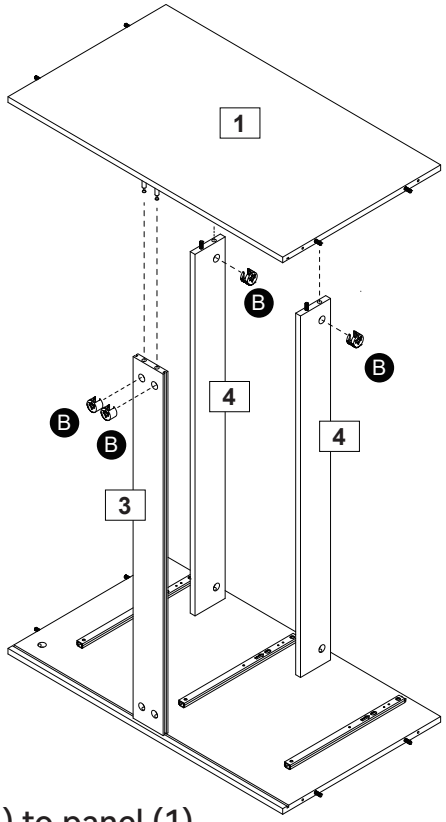

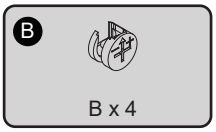

Connect panels (3) and (4) to panel (1).
Insert the cam locks (B) into panels (3) and (4) and tighten.

Assembly Instructions

Step 6

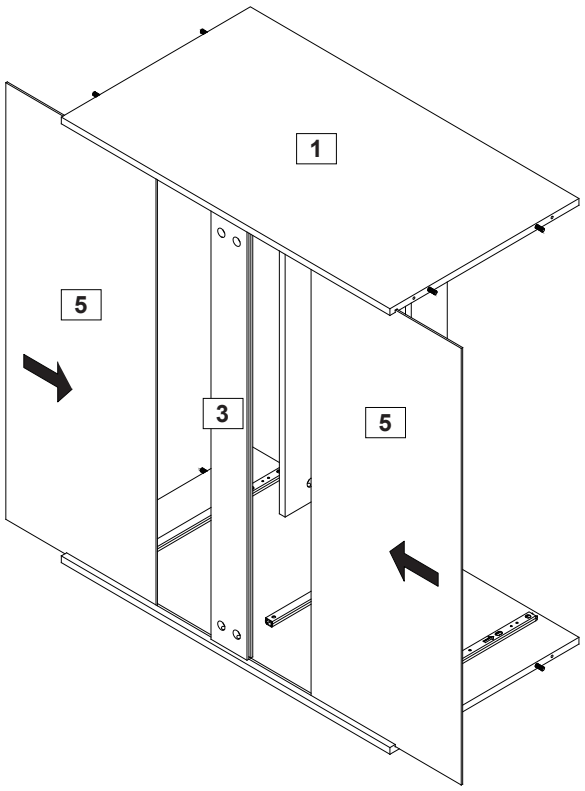

Slide panel (5) into the groove.

Step 7



CAM-LOCK
Tighten until shoulder is flush with panel.Do not overtighten or undertighten(see example below)

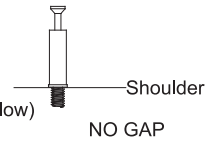

Screw the 2-in-1 connector bolts (A) into panel (6).

Assembly Instructions

Step 8

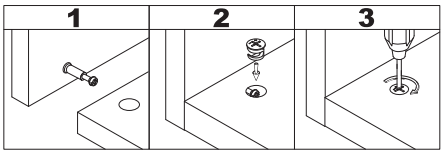

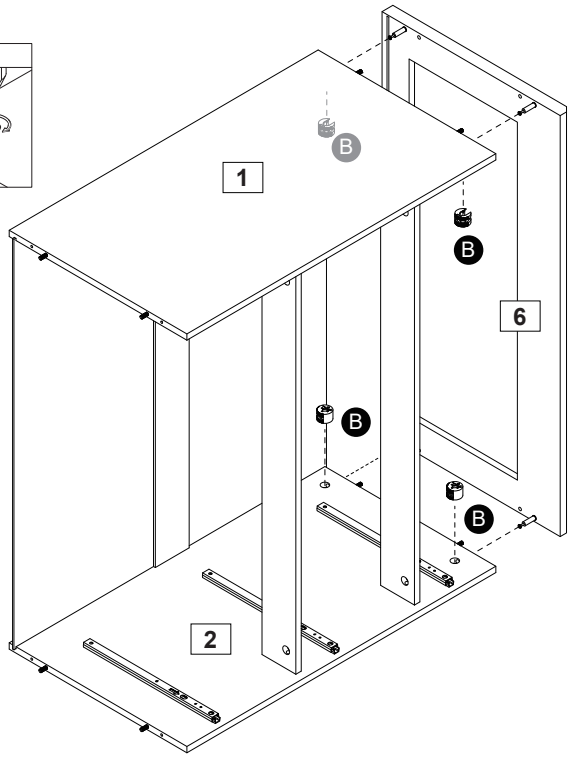

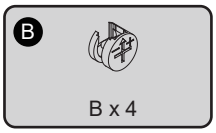

Connect panel (6) to panels (1) and (2). Insert the cam locks (B) into panels (1) and (2) and tighten.

Step 9

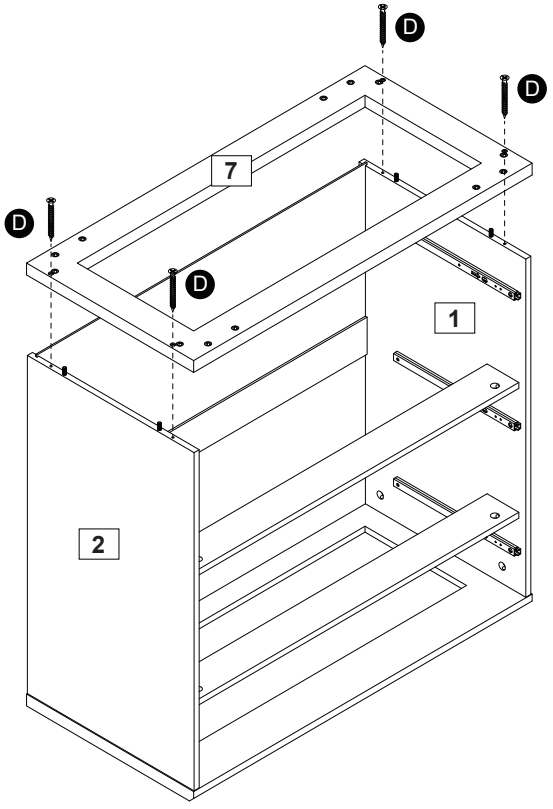

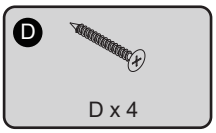

Attach panel (7) to panels (1) and (2) using screws (D).

Assembly Instructions

Step 10

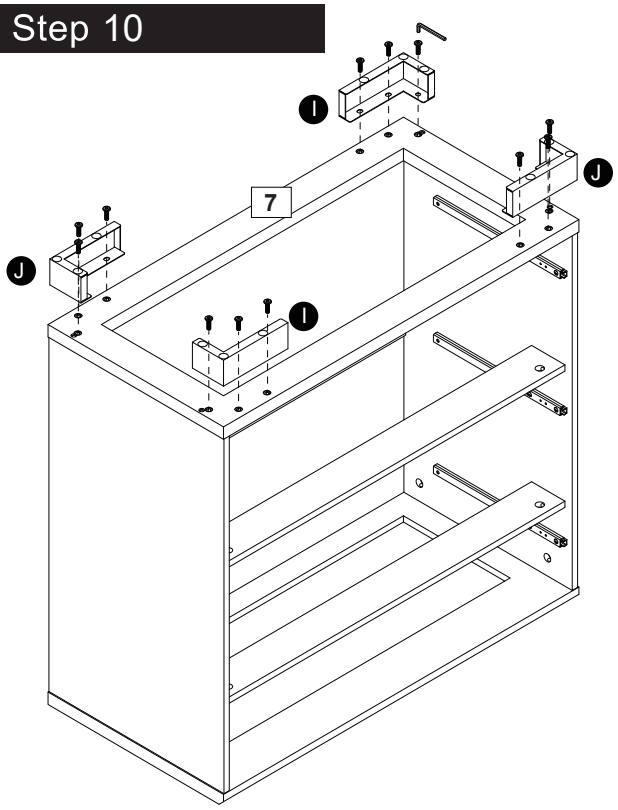

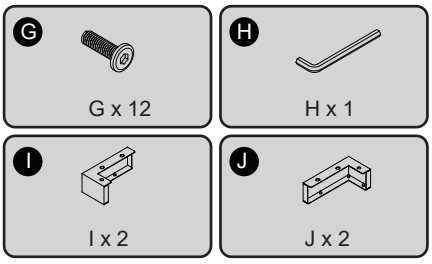

Tighten all bolts to 80% first, then to 100%.

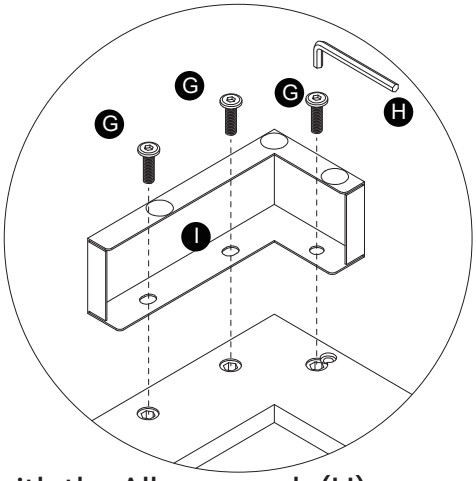

Attach parts (I) and (J) to panel (7)
using threaded rods (G), and tighten with the Allen wrench (H).

Step 11

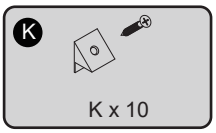

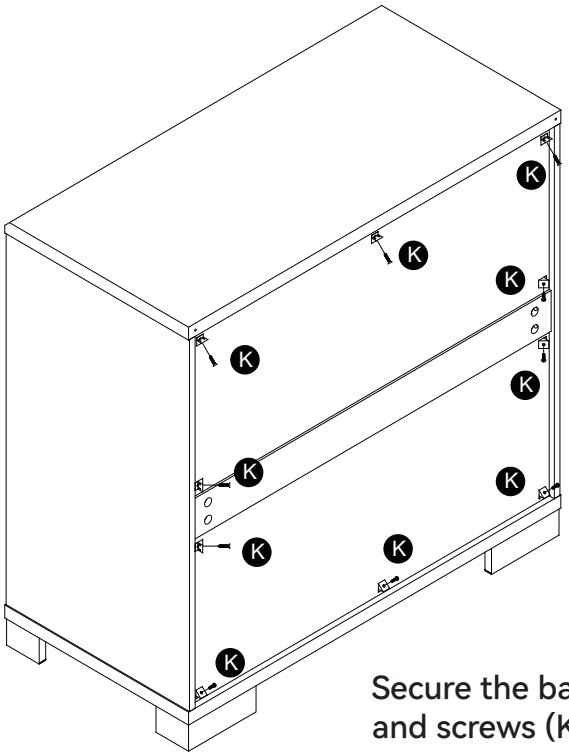

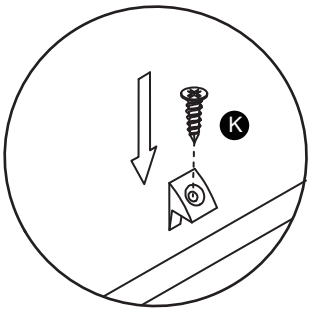

Secure the back panel using the back panel clips
and screws (K).

Assembly Instructions

Step 12

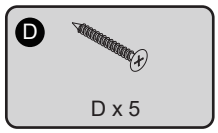

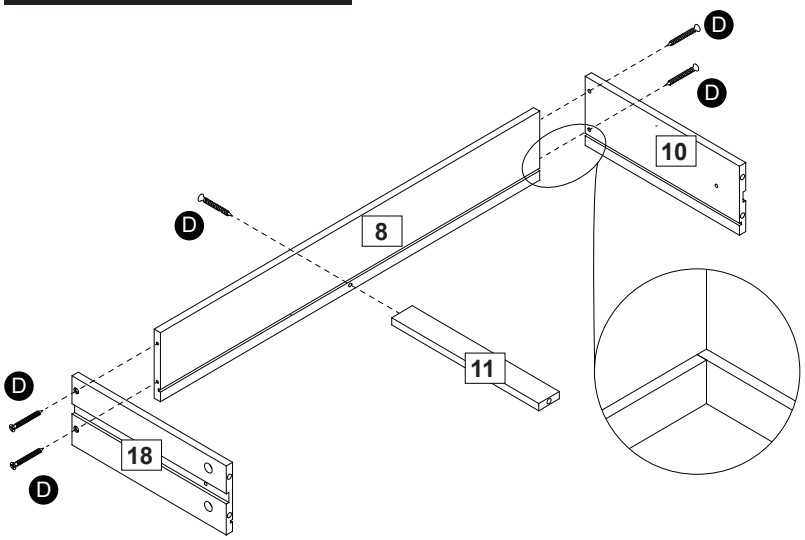

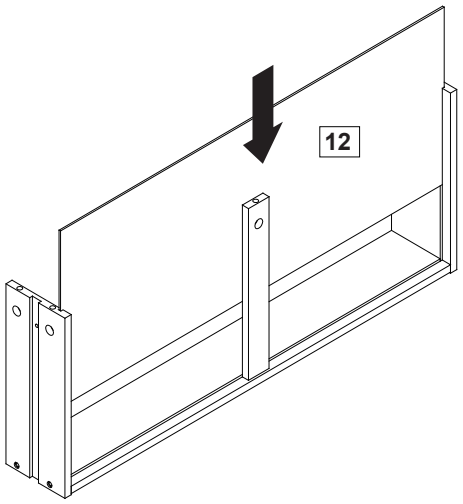

1. Attach panels (10), (11), and (18) to panel (8) using screws (D).
2. Slide panel (12) into the groove.

Step 13

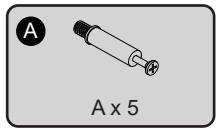

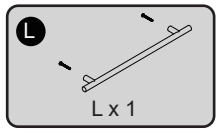

CAM-LOCK
Tighten until shoulder is flush with panel.Do not overtighten or undertighten(see example below)

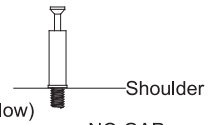

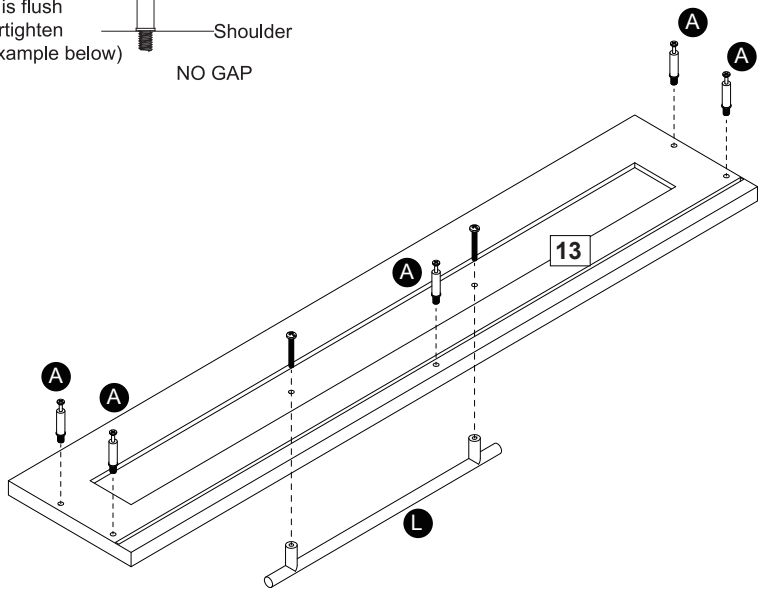

1. Screw the 2-in-1 connector bolts (A) into panel (13).
2. First loosen the screws on handle (L), then attach handle (L) to panel (13) and secure it.

Assembly Instructions

Step 14

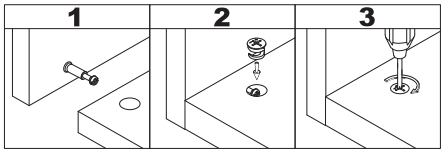

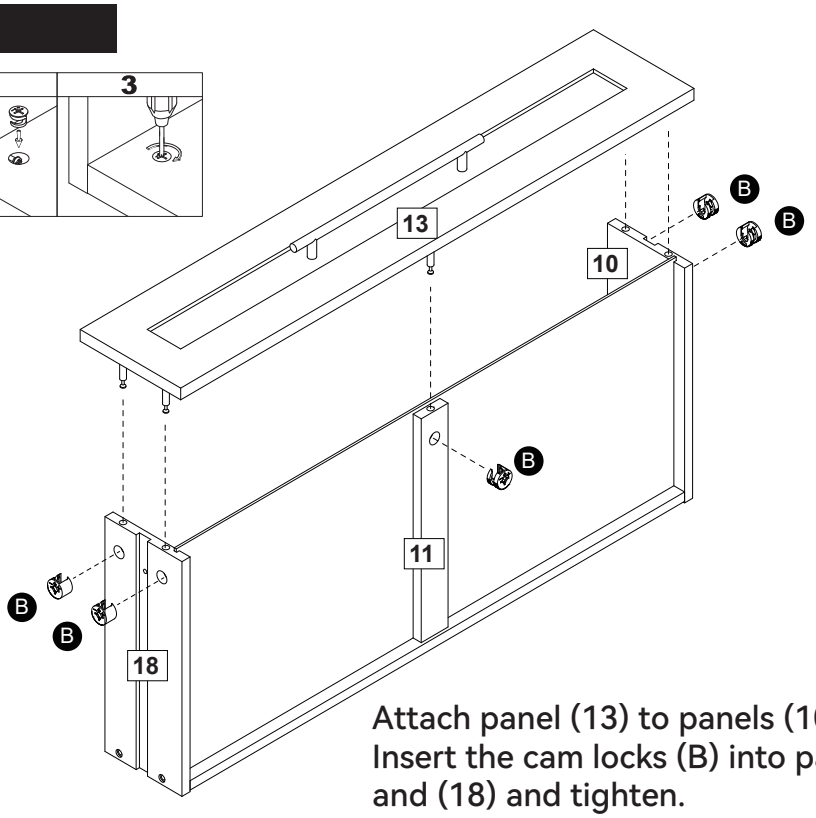

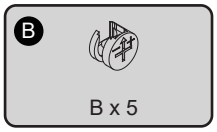

Attach panel (13) to panels (10), (11), and (18). Insert the cam locks (B) into panels (10), (11), and (18) and tighten.

Step 15

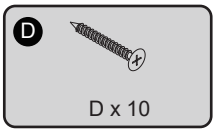

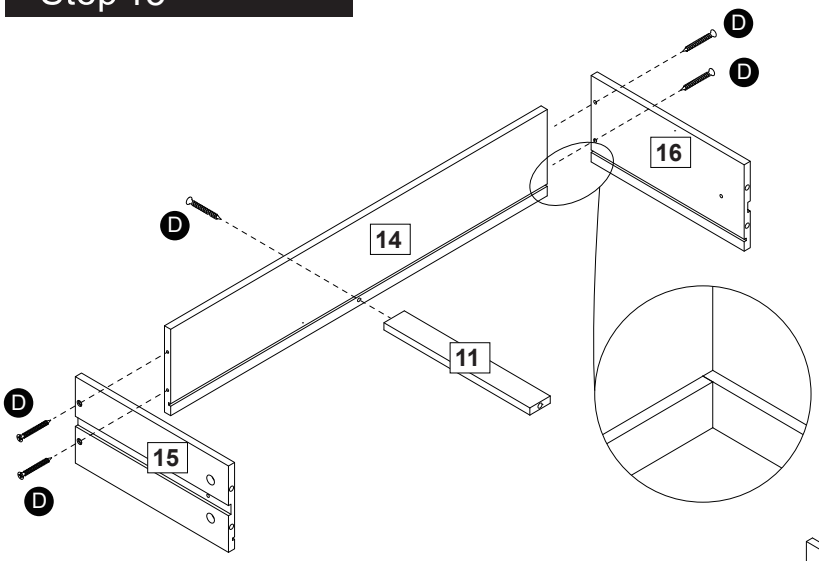

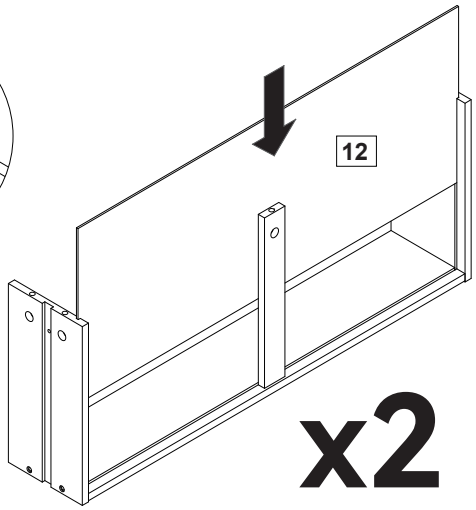

1. Attach panels (11), (15), and (16) to panel (14) using screws (D).
2. Slide panel (12) into the groove.

x2

Assembly Instructions

Step 16

CAM-LOCK
Tighten until shoulder is flush with panel.Do not overtighten or undertighten(see example below)

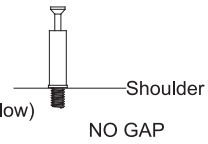

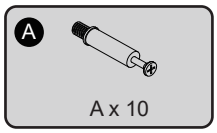

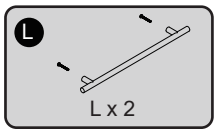

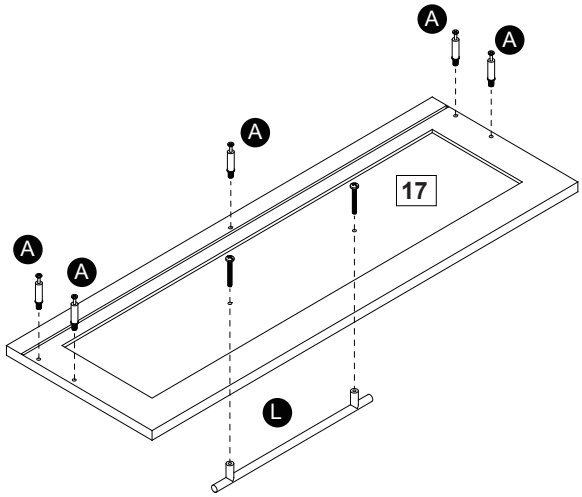

x2

1. Screw the 2-in-1 connector bolts (A) into panel (17).
2. First loosen the screws on handle (L), then attach handle (L) to panel (17) and secure it.

Step 17

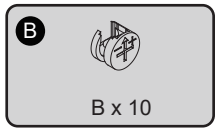

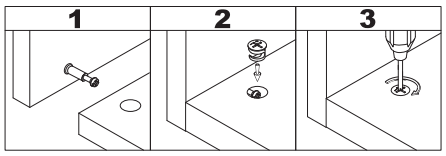

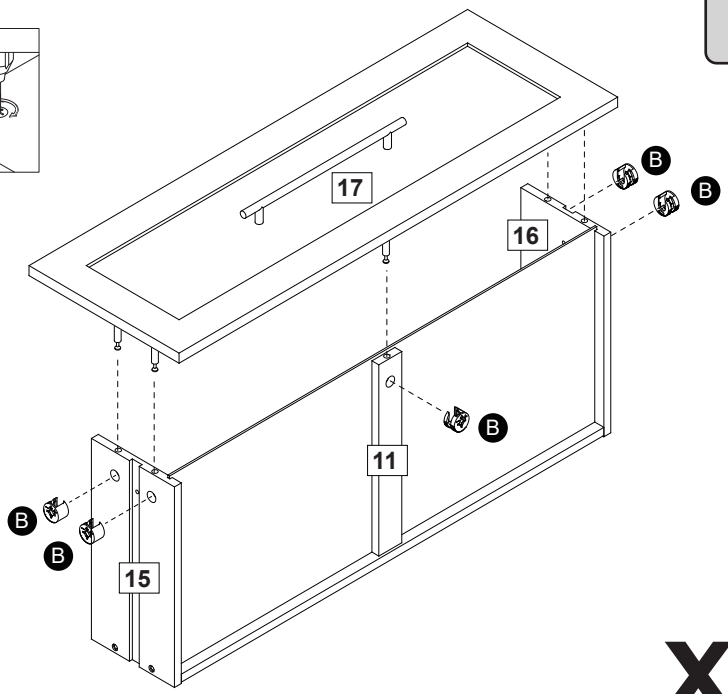

x2

Attach panel (17) to panels (11), (15), and (16).
Insert the cam locks (B) into panels (11), (15), and (16) and tighten.

Assembly Instructions

Step 18

As shown, slide the drawer slides (F) into the grooves on both sides of the drawer, and push them all the way toward the drawer front.

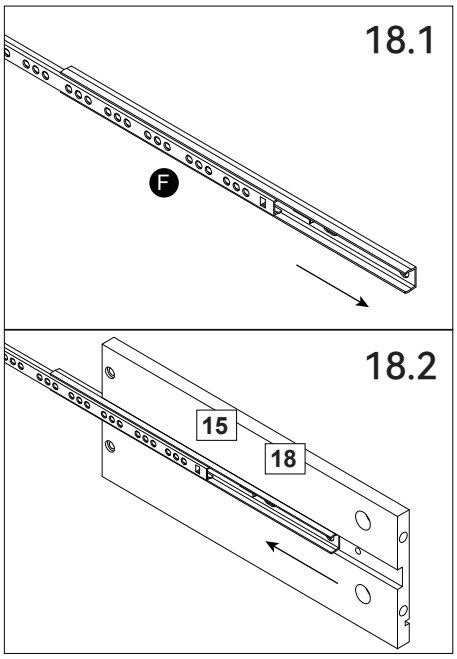

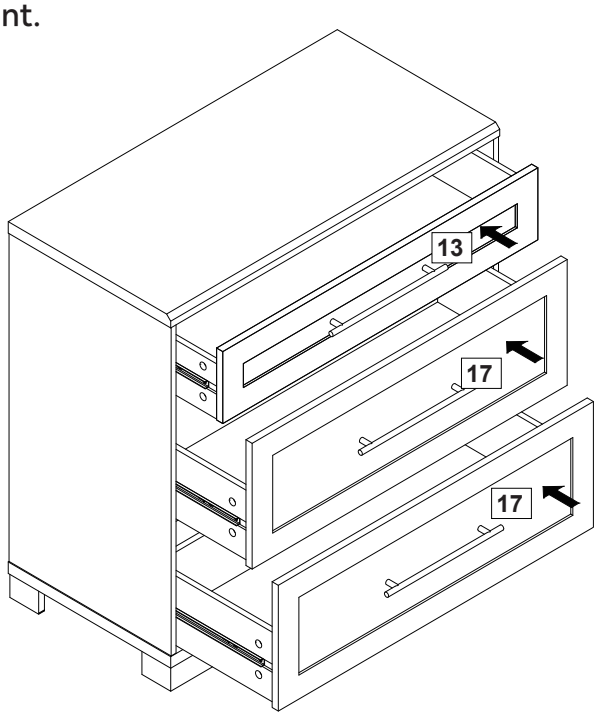

Step 19

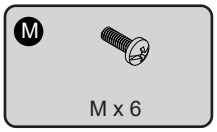

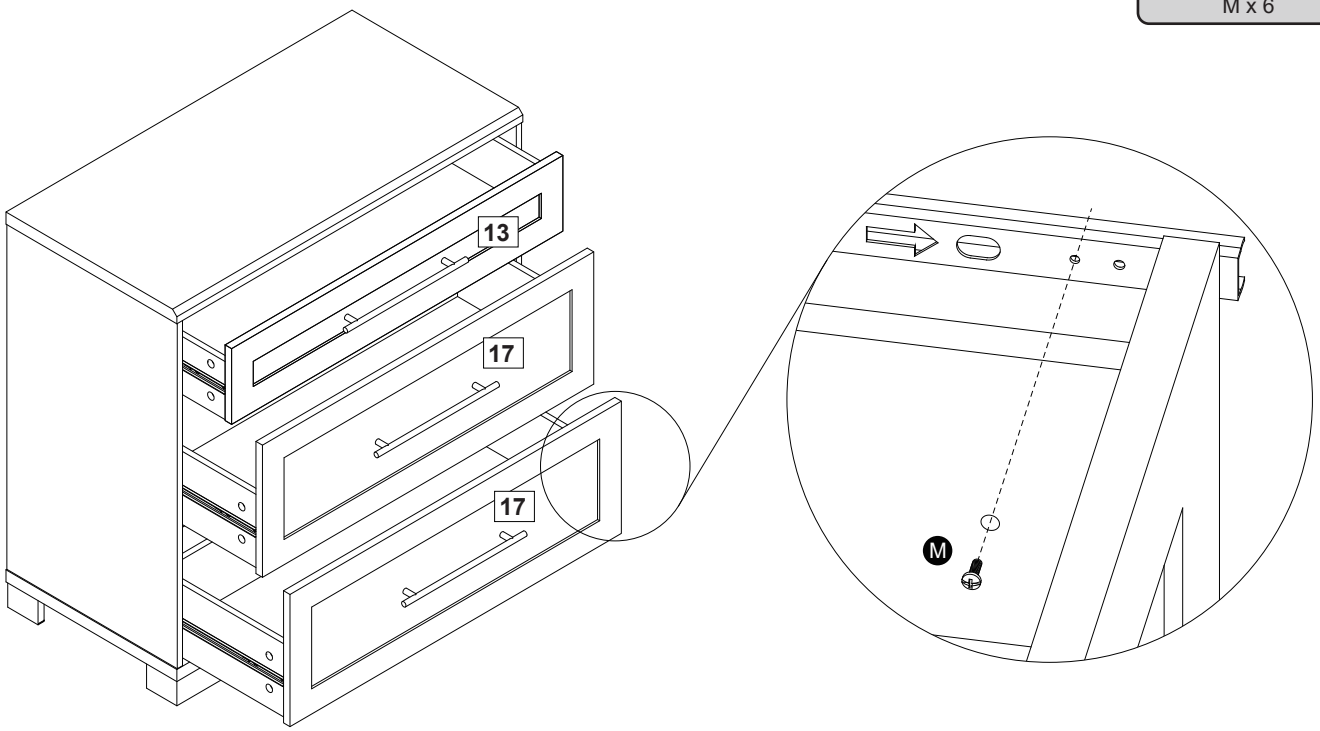

Secure the drawer slides (F) to the drawer using screws (M).

Assembly Instructions

Step 20

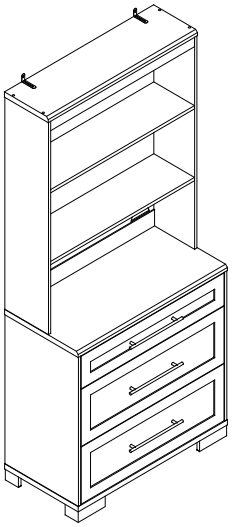

IMPORTANT:

With Bookcase Installed:
After securely fastening the bookcase to the cabinet, secure the bookcase to the wall using the supplied anti-tip hardware. A separate wall attachment for the cabinet is not required.

Without Bookcase:
The cabinet must be secured to the wall using the supplied anti-tip hardware.

The unit is floor standing, but it is recommended that the unit is secured to the wall.

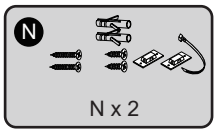

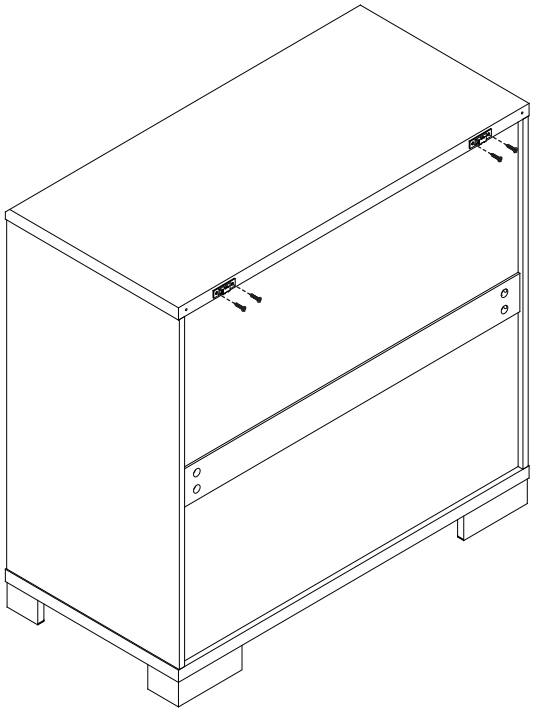

1. Move the unit into desired position.

2. Mark the wall with a suitable scribe the position of the fixing holes.

Warning:
Before driling,check wall for hidden pipes and cables.

3. Drill holes and insert 2 x wall plug

4. Attach 2 x Wall Straps to to the top of the unit using 2 x Washers and 2 x Screws

5. Secure the straps to the wall using 2 x Washers and 2 x Screws

Note: To hide the straps behind the unit, drill the holes lower than the top of the unit

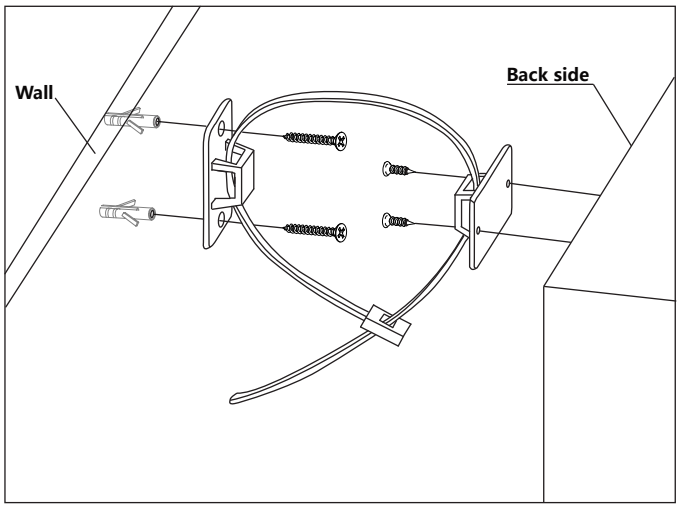

As shown, the anti-tip hardware (N) must be installed to prevent the cabinet from tipping over.

A Guide to Wall Mounting & Fixings

Important note:

If plastic wall plugs (rawl plugs) are supplied with your product, e.g.:



- these are only suitable for use in masonry walls.

If you are in any doubt about the correct wall plugs for your wall, seek professional advice.

Failure of the product due to using the incorrect fixings is the responsibility of the installer.

Important: when drilling into walls always check that there are no hidden wires or pipes etc.

Make sure that the screws and wall plugs being used are suitable for **supporting your unit. Consult a qualified tradesperson if you** are unsure.

Hints:

1: General rule: always use a larger screw and wall plug if you are not sure.
2: Ensure you use the recommended drill bit to match the wall plug and hole size.
3: Ensure you drill the hole horizontally; do not force the drill or enlarge the hole.
4: Take extra care when drilling high walls, ceilings and ceramic tiles. Ensure wall plugs are inserted beyond the thickness of the ceramic tiles to avoid the tiles splitting or cracking.
5: Ensure wall plugs are well fitted and are a tight fit in the drilled hole.

Types of walls

You can use one of the following types of wall plug if your walls are made of brick, breeze block, concrete, stone or wood.

No.1 "General Purpose" wall plug

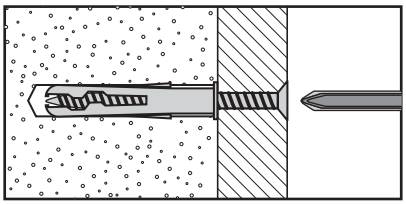

Generally aerated blocks should not be used to support heavy loads, use a specialist fitting in this case. For light loads, general purpose wall plugs can be used.

No.2 " Plasterboard" wall plug

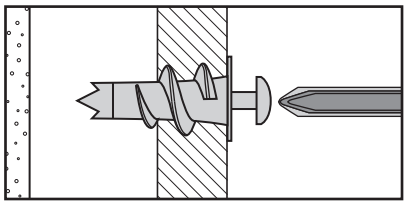

For use when attaching light loads onto plasterboard partitions.

No.3 "Cavity Fixing" wall plug

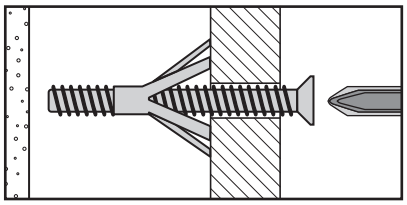

For use with plasterboard partitions or hollow wooden doors.

No.4 " Cavity Fixing – Heavy Duty" wall plug

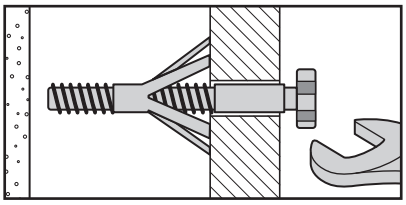

For use when fitting or supporting heavy loads such as shelving, wall cabinets and coat racks.

No.5 "Hammer Fixing" wall plug

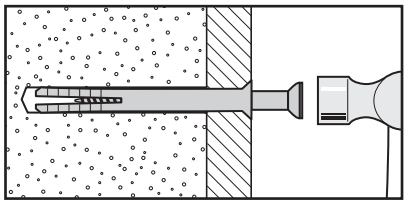

For use with walls stuck with plasterboard. The hammer fixing allows it to be fixed to the wall rather than the plasterboard. Always check the fixing is secure to the retaining wall.

No.6 " Shield Anchor" wall plug – heavy loads

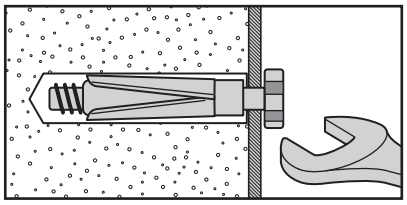

For use with heavier loads such as TV and HiFi speakers and satellite dishes etc.

Care & Maintenance

Safety: always check the fitting and location to ensure your safety in and around the home.

Fitting: from time to time check the fitting to ensure the wall plugs or screws do not become loose.

Modular Cabinet

SKU:
C002198070
C002198080

V1.0