626-679-3588
service@getprohome.com
www.getprohome.com
162 Atlantic St, Pomona, CA 91768

GETPRO®

SCAN ME

PRODUCT INSTRUCTION VIDEO

SIZE DETAILS

DOUBLE SLIDING SHOWER DOOR



SIZE DETAILS

SHOWER DOOR

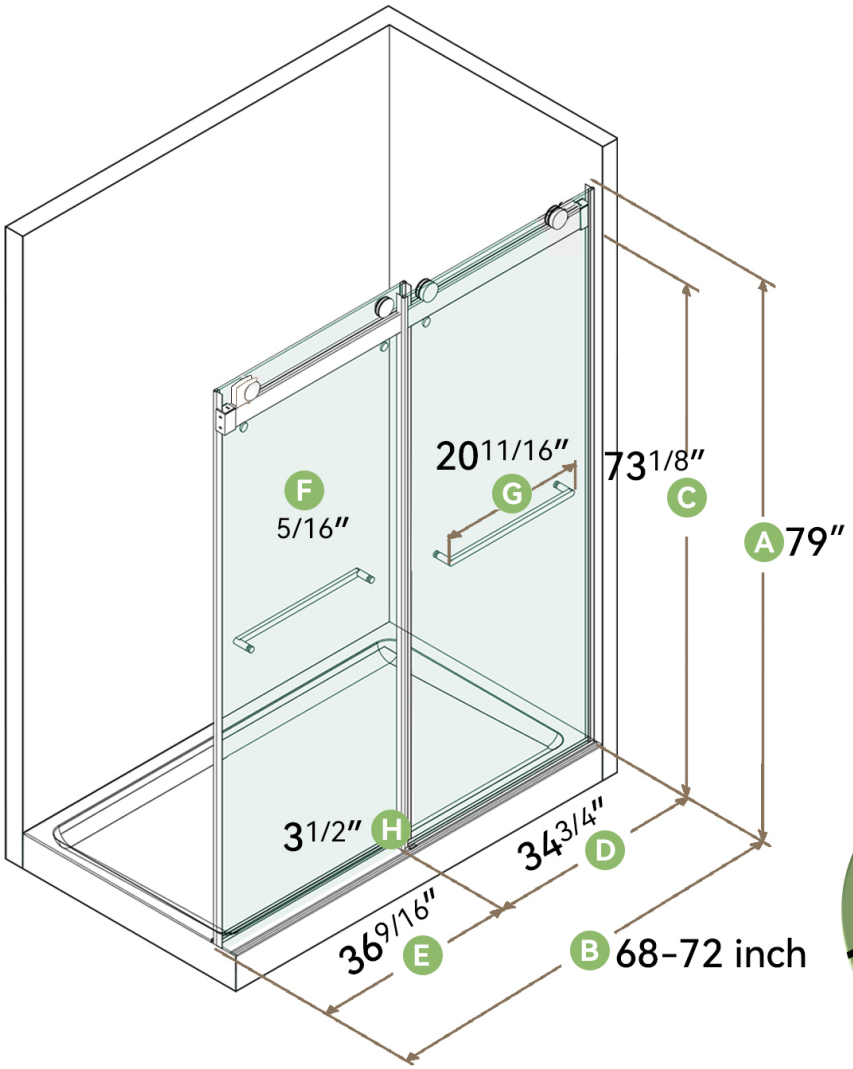

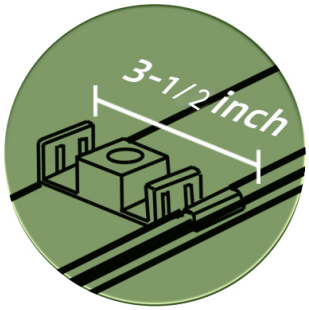

SHOWER DOORS INFORMATION

68-72 in Wx79 in H

- A Model Height
- B Model Width
- C Walk-in Height
- D Walk-in Width
- E Glass Door Width
- F Glass Thickness
- G Handle Width
- H Min.Base Width