154

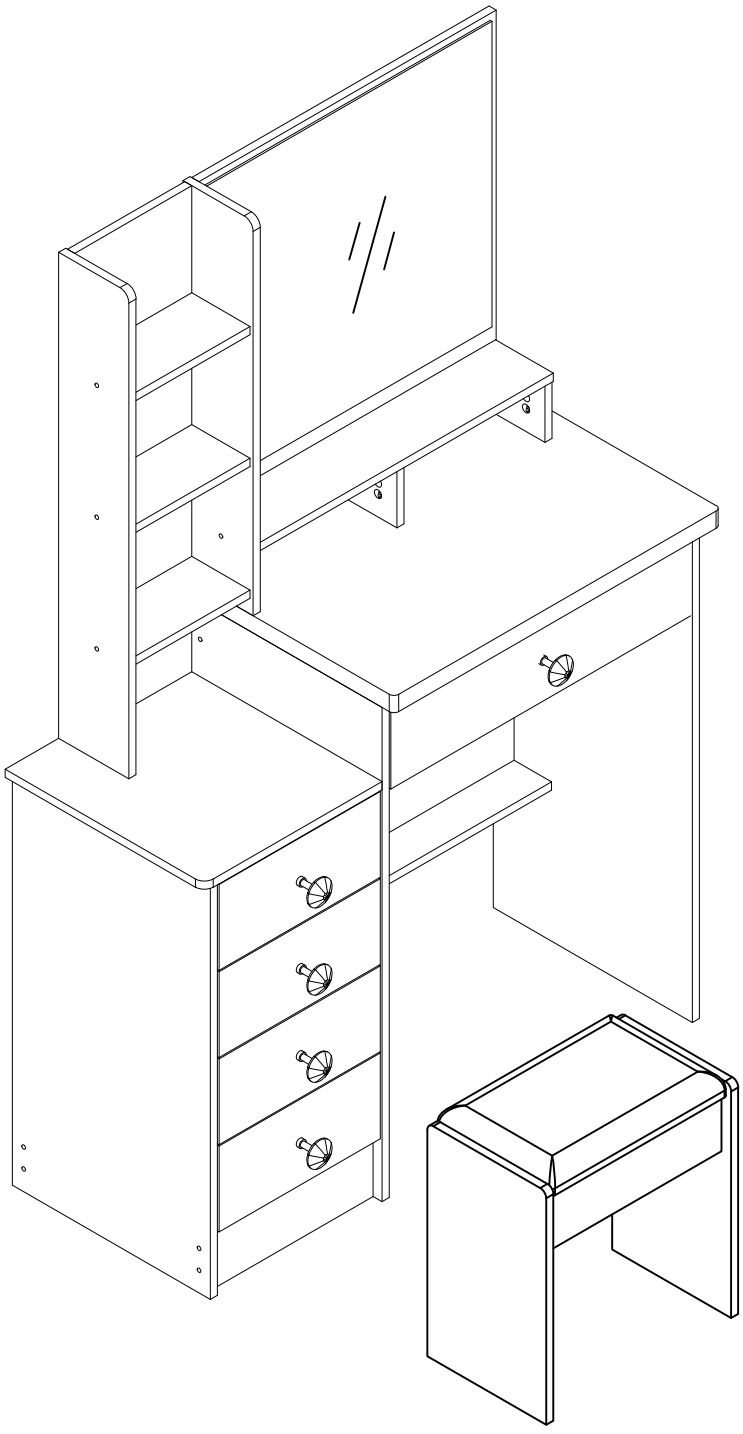

Since this product consists of multiple components, please read the assembly instructions carefully before installation. Use the tools properly and with caution. Should you have any questions about the product or installation, feel free to contact us. Our professional customer service team is available online all day long.

Part List

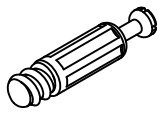		 3.5X12	 3.5X30
A x49	B x49	C x60	D x25

	 4X18	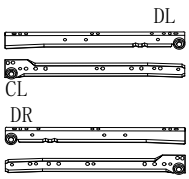 DL CL DR CR	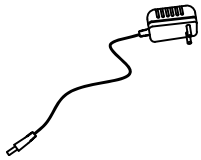
E x5	F x5	G x5	H x1

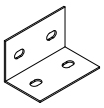	 5X45		
I x4	J x39	K x39	L x4

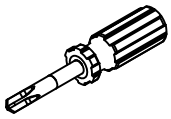
x1

Cam Lock Fastening System

Insert the cam bolt into the hole first, then insert the cam lock and lock it.

1

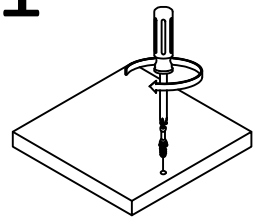

2

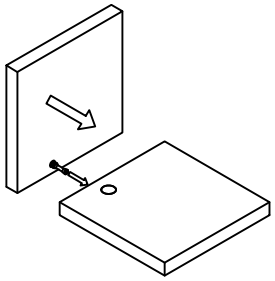

3

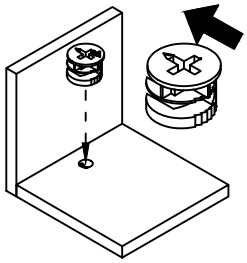

4

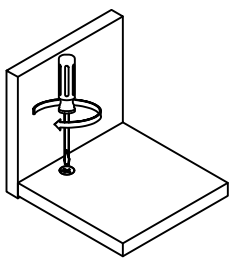

The opening must point toward the edge of the board

Board Identification

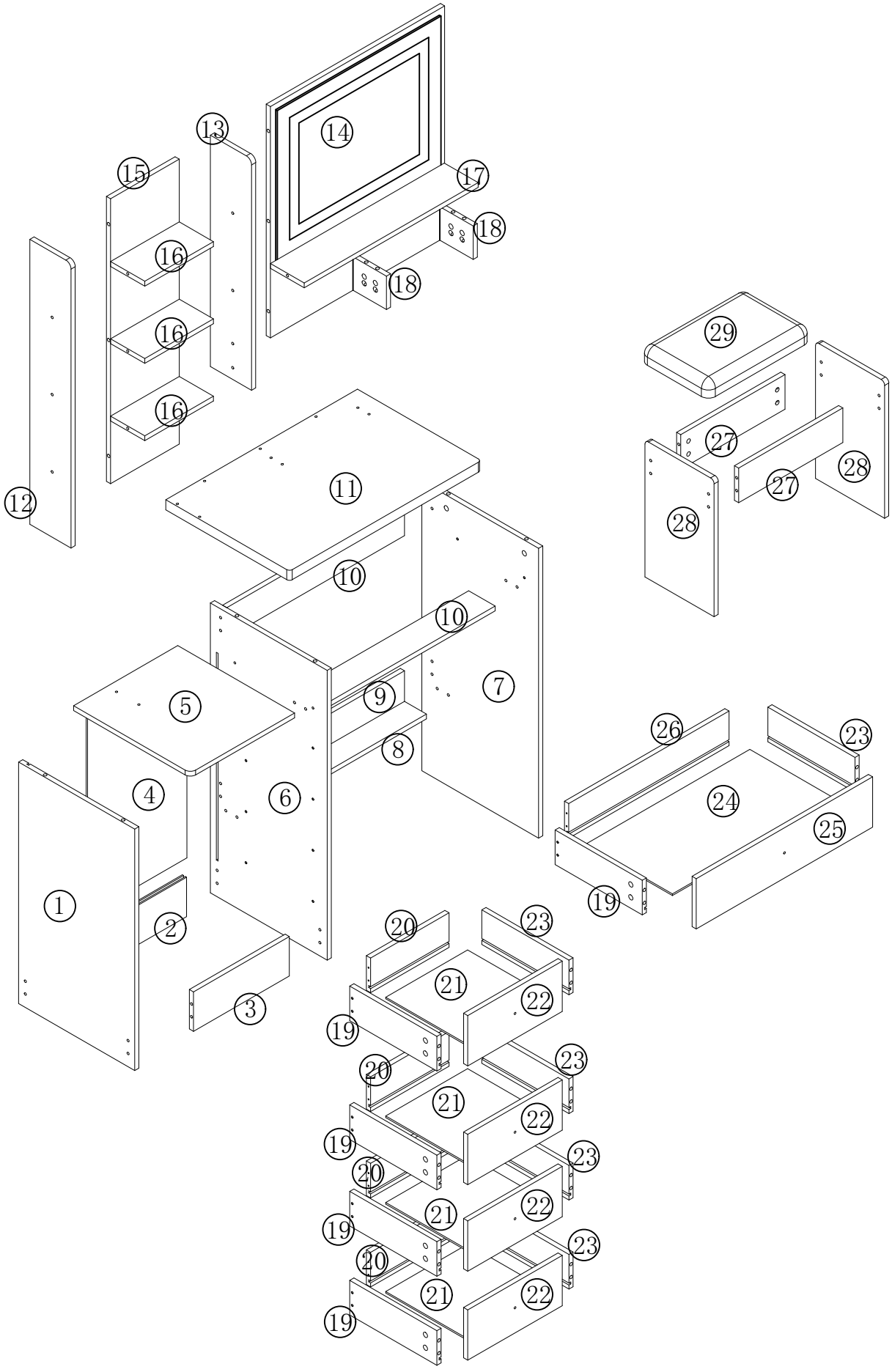

01

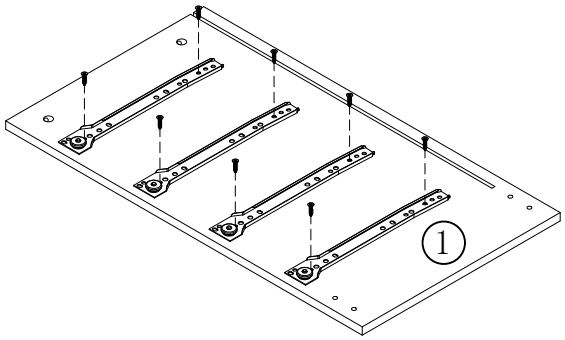

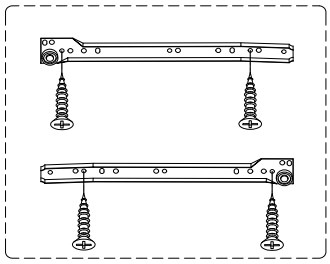

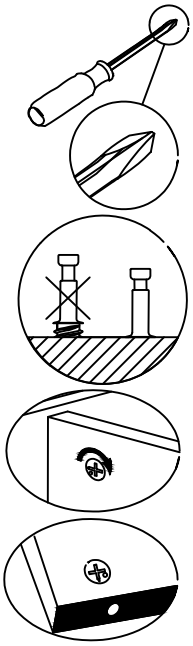

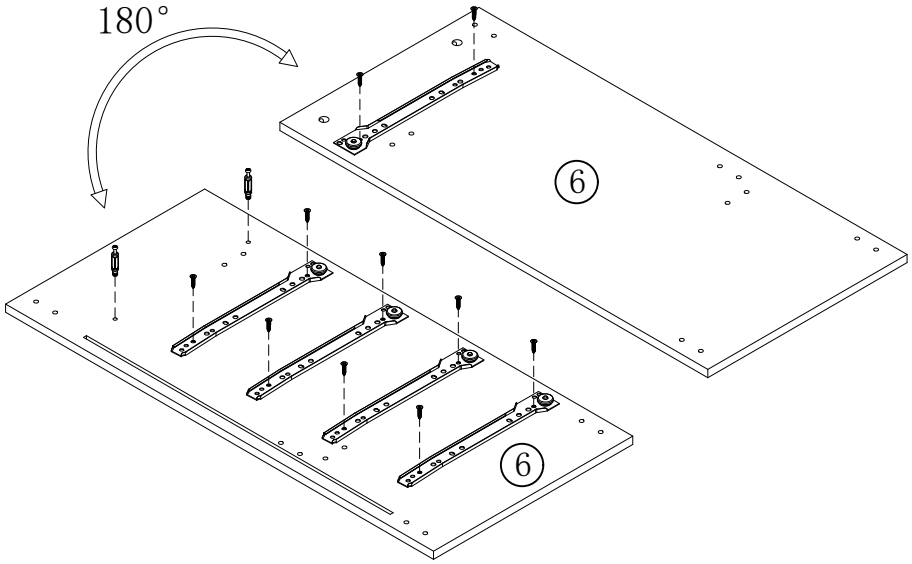

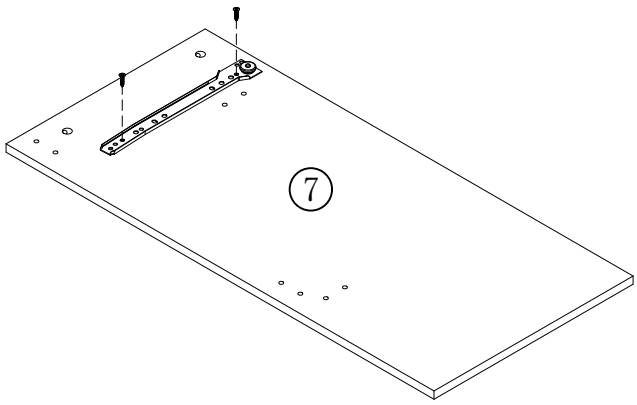

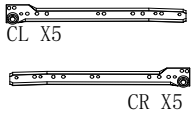		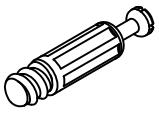
G x5	C x20	A x2

02

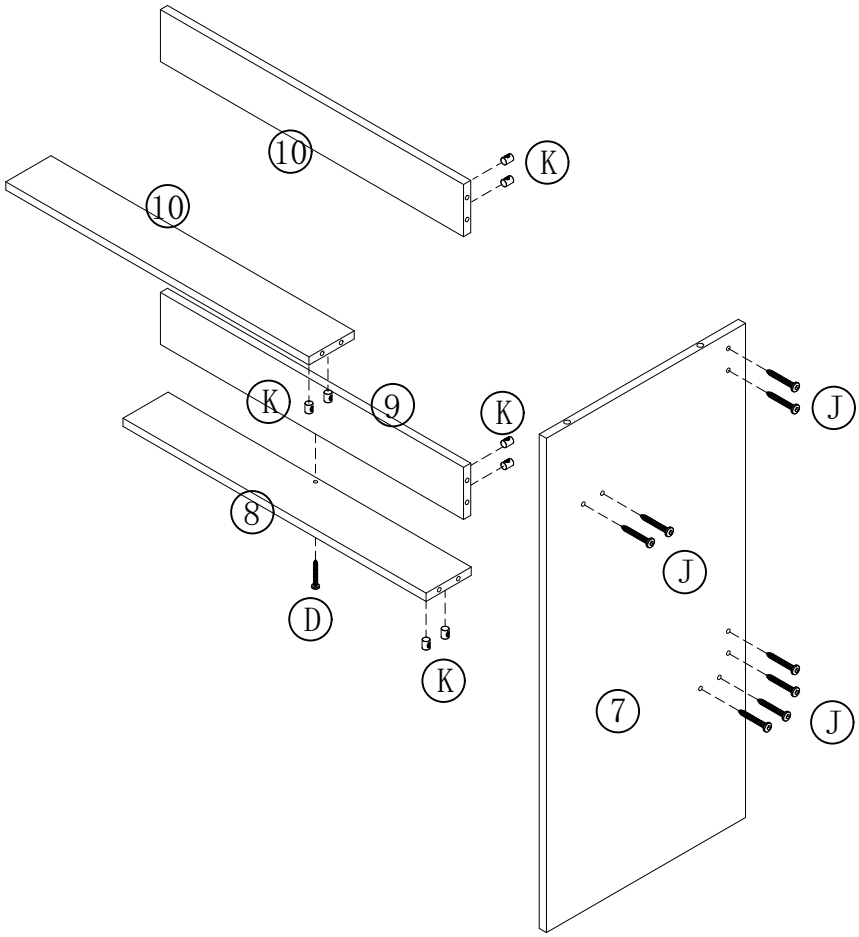

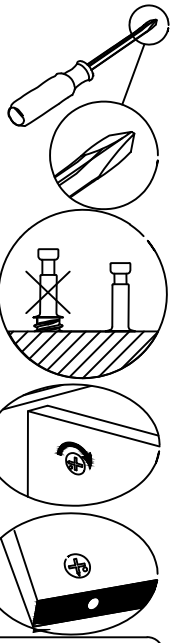



3.5X30	
D	x1

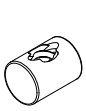

K	x8



J	x8

03

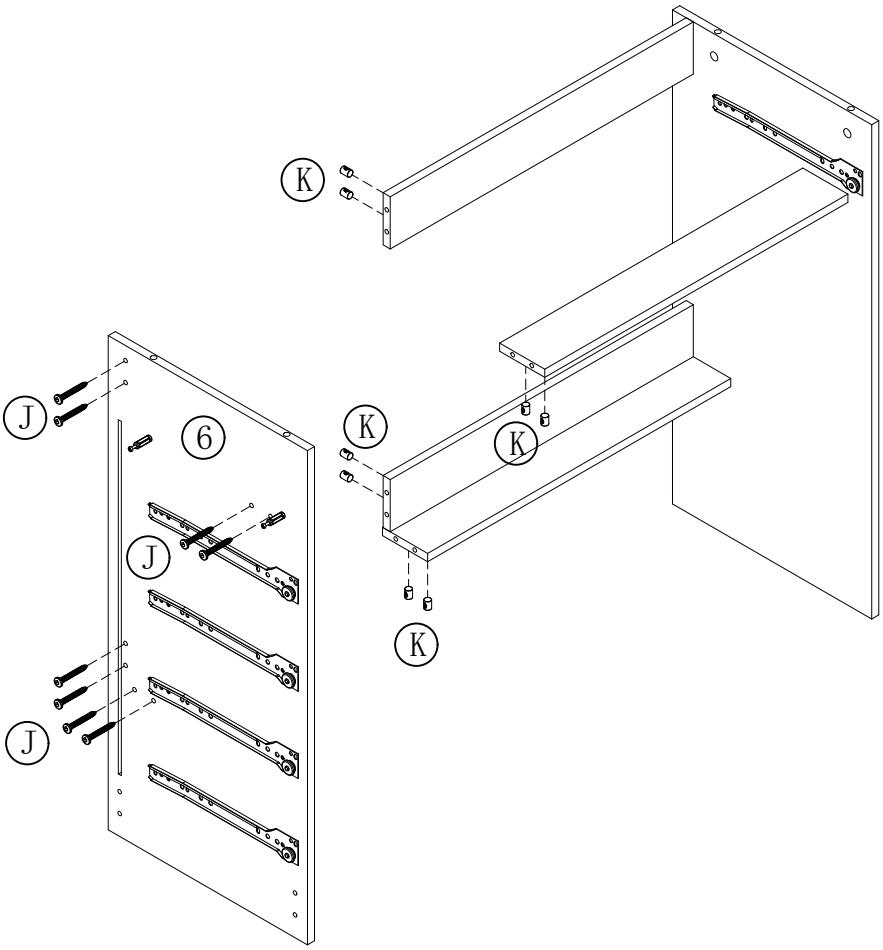

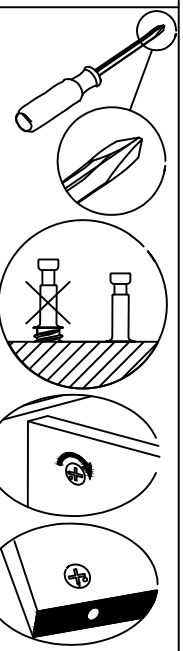



K	x8



J	x8

04

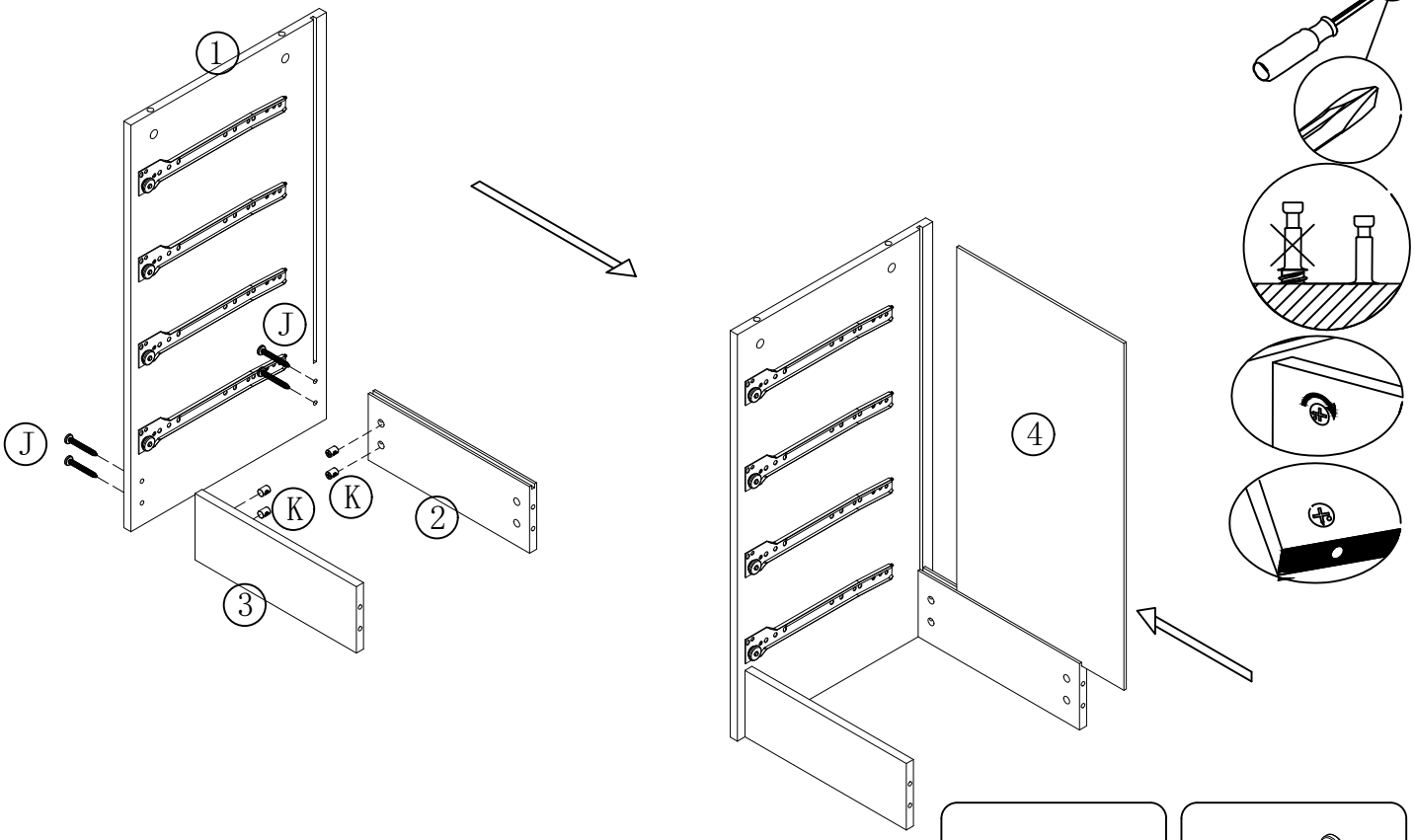

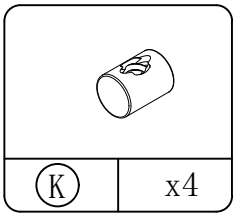

K	x4

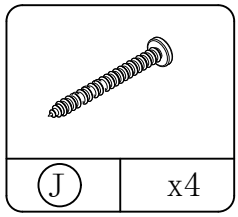

J	x4

05

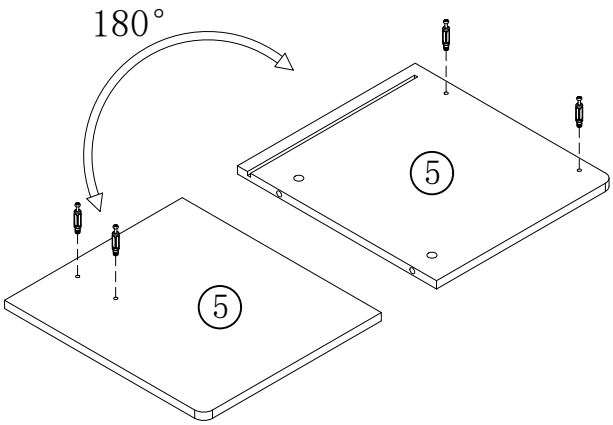

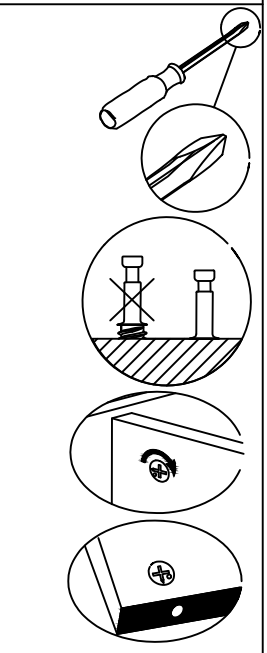

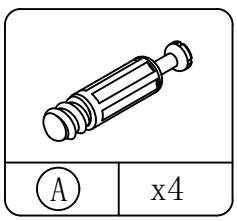

A	x4

06

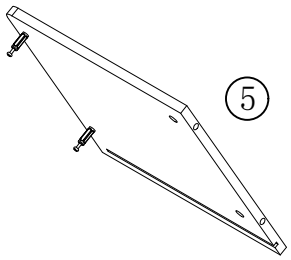

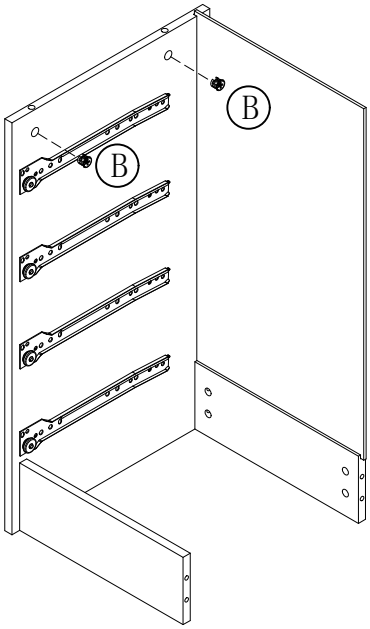

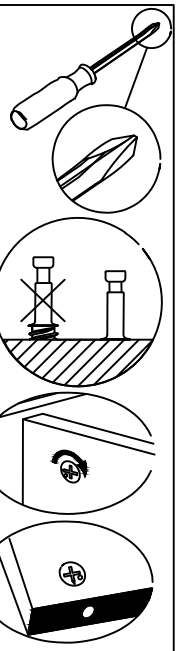

	
B	x2

07

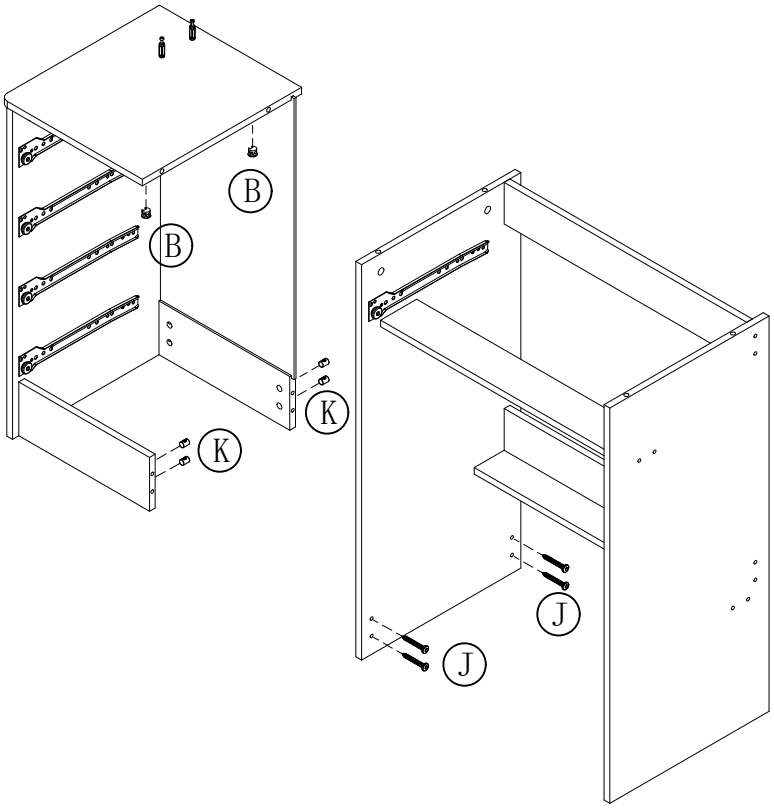

					
B	x2	K	x4	J	x4

08

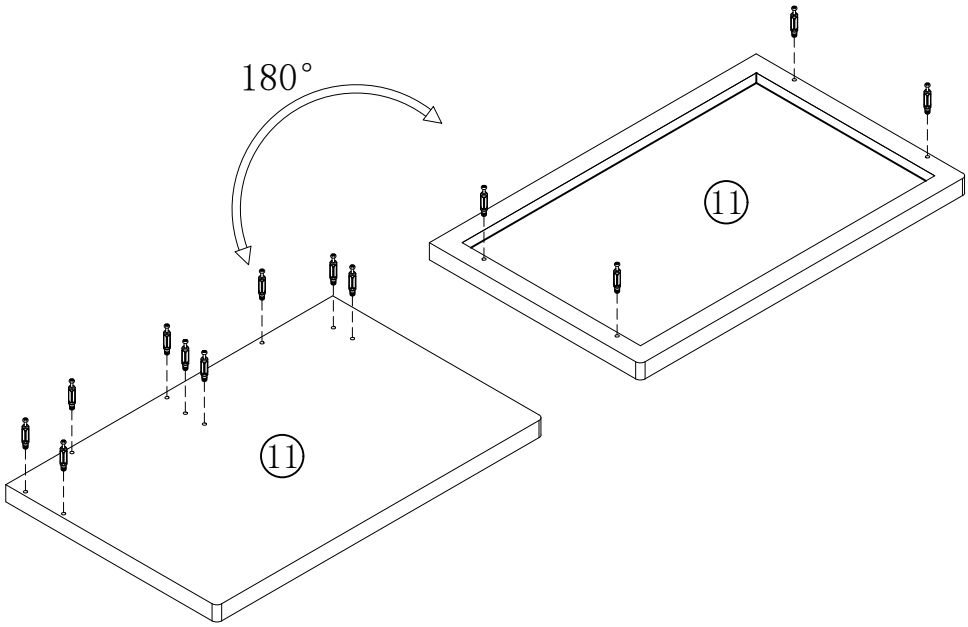

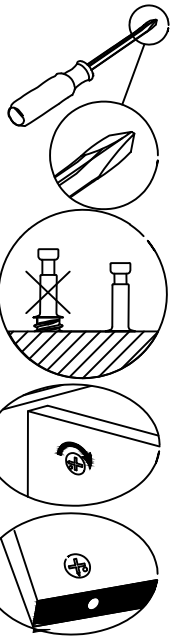

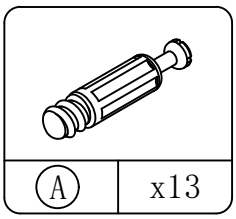

09

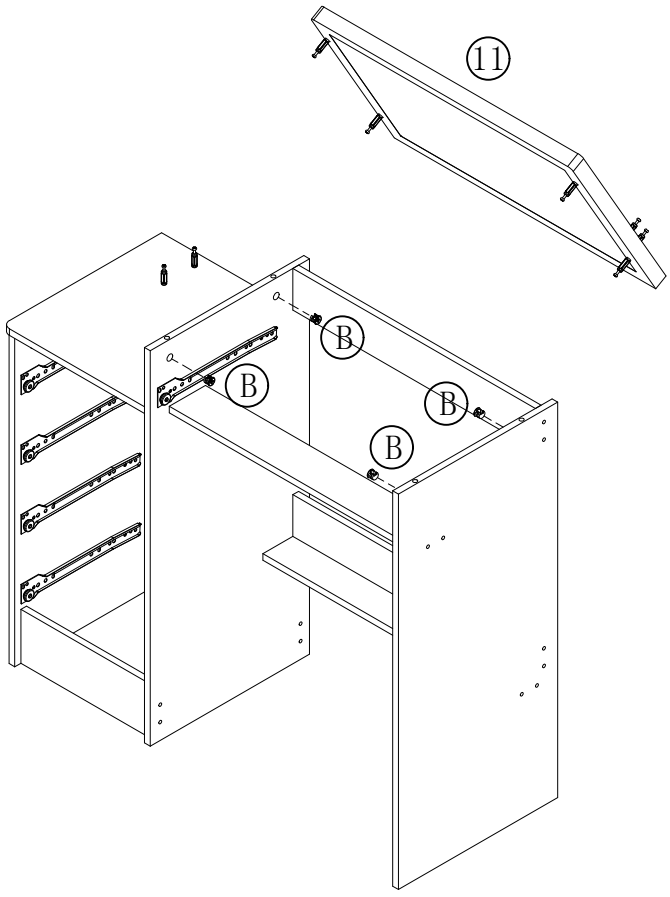

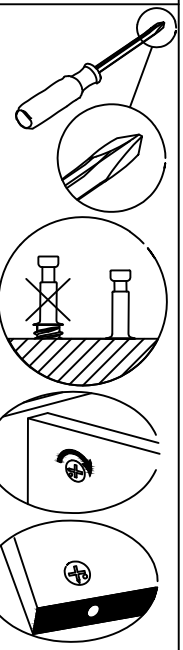

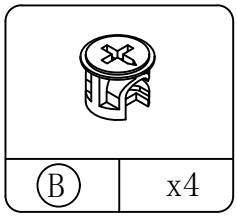

10

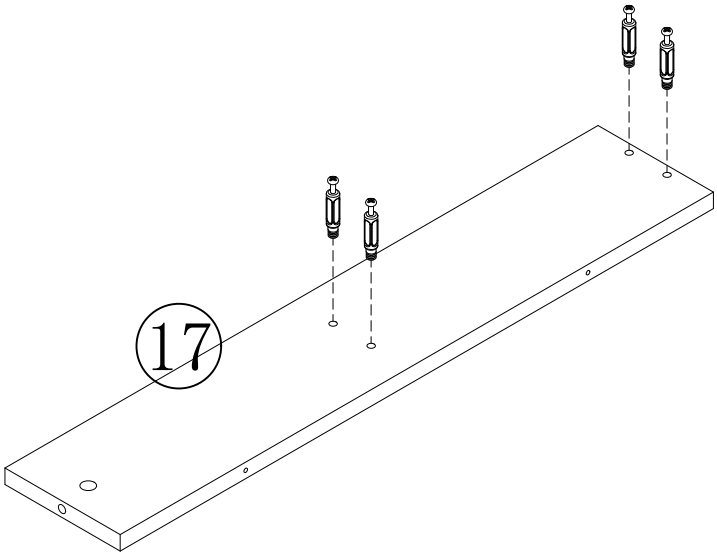

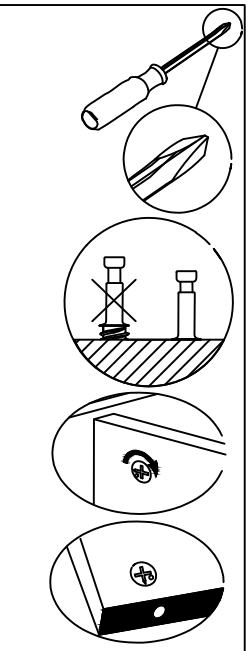

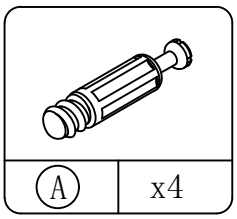

A	x4

11

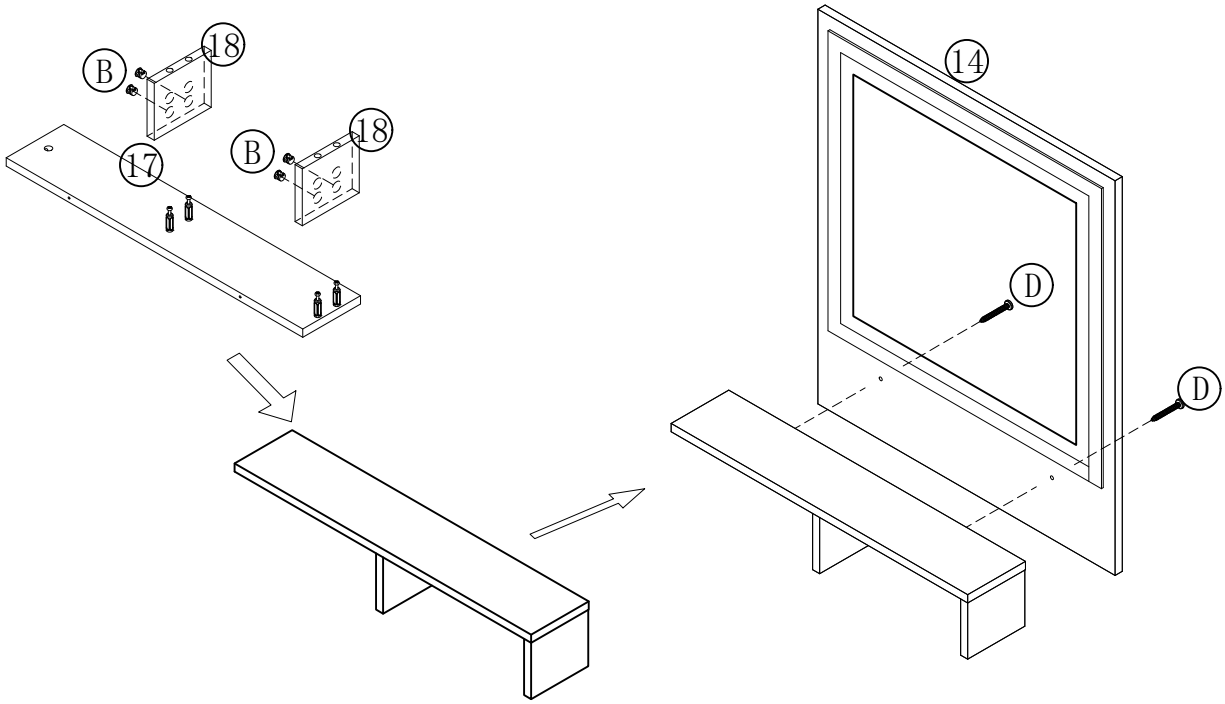

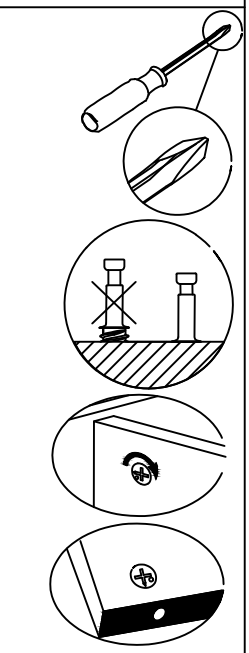



B	x4

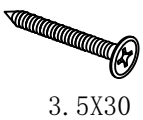

D	x2

12

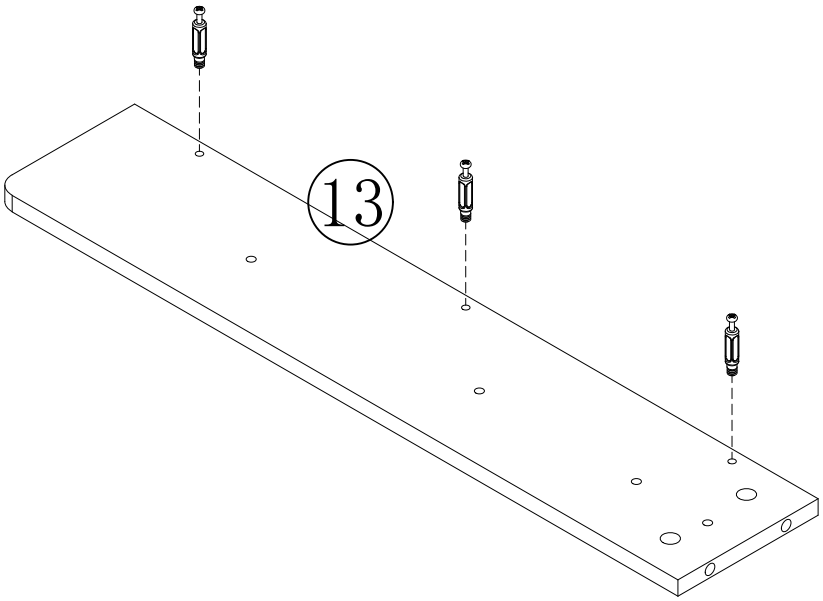

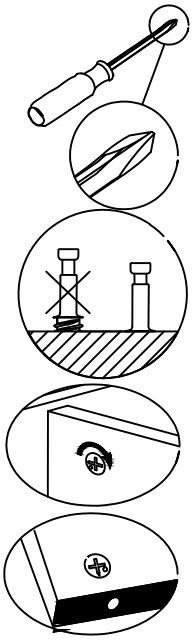



A	x3

13

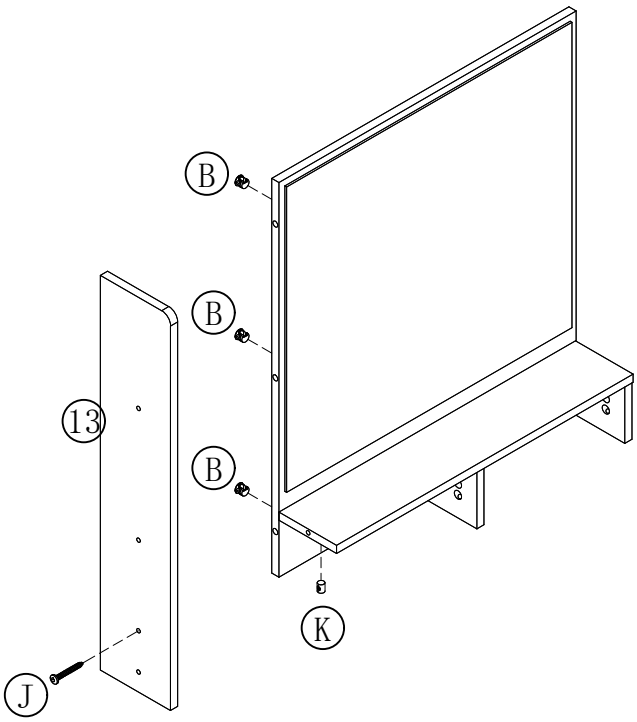

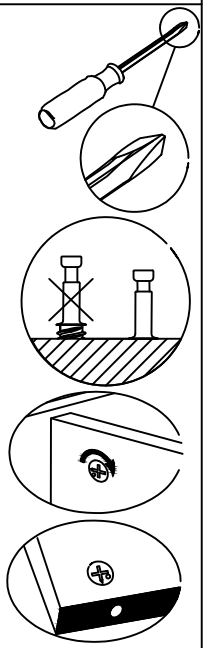



K	x1



J	x1



B	x3

14

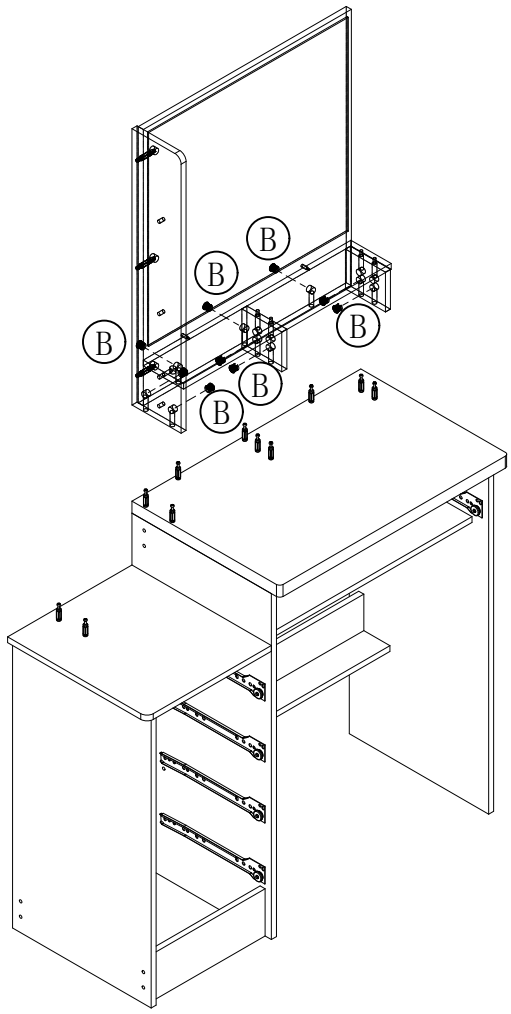

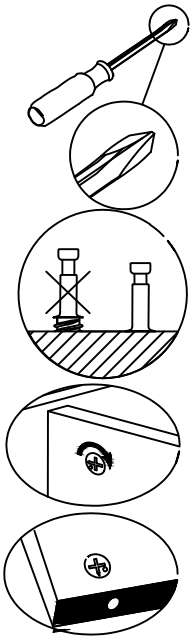

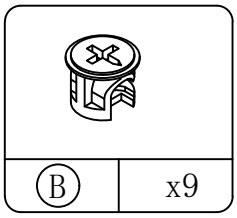

15

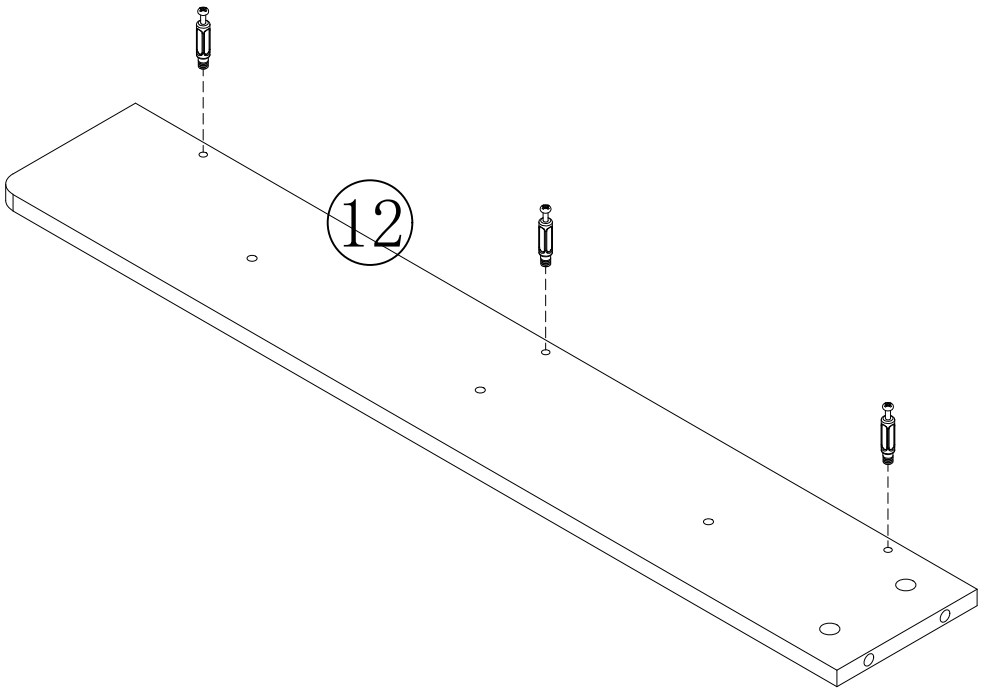

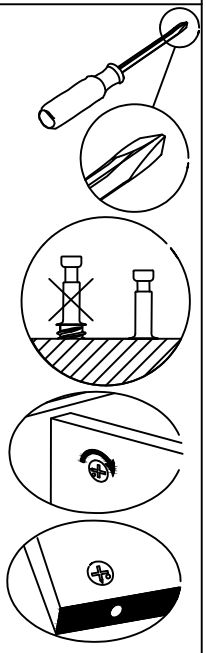

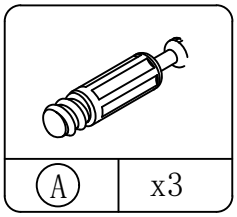

16

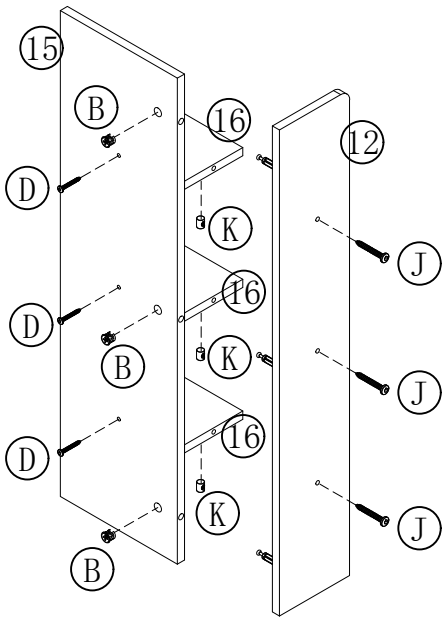

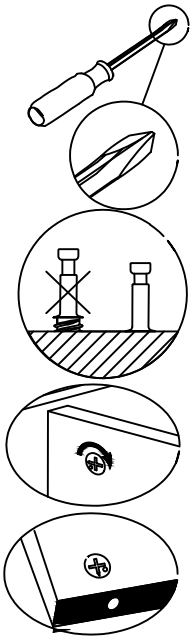

	
B	x3

	
K	x3

	
J	x3

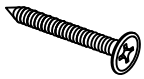	
3.5X30	
D	x3

17

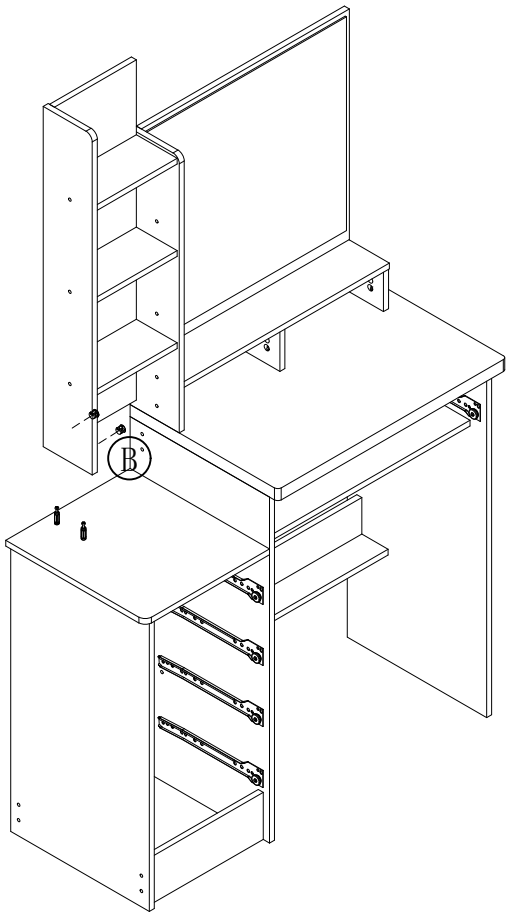

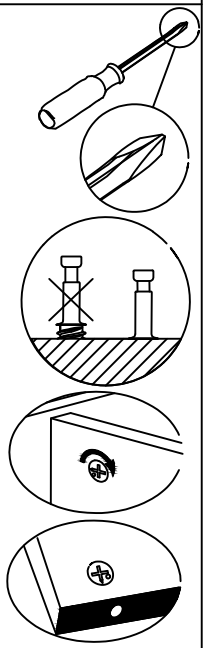

	
B	x2

18

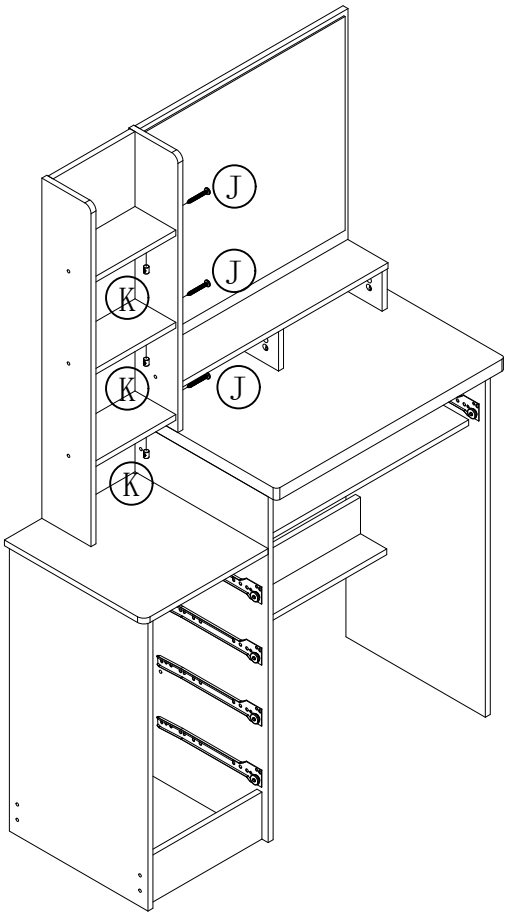

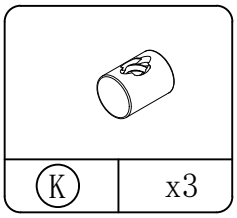

K	x3

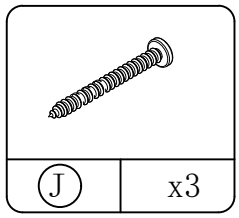

J	x3

19

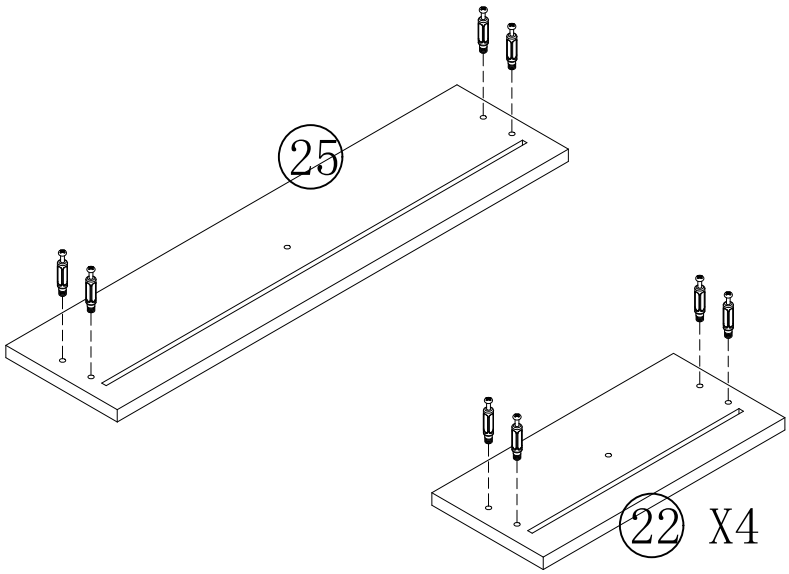

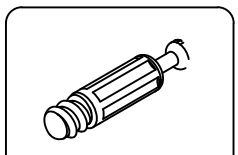

A	x20

20

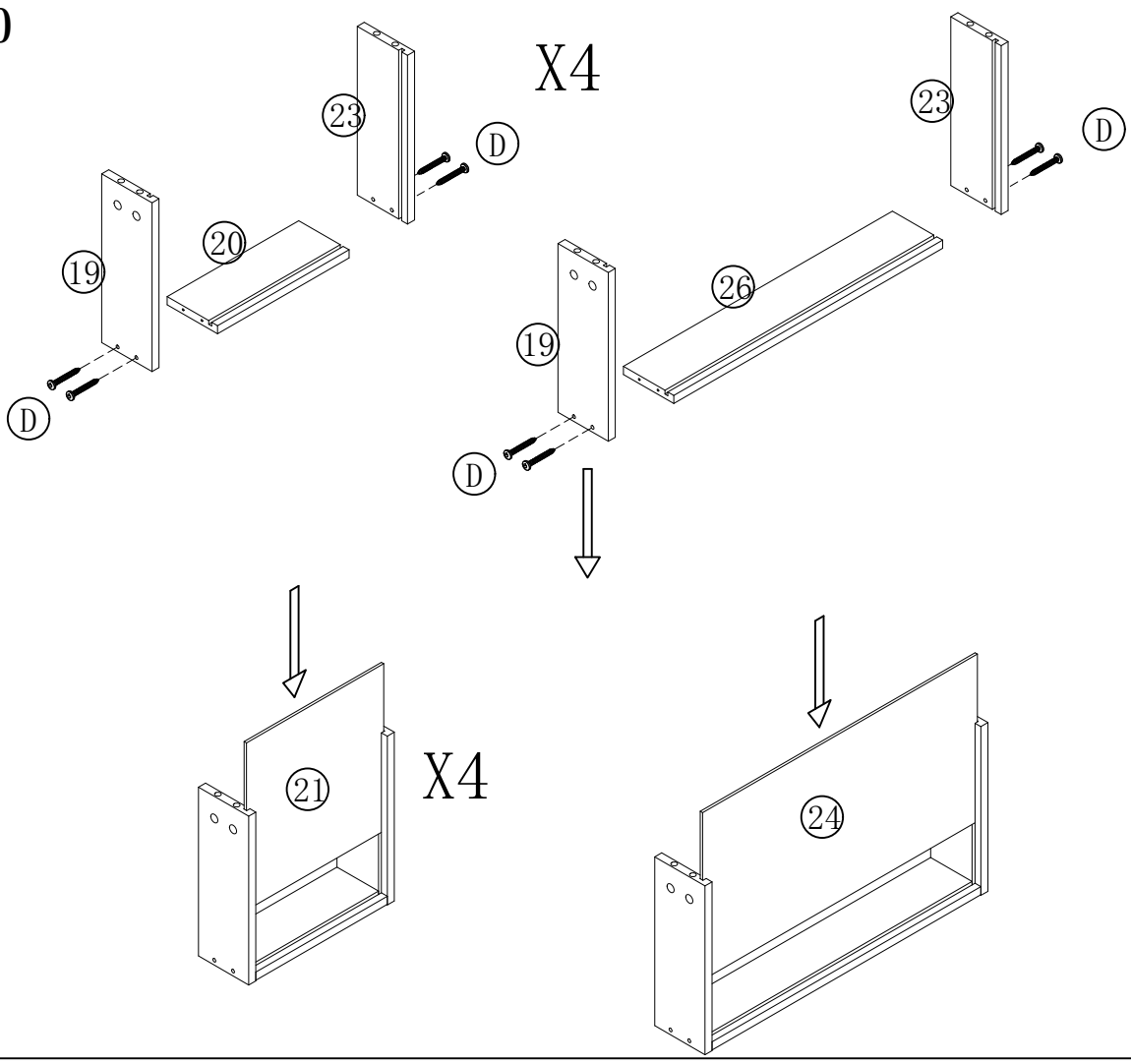

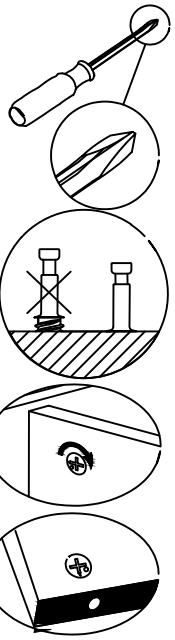

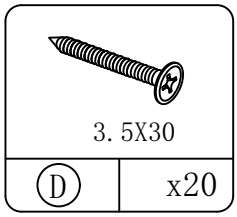

21

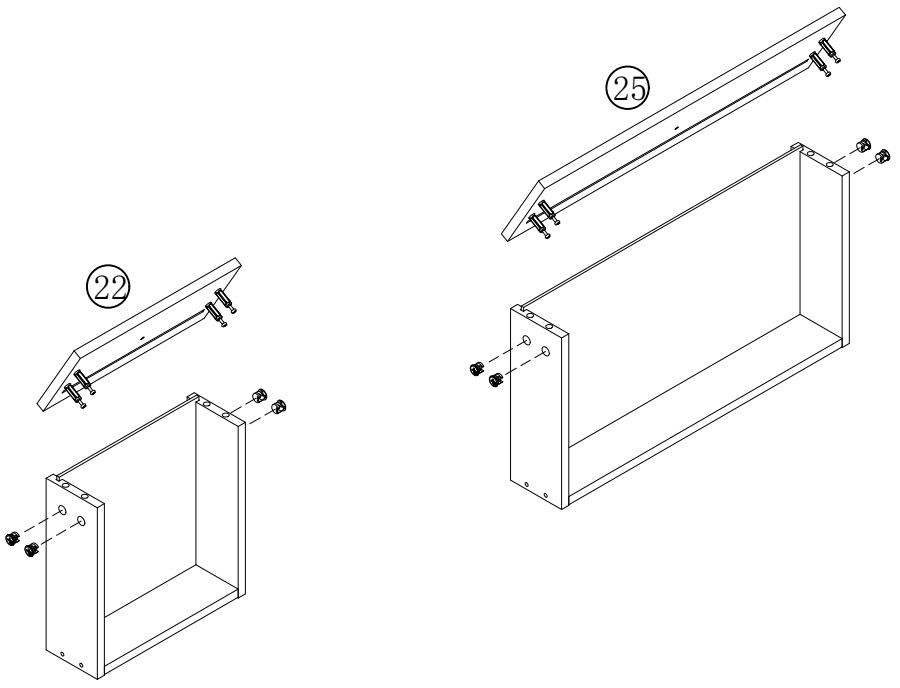

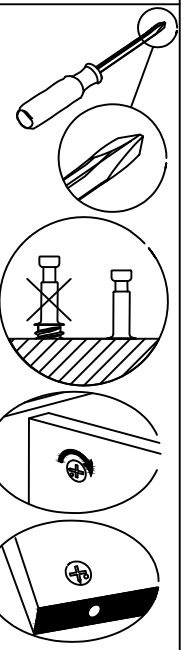

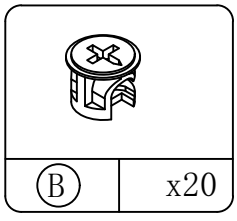

22

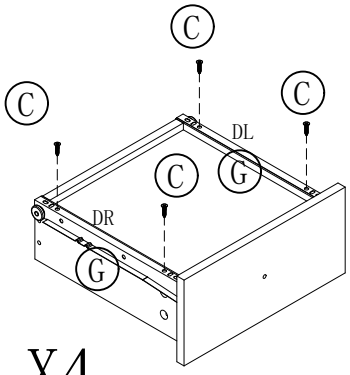

X4

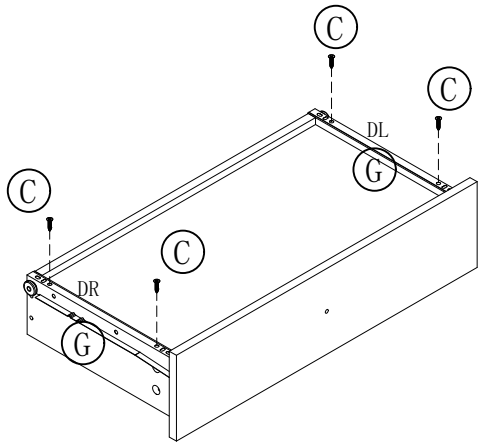

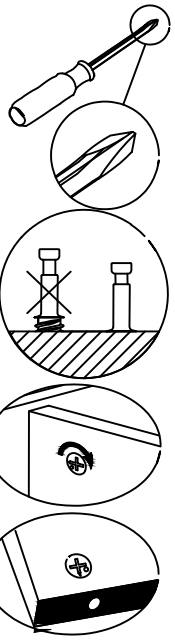

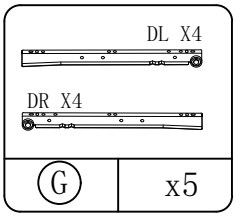

G	x5

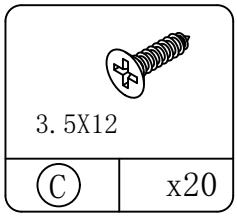

C	x20

23

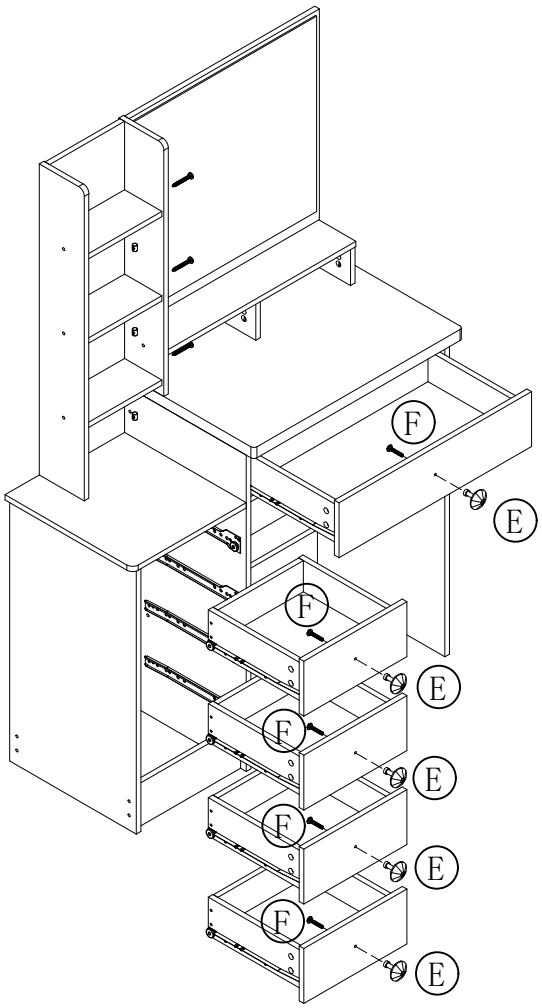

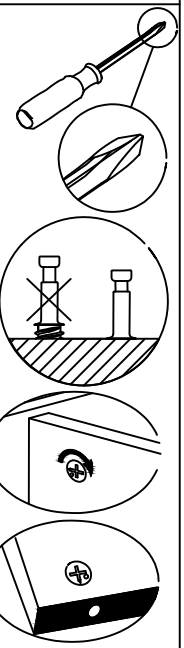

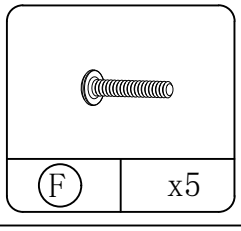

F	x5

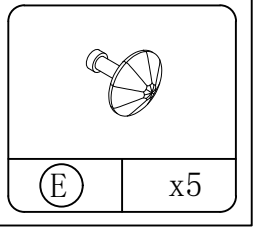

E	x5

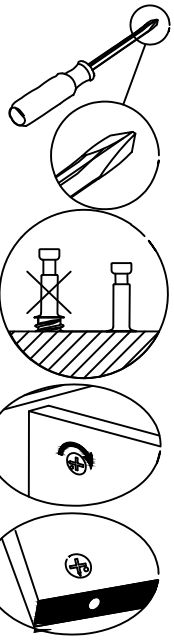

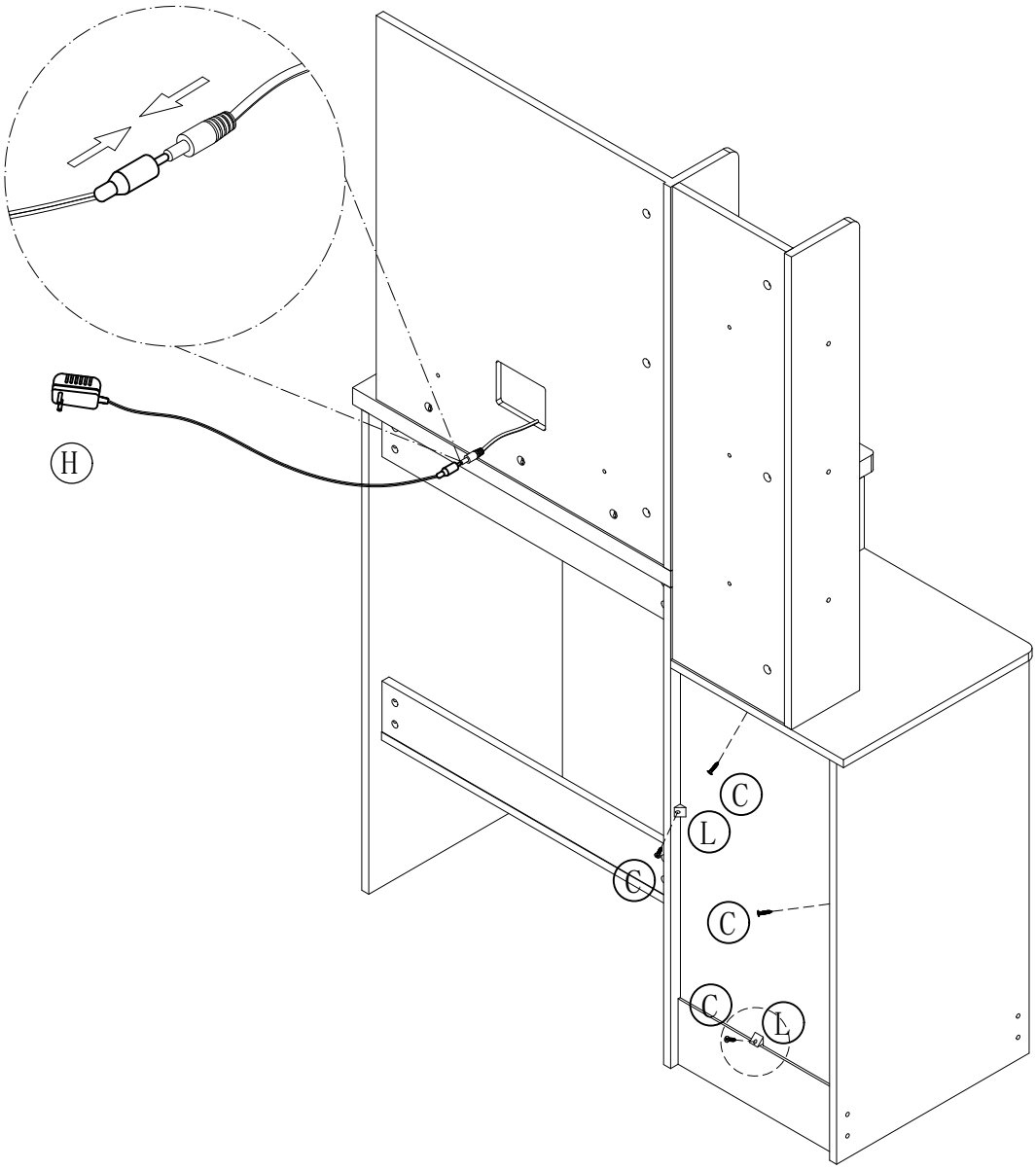

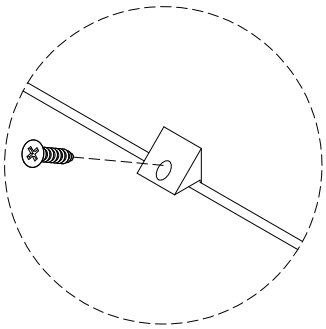

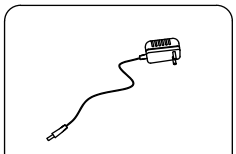

H	x1



L	x4



3.5X12

C	x4

25

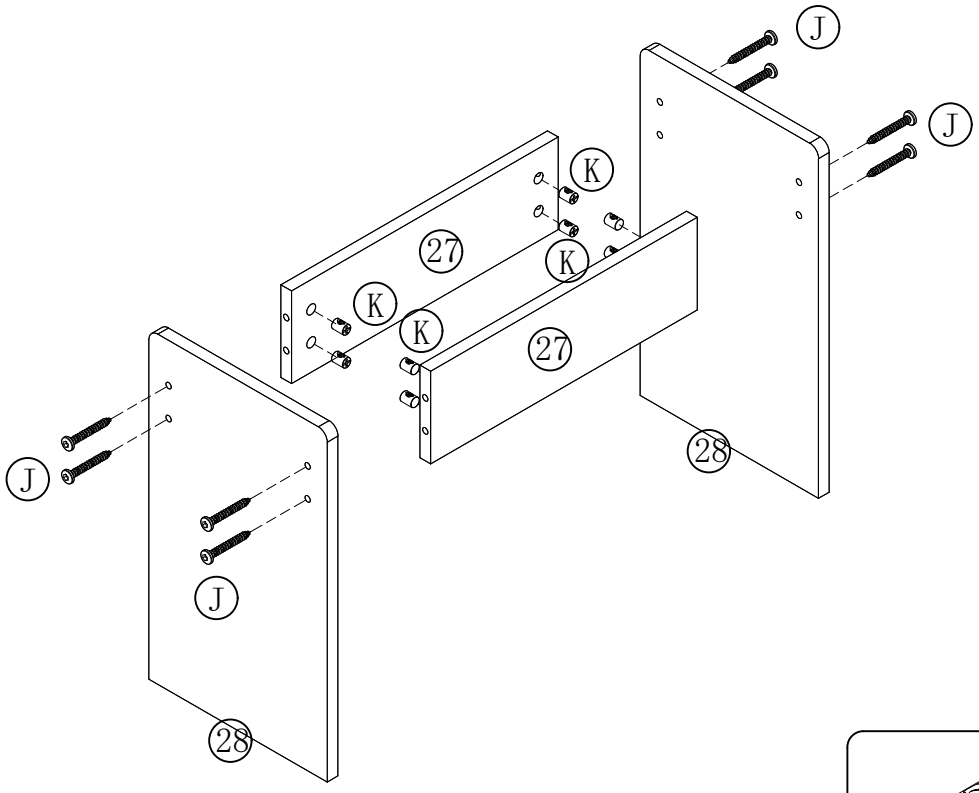

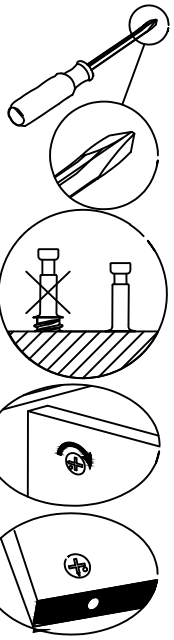

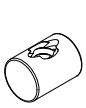	
K x8	J x8

26

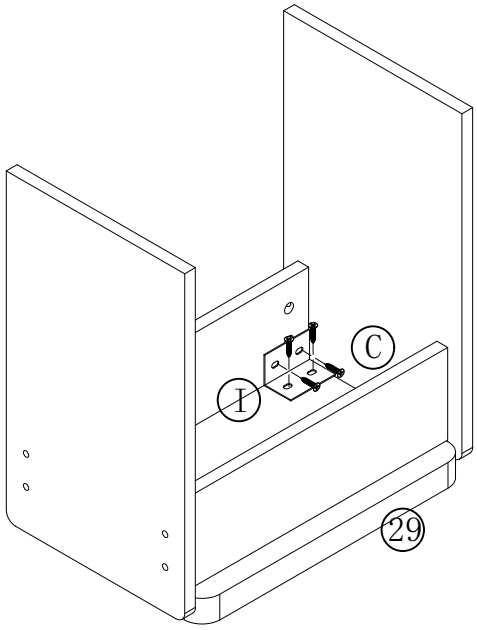

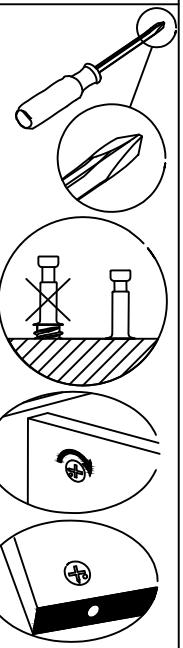

	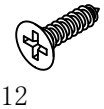 3.5X12
I x4	C x16