FLEXSTEEL®

Straight Console

#5

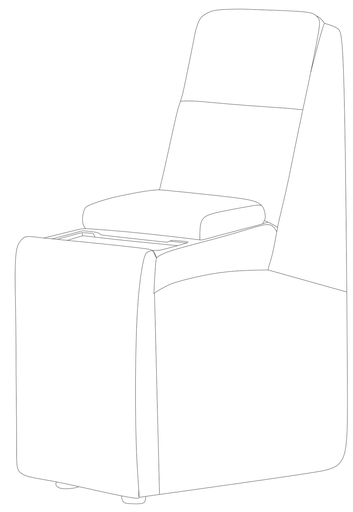

IMPORTANT NOTE

Read these instructions carefully, and familiarize yourself with each procedure before assembling the furniture. Check that you have all the component parts, and familiarize yourself with each part before proceeding.

Take all the fittings out of the plastic bag and separate them into groups. Ensure you have enough space to lay out all the parts before assembly. To prevent damage to the parts, we recommend that you assemble the unit on a soft, level surface.

Part List

A. Console Back
1 piece

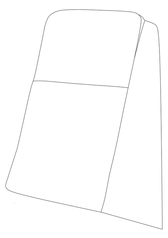

B. Console Base
1 piece

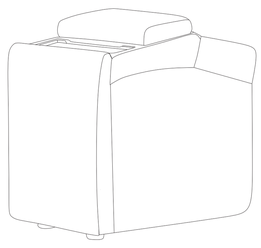

C. Wireless Charge Transformer
1 piece

Assembly Instructions

STEP 1

Detach the Transformer (C) from the bottom of the Console Base (B). (See Figure 1.)

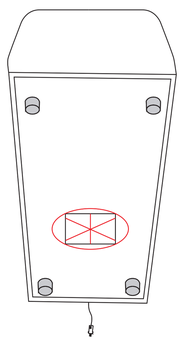

Figure 1

STEP 2

Attach the Console Back (A) to the Console Base (B). Ensure the latches fit well. (See Figure 2.)

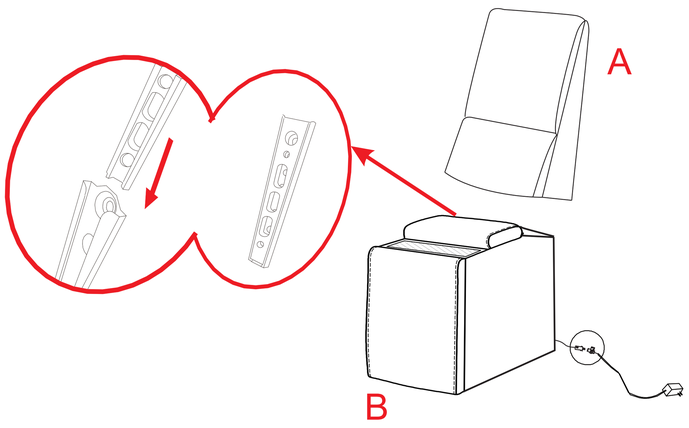

Figure 2

STEP 3

Begin sectional connection by placing the piece #1 in desired location in the room.
Then start sectional connection by placing #2 into piece #1.
Continue sectional connection with piece #3 thru #6 following the same method described above. (See Figure 3.)

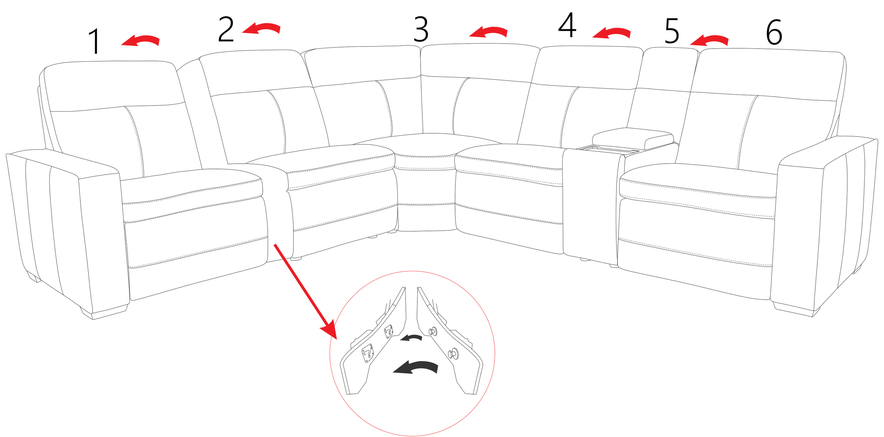

Figure 3

STEP 4

Connect the base motor cable to the Transformer for piece #1, #2 & #6.
Connect the wireless charge cable to the Transformer for piece #5, #4.
Plug the transformers into nearby outlets.
(See Figure 4.)

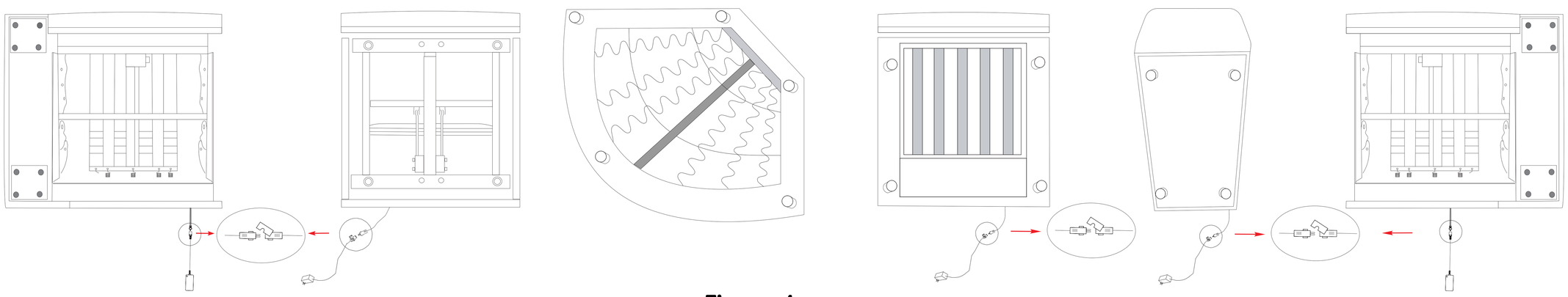

Figure 4

Disassembly Instructions

Firmly pull the console back upward by hand to detach it and pull the Console Back (A) up. (See Figure 5.)

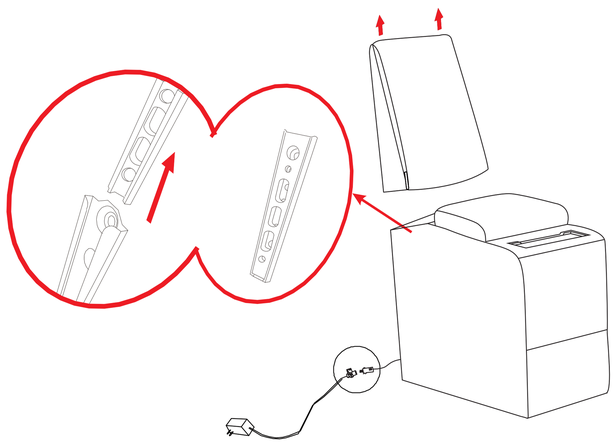

Figure 5

Console Base Functions

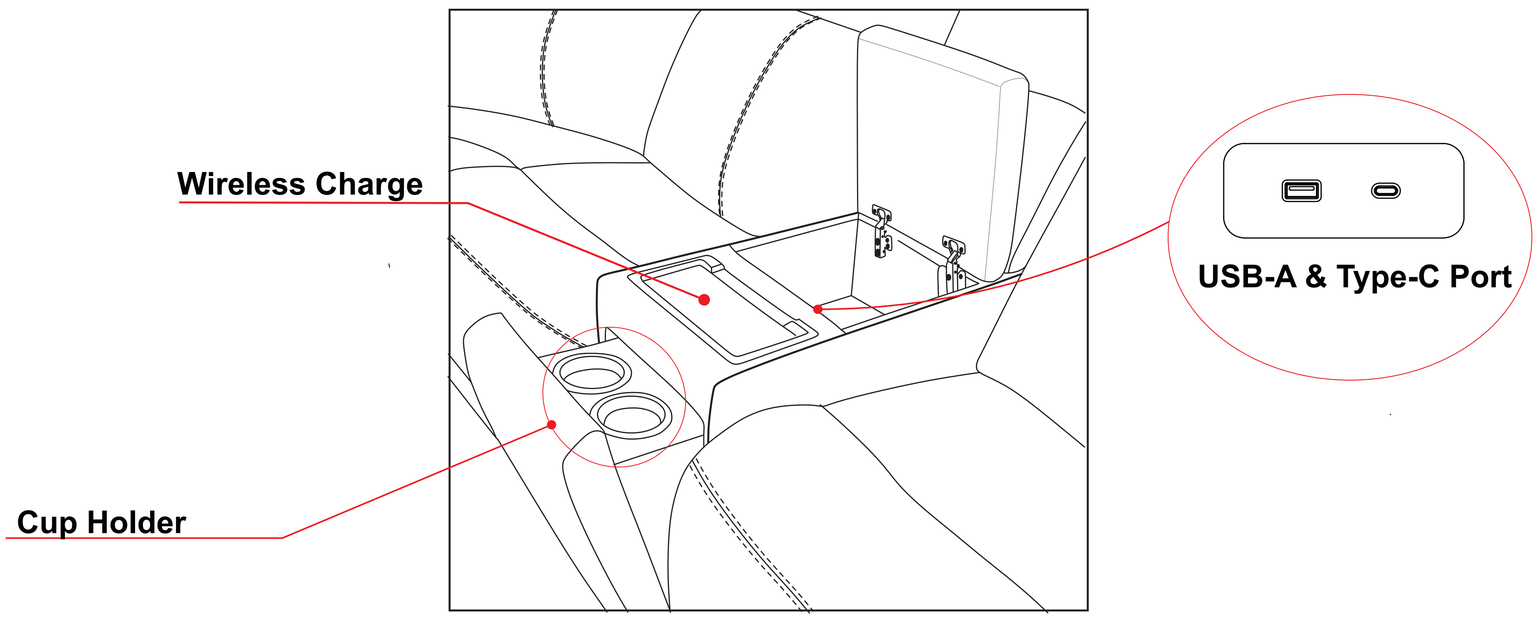

Figure 6

Wireless Charging Pad

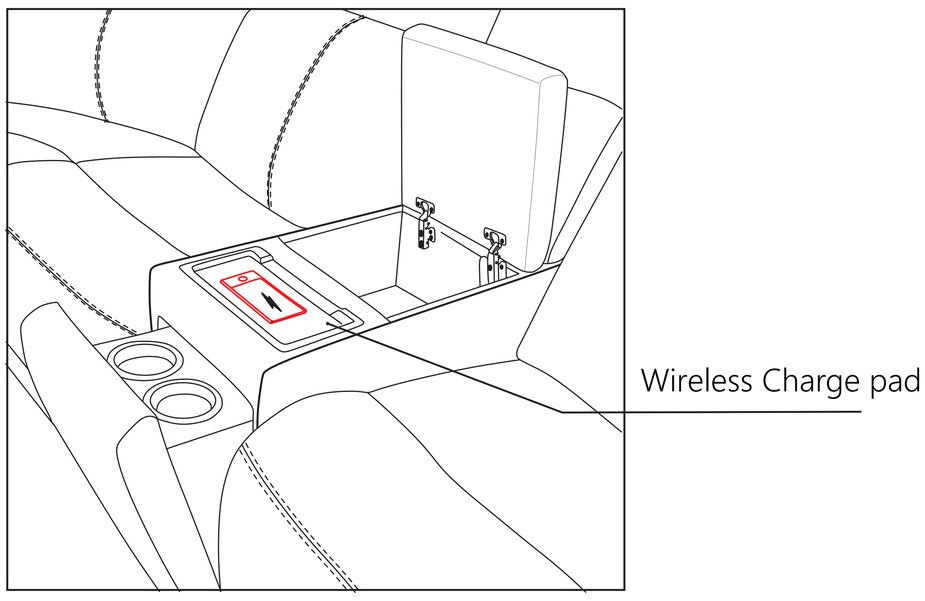

User Guide for Wireless Charger

Attention

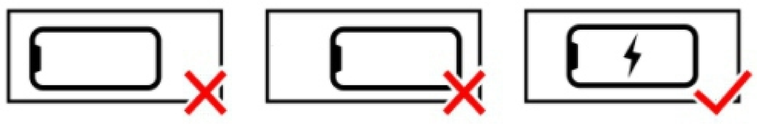

1. It is common for heat to be generated in wireless charging through the energy transfer process. This is part of the normal wireless energy transfer.
2. Phone should be centered on the wireless charging icon if an icon is present. The further the current must travel, charging effciency is reduced and more energy is lost to heat.
3. Phone should be centered on the tray if an icon is not present. The further the current must travel, charging effciency is reduced and more energy is lost to heat.
4. Make sure there aren't any foreign objects on the charger when charging. This can cause the charger to start stop multiple times if the foreign object detector senses an object.
5. Make sure to disconnect the phone from Apps and WiFi during wireless charging while charging and don't use the phone while wireless charging.

IMPORTANT NOTE

- To avoid any risk of suffocation to children or pets, dispose of all plastic bags immediately.
- To ensure proper performance, occasionally check for loose screws and tighten as needed.
- If the reclining functions are not working properly, check for loose cable connections before contacting the retailer.

FLEXSTEEL®

LAF Power Recliner with Power Headrest & Lumbar

#1

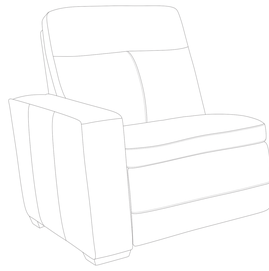

IMPORTANT NOTE

Read these instructions carefully, and familiarize yourself with each procedure before assembling the furniture. Check that you have all the component parts, and familiarize yourself with each part before proceeding.

Take all the fittings out of the plastic bag and separate them into groups. Ensure you have enough space to lay out all the parts before assembly. To prevent damage to the parts, we recommend that you assemble the unit on a soft, level surface.

Part List

A. Back
1 piece

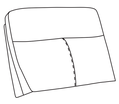

B. Seat
1 piece

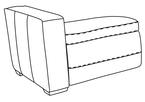

C.Transformer
1 piece

Assembly Instructions

STEP 1

Detach the Transformer (C), from the bottom of the Seat (B).
(See Figure 1.)

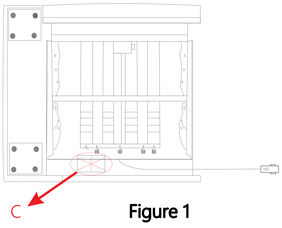

Figure 1

STEP 2

Lay the Back (A) face down on the Seat (B).
Connect the headrest and lumbar cables. (See Figure 2.)
Attach the Back (A) to the Seat (B). Ensure the latches fit well. (See Figure 3.)

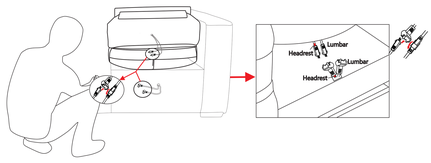

Figure 2

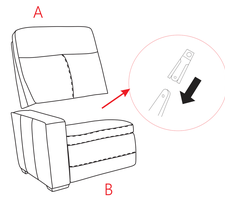

Figure 3

STEP 3

Zip the fabric on bottom of the Back (A) with back of Seat (B). (See Figure 4.)

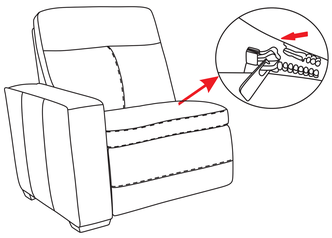

Figure 4

STEP 4

Begin sectional connection by placing the piece #1 in desired location in the room.
Then start sectional connection by placing #2 into piece #1.
Continue sectional connection with piece #3 thru #6 following the same method described above. (See Figure 5.)

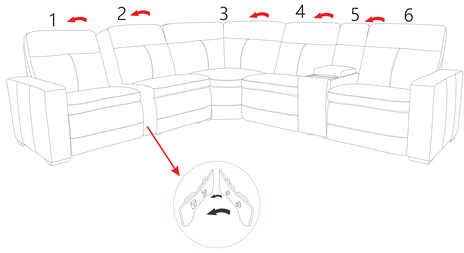

Figure 5

STEP 5

Connect the base motor cable to the Transformer for piece #1, #2 & #6.
Connect the wireless charge cable to the Transformer for piece #5, #4.
Plug the transformers into nearby outlets.
(See Figure 6.)

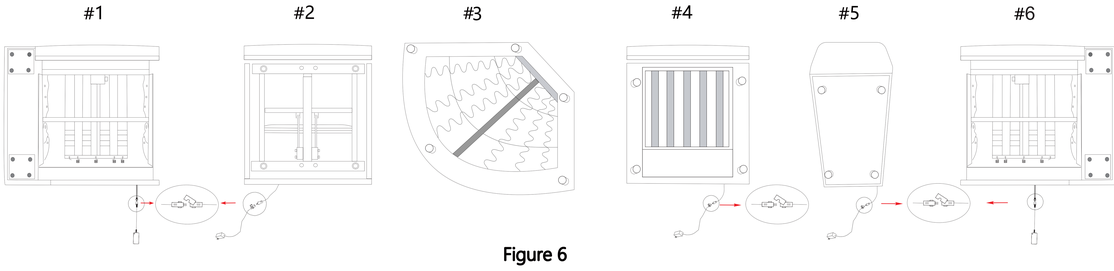

Figure 6

Disassembly Instructions

Unzip the zipper between Back (A) and Seat (B), then disconnect the headrest and lumbar cables.

Pull up the spring leaf in bracket, then lift Back (A) up. (See Figure 7.)

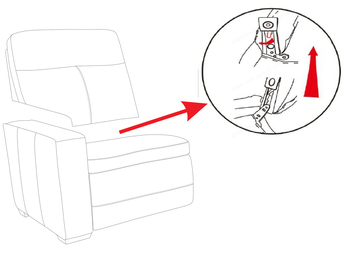

Figure 7

IMPORTANT NOTE

- To avoid any risk of suffocation to children or pets, dispose of all plastic bags immediately.
- To ensure proper performance, occasionally check for loose screws and tighten as needed.
- If the reclining functions are not working properly, check for loose cable connections before contacting the retailer.

FLEXSTEEL®

Wedge

#3

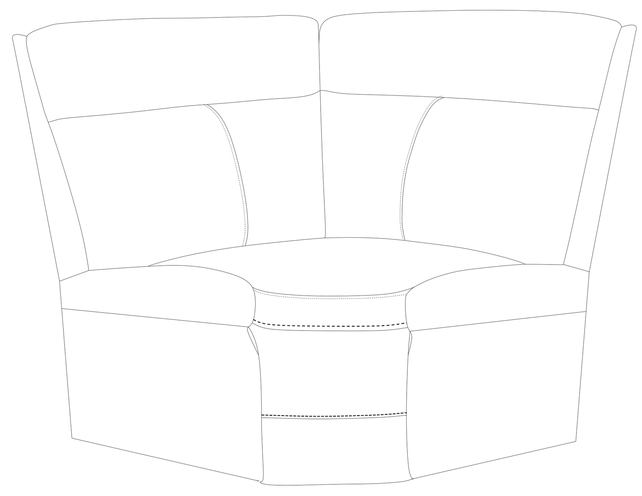

IMPORTANT NOTE

Read these instructions carefully, and familiarize yourself with each procedure before assembling the furniture. Check that you have all the component parts, and familiarize yourself with each part before proceeding.

Take all the fittings out of the plastic bag and separate them into groups. Ensure you have enough space to lay out all the parts before assembly. To prevent damage to the parts, we recommend that you assemble the unit on a soft, level surface.

Part List

A. Left Back
1 piece

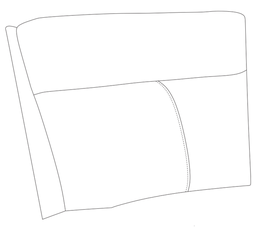

B. Right Back
1 piece

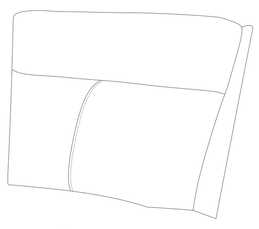

C. Seat
1 piece

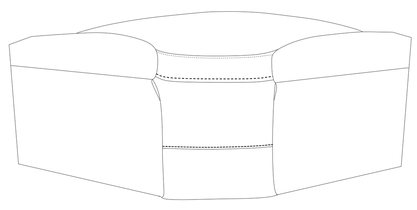

Assembly Instructions

STEP 1

Attach the Backs (A and B) to the Seat (C). Ensure the latches fit well. (See Figure 1.)

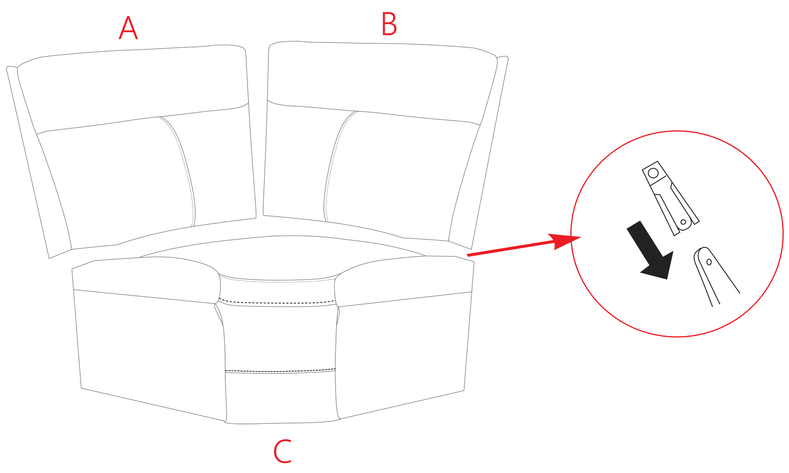

Figure 1

STEP 2

Begin sectional connection by placing the piece #1 in desired location in the room.
Then start sectional connection by placing #2 into piece #1.
Continue sectional connection with piece #3 thru #6 following the same method described above. (See Figure 2.)

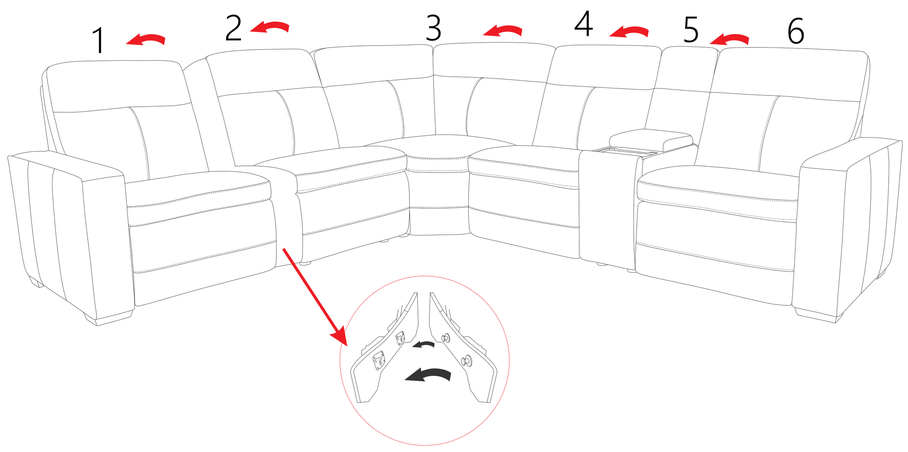

Figure 2

STEP 3

Connect the base motor cable to the Transformer for piece #1, #2 & #6.
Connect the wireless charge cable to the Transformer for piece #5, #4.
Plug the transformers into nearby outlets.
(See Figure 3.)

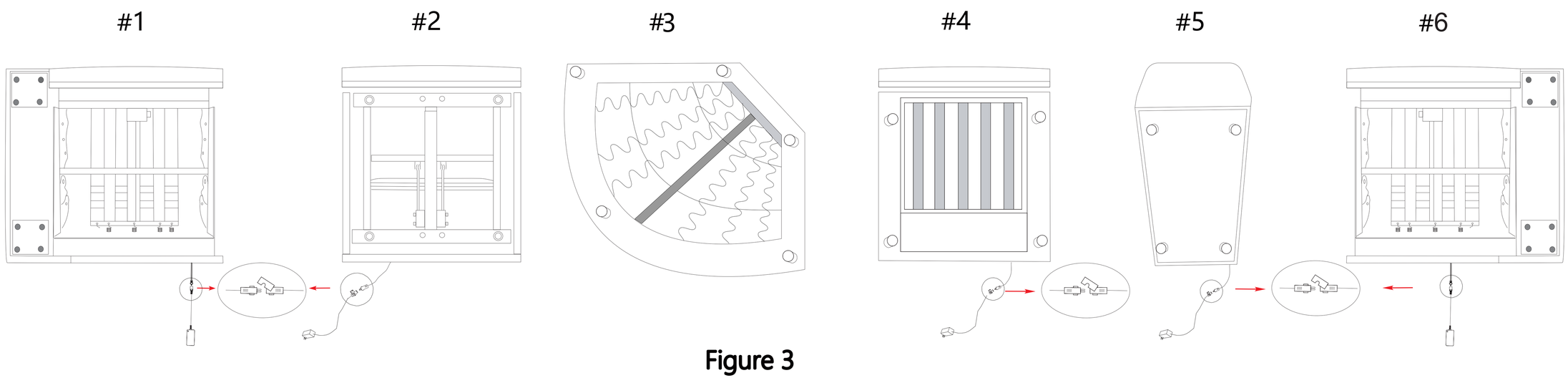

Figure 3

Disassembly Instructions

Pull up the spring leaf in bracket, then lift Back (A B) up. (See Figure 4.)

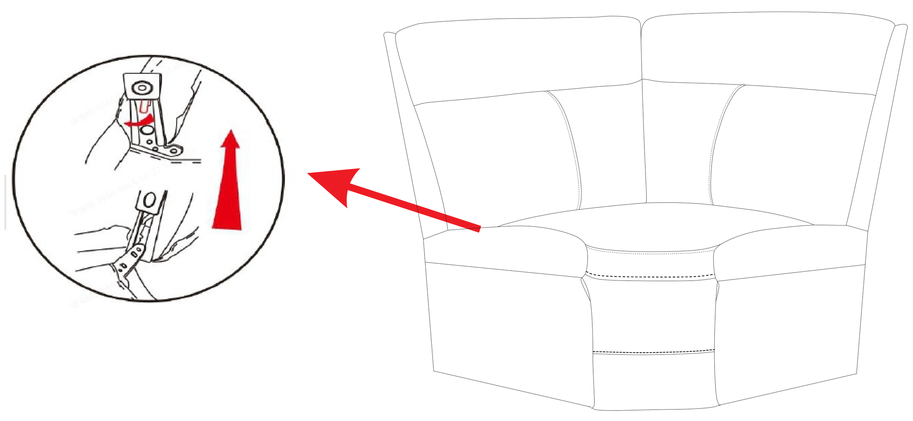

Figure 4

IMPORTANT NOTE

- To avoid any risk of suffocation to children or pets, dispose of all plastic bags immediately.
- To ensure proper performance, occasionally check for loose screws and tighten as needed.
- If the reclining functions are not working properly, check for loose cable connections before contacting the retailer.

FLEXSTEEL®

RAF Power Recliner with Power Headrest & Lumbar #6

IMPORTANT NOTE

Read these instructions carefully, and familiarize yourself with each procedure before assembling the furniture. Check that you have all the component parts, and familiarize yourself with each part before proceeding.

Take all the fittings out of the plastic bag and separate them into groups. Ensure you have enough space to lay out all the parts before assembly. To prevent damage to the parts, we recommend that you assemble the unit on a soft, level surface.

Part List

A. Back
1 piece

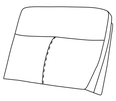

B. Seat
1 piece

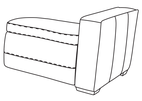

C. Transformer
1 piece

Assembly Instructions

STEP 1

Detach the Transformer (C), from the bottom of the Seat (B). (See Figure 1.)

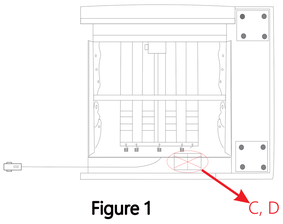

Figure 1

STEP 2

Lay the Back (A) face down on the Seat (B).
Connect the headrest and lumbar cables. (See Figure 2.)
Attach the Back (A) to the Seat (B). Ensure the latches fit well. (See Figure 3.)

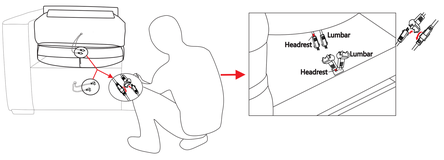

Figure 2

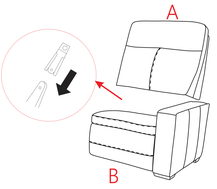

Figure 3

STEP 3

Zip the fabric on bottom of the Back (A) with back of Seat (B). (See Figure 4.)

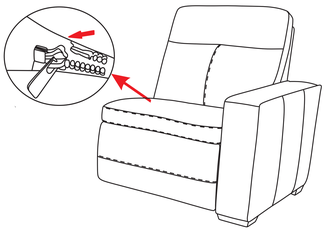

Figure 4

STEP 4

Begin sectional connection by placing the piece #1 in desired location in the room.
Then start sectional connection by placing #2 into piece #1.
Continue sectional connection with piece #3 thru #6 following the same method described above. (See Figure 5.)

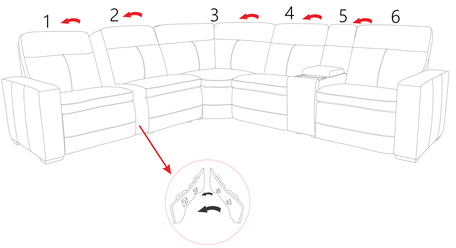

Figure 5

STEP 5

Connect the base motor cable to the Transformer for piece #1, #2 & #6.
Connect the wireless charge cable to the Transformer for piece #5, #4.
Plug the transformers into nearby outlets.
(See Figure 6.)

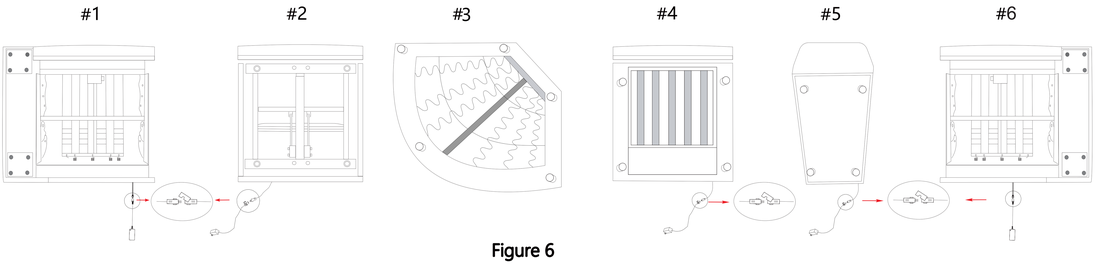

Figure 6

Disassembly Instructions

Unzip the zipper between Back (A) and Seat (B), then disconnect the headrest and lumbar cables.

Pull up the spring leaf in bracket, then lift Back (A) up. (See Figure 7.)

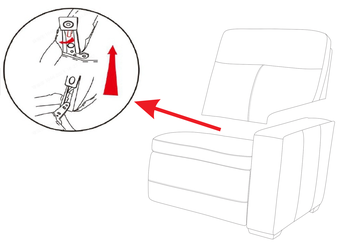

Figure 7

IMPORTANT NOTE

- To avoid any risk of suffocation to children or pets, dispose of all plastic bags immediately.
- To ensure proper performance, occasionally check for loose screws and tighten as needed.
- If the reclining functions are not working properly, check for loose cable connections before contacting the retailer.

FLEXSTEEL®

Armless Chair with Drop Down Console

#4

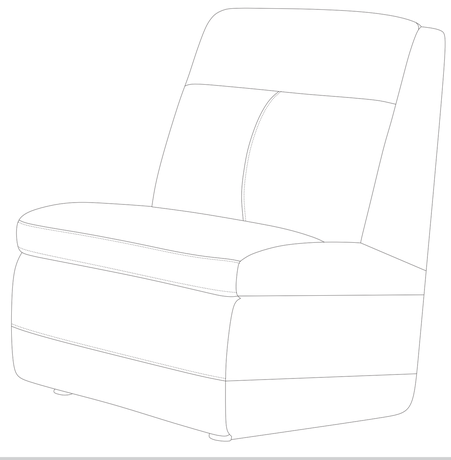

IMPORTANT NOTE

Read these instructions carefully, and familiarize yourself with each procedure before assembling the furniture. Check that you have all the component parts, and familiarize yourself with each part before proceeding.

Take all the fittings out of the plastic bag and separate them into groups. Ensure you have enough space to lay out all the parts before assembly. To prevent damage to the parts, we recommend that you assemble the unit on a soft, level surface.

Part List

A. Back
1 piece

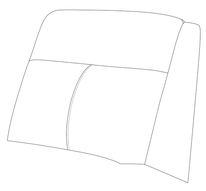

B. Seat
1 piece

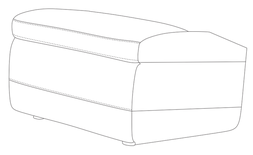

C. Wireless Charge Transformer
1 piece

Assembly Instructions

STEP 1

Detach the Transformer (C), from the bottom of the Seat (B).
(See Figure 1.)

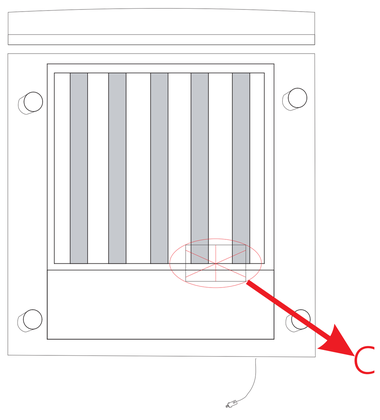

Figure 1

STEP 2

Lay the Back (A) face down on the Seat (B).
Connect the Light control switch and the Wireless Charger cables between Back (A) and Seat (B). (See Figure 2.)

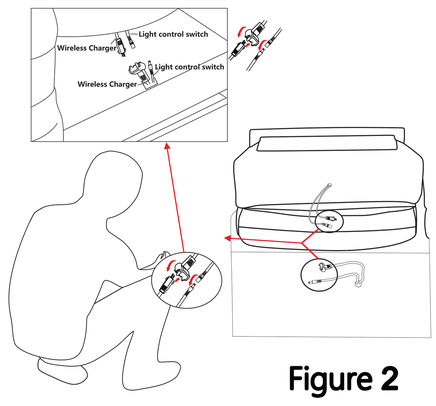

Figure 2

STEP 3

Attach the Back (A) to the Seat (B). Ensure the latches fit well. (See Figure 3.)

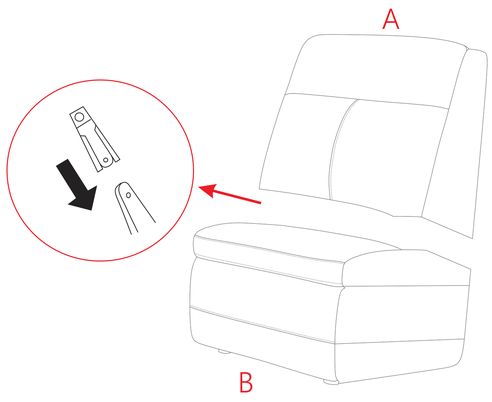

Figure 3

STEP 4

Begin sectional connection by placing the piece #1 in desired location in the room.
Then start sectional connection by placing #2 into piece #1.
Continue sectional connection with piece #3 thru #6 following the same method described above. (See Figure 4.)

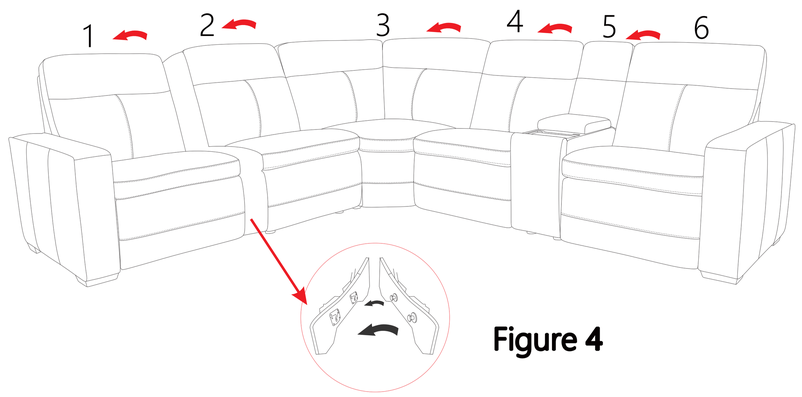

Figure 4

STEP 5

Connect the base motor cable to the Transformer for piece #1, #2 & #6.
Connect the wireless charge cable to the Transformer for piece #5, #4.
Plug the Transformers into nearby outlets.
(See Figure 5.)

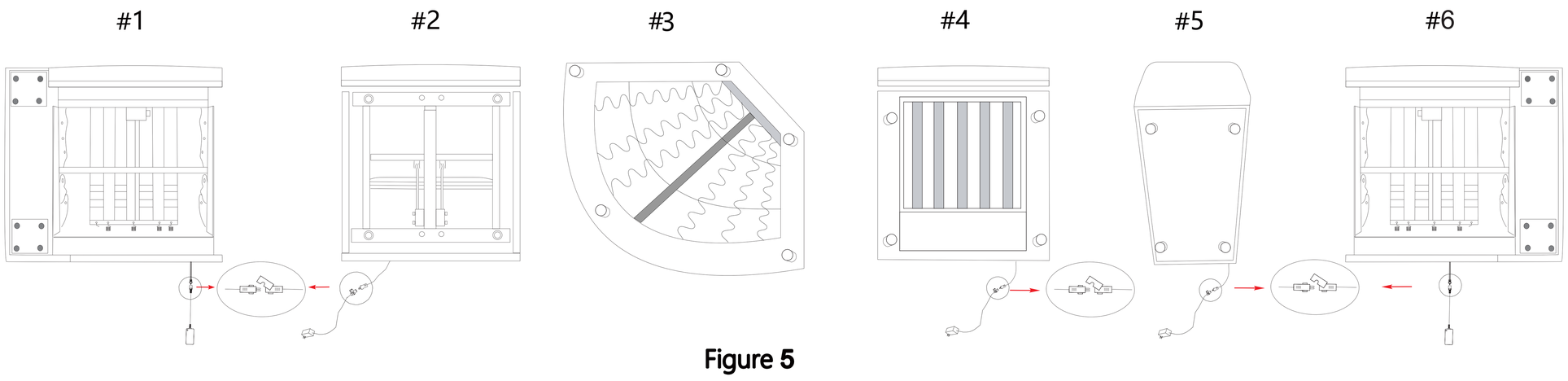

Figure 5

Disassembly Instructions

Pull up the spring leaf in bracket, then lift Back (A) up. (See Figure 6.)

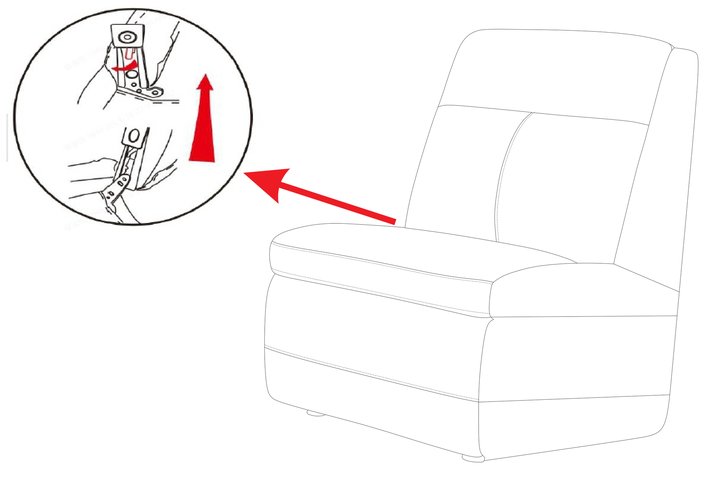

Figure 6

Drop Down center Back

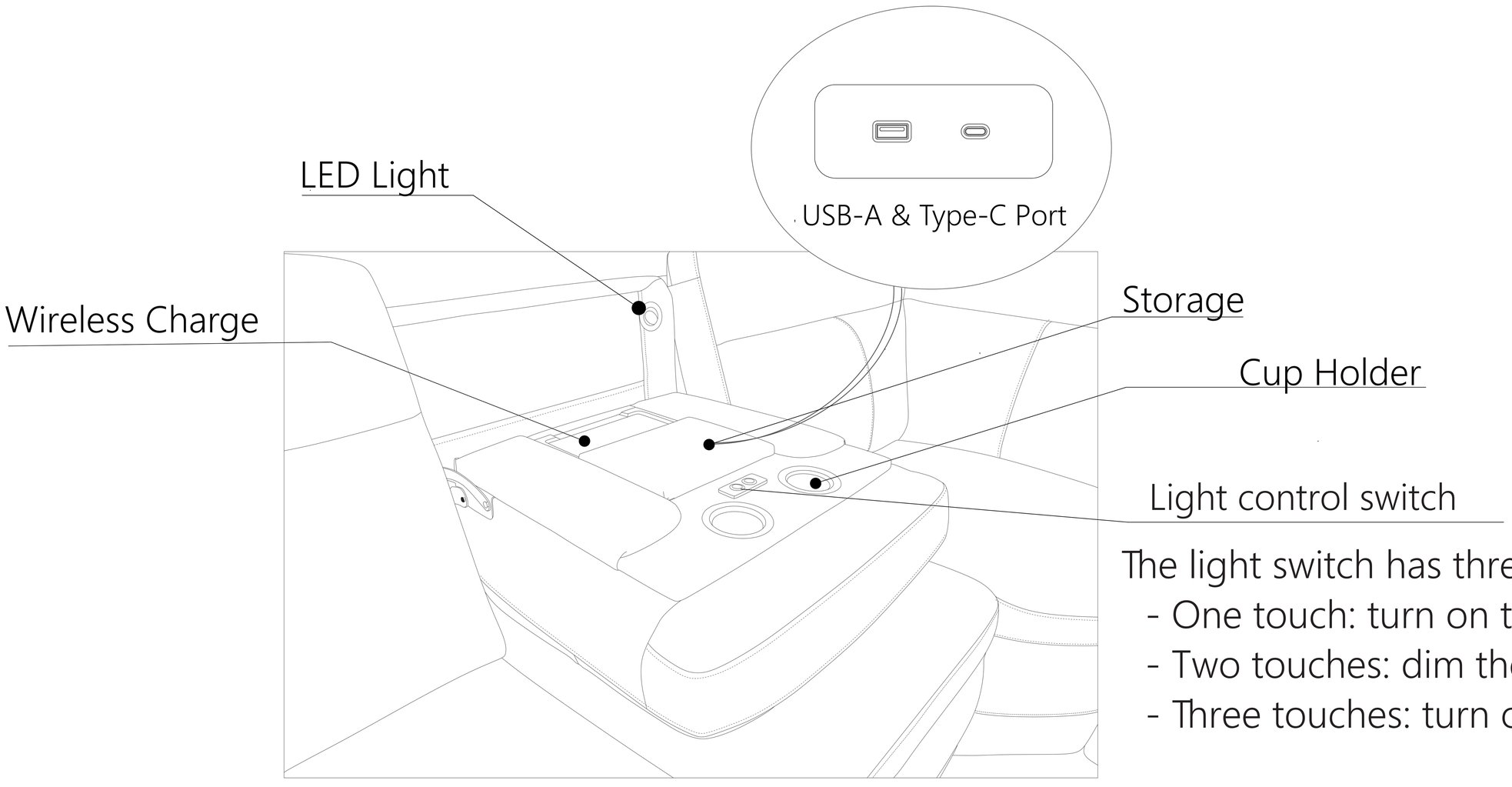

The light switch has three brightness modes.
- One touch: turn on the light at full brightness.
- Two touches: dim the light.
- Three touches: turn off the light.

Wireless Charging Pad

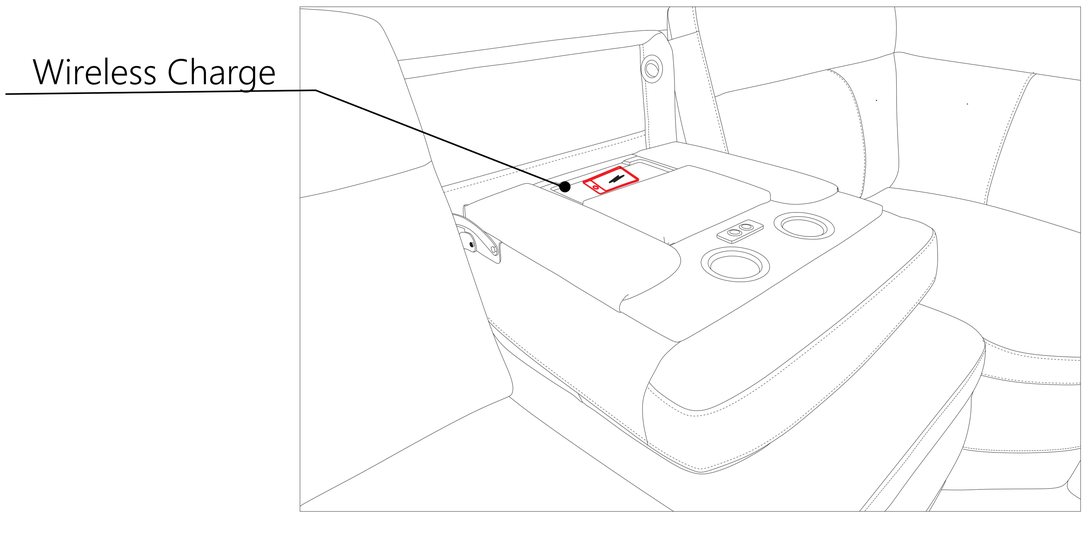

User Guide for Wireless Charger

Attention

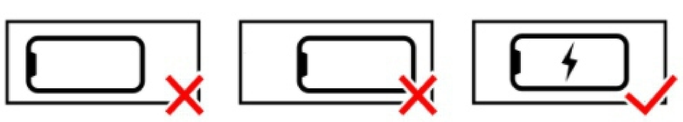

1. It is common for heat to be generated in wireless charging through the energy transfer process. This is part of the normal wireless energy transfer.
2. Phone should be centered on the wireless charging icon if an icon is present. The further the current must travel, charging effciency is reduced and more energy is lost to heat.
3. Phone should be centered on the tray if an icon is not present. The further the current must travel, charging effciency is reduced and more energy is lost to heat.
4. Make sure there aren't any foreign objects on the charger when charging. This can cause the charger to start stop multiple times if the foreign object detector senses an object.
5. Make sure to disconnect the phone from Apps and WiFi during wireless charging while charging and don't use the phone while wireless charging.

IMPORTANT NOTES

- To avoid any risk of suffocation to children or pets, dispose of all plastic bags immediately.
- To ensure proper performance, occasionally check for loose hardware and tighten as needed.
- If the reclining functions are not working properly, check for loose cable connections before contacting the retailer.

FLEXSTEEL®

Armless Power Recliner with Power Headrest & Lumbar

#2

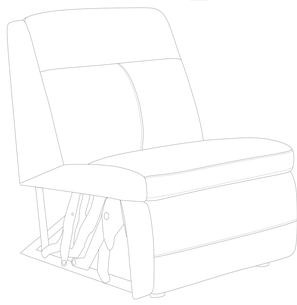

IMPORTANT NOTE

Read these instructions carefully, and familiarize yourself with each procedure before assembling the furniture. Check that you have all the component parts, and familiarize yourself with each part before proceeding.

Take all the fittings out of the plastic bag and separate them into groups. Ensure you have enough space to lay out all the parts before assembly. To prevent damage to the parts, we recommend that you assemble the unit on a soft, level surface.

Part List

A. Back
1 piece

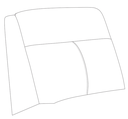

B. Seat
1 piece

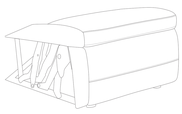

C.Transformer
1 piece

Assembly Instructions

STEP 1

Detach the Transformer (C), from the bottom of the Seat (B).
(See Figure 1.)

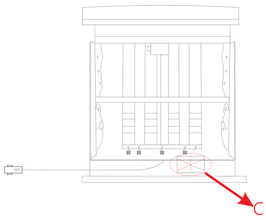

Figure 1

STEP 2

Lay the Back (A) face down on the Seat (B).
Connect the headrest and lumbar cables. (See Figure 2.)
Attach the Back (A) to the Seat (B). Ensure the latches fit well. (See Figure 3.)

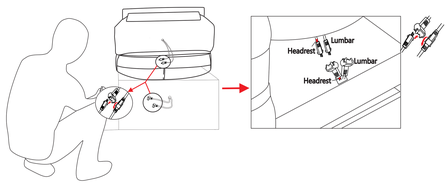

Figure 2

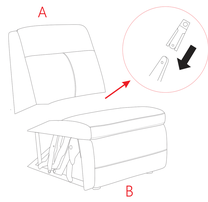

Figure 3

STEP 3

Zip the fabric on bottom of the Back (A) with back of Seat (B). (See Figure 4.)

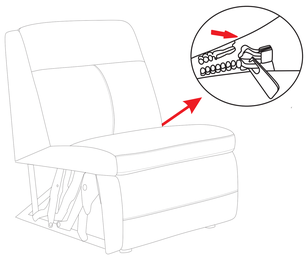

Figure 4

STEP 4

Begin sectional connection by placing the piece #1 in desired location in the room.
Then start sectional connection by placing #2 into piece #1.
Continue sectional connection with piece #3 thru #6 following the same method described above. (See Figure 5.)

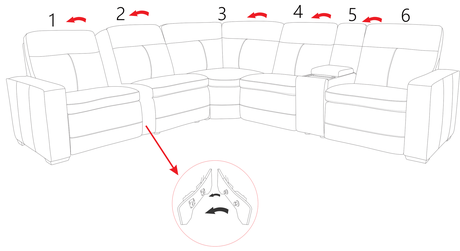

Figure 5

STEP 5

Connect the base motor cable to the Transformer for piece #1, #2 & #6.
Connect the wireless charge cable to the Transformer for piece #5, #4.
Plug the transformers into nearby outlets.
(See Figure 6.)

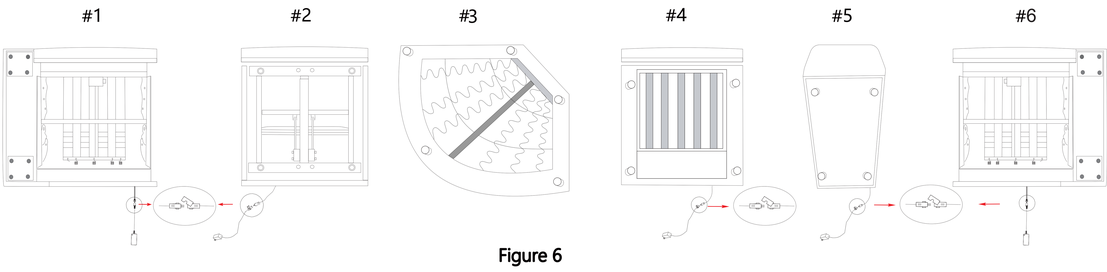

Figure 6

Disassembly Instructions

Unzip the zipper between Back (A) and Seat (B), then disconnect the headrest and lumbar cables.

Pull up the spring leaf in bracket, then lift Back (A) up. (See Figure 7.)

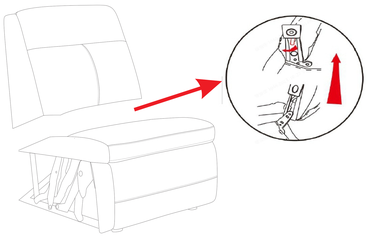

Figure 7

IMPORTANT NOTE

- To avoid any risk of suffocation to children or pets, dispose of all plastic bags immediately.
- To ensure proper performance, occasionally check for loose screws and tighten as needed.
- If the reclining functions are not working properly, check for loose cable connections before contacting the retailer.