ITEM NO.	PART NUMBER	DESCRIPTION	QTY.
1	BPQN	Base	2
2	BLSH-1.25	SUPPORT	2
3	GLBV-24	Glass	1

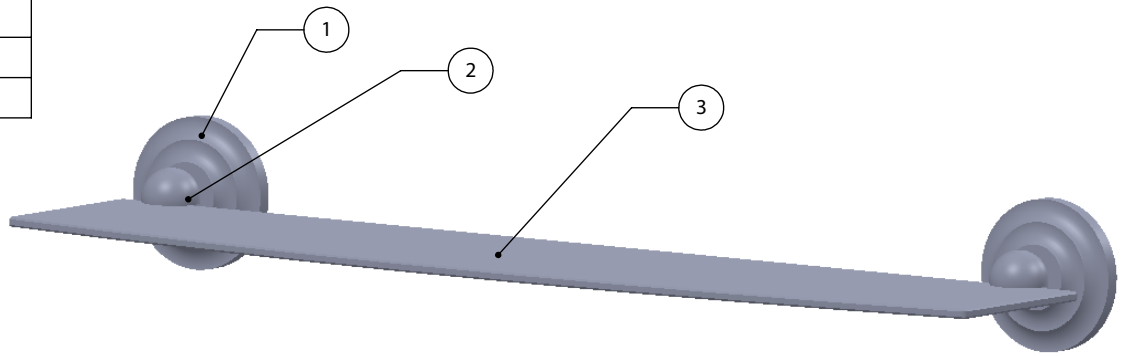

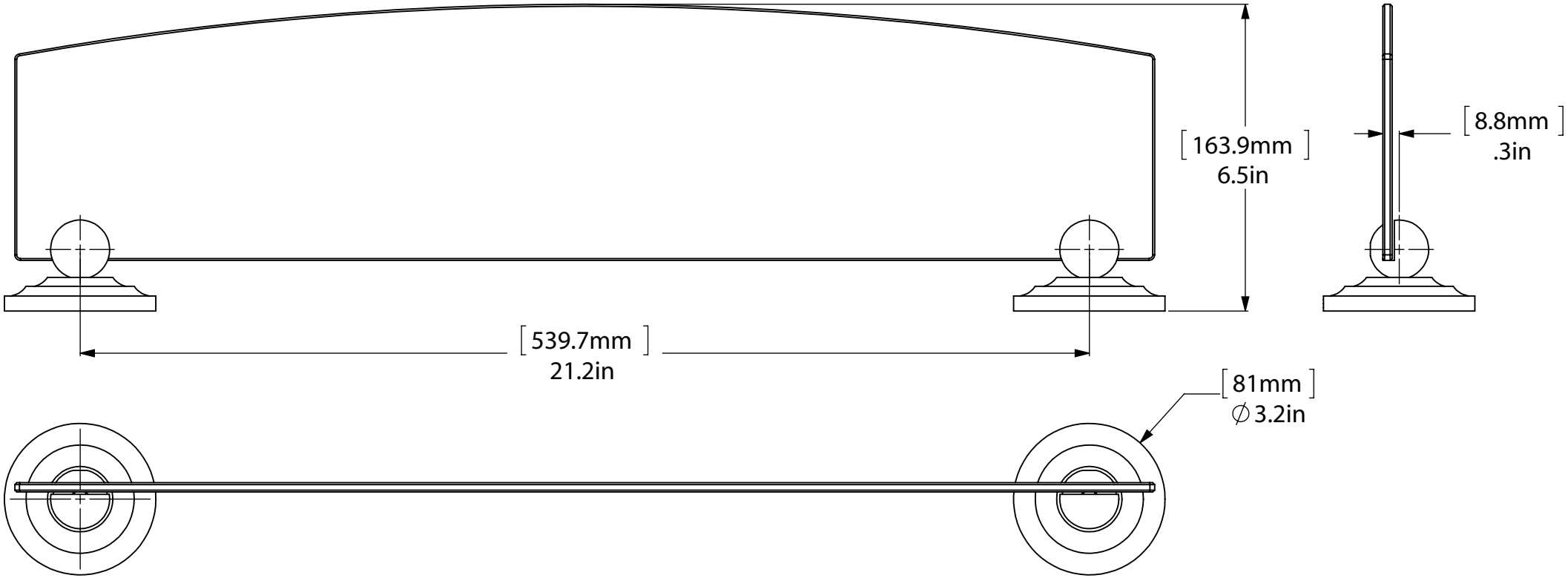

UNLESS OTHERWISE STATED											
DO NOT SCALE DRAWING	X.XXX +/-0.025		INITIALS	DATE	ITEM	QTY	DRG/PART NO	CLIENT:			
CHAMFER ALL EDGES 0.5X45°	X.XX +/-0.1	DESIGNED		IJM	MATERIAL	BRASS		WEIGHT		FINISH	TBD
DRAWING ISO	X.X +/-0.25	DRAWN		IJM	HEAT TREAT	NA				QUANTITY	
	X +/-0.75	CHECKED		R. ANDRIS	CUSTOMER			CUSTOMER No		---	
	ANGLES	PROJ.ENG			DESCRIPTION:						REV
	X.XX +/-0.05°	SAFETY									0
	X.X +/-0.1°	APPROVED		R. ANDRIS							
FIRST ANGLE PROJECTION	X +/-0.5°									SCALE 1:3	SHEET: 01 A4
	MACHINED FINISH 3.2										