Assembly Instructions

Caution : You must read this before you proceed

Care & Maintenance

- Not for commercial use. For residential use only.
- Furniture may scratch floors. We recommend using furniture pads to protect your floors.
- Do not put hot items directly on furniture surface.
- Do not clean furniture with harsh cleansers or polish.
- Do not place furniture under direct sunlight.
- Do not place furniture near heating or cooling vents.
- Do not write on furniture without a padded barrier to protect the surface.
- Do not place furniture outside. For indoor use only.
- Stains may be removed with mild soap solution and damp cloth.
- Children should not climb or jump on the furniture.
- Dust and pick-up spills using a clean, non-colored, lint-free cloth.

Please look in carton for hardware packs and legs.
Sets often ship in multiple boxes and may arrive a day or two apart.

CHAIR

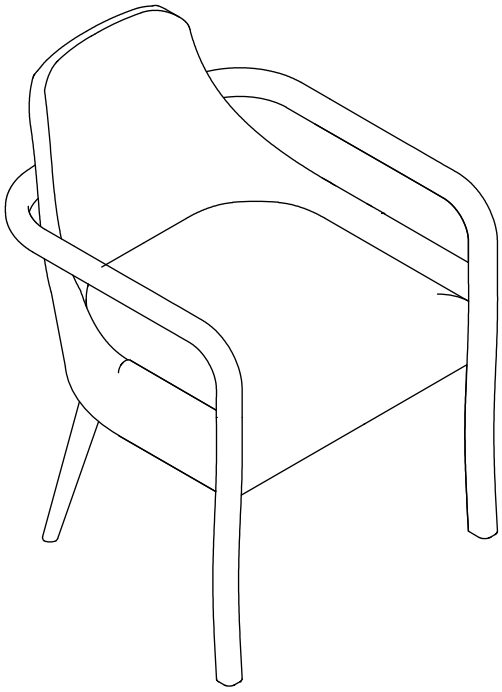

Parts List

Label	Picture	Description	QTY
A	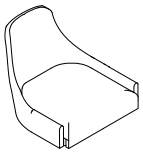	Chair Back	1
B	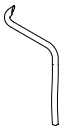	Front Left Leg	1
C	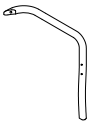	Front Right Leg	1
D		Back Left Leg	1
E		Back Right Leg	1

Hardware

Label	Picture	Description	QTY
①		Bolt (1/4" x 60mm)	4+1
②		Bolt (1/4" x 45mm)	4+1
③		Bolt (5/16" x 40mm)	2+1
④		Spring washer/(5/16x11mm)	10+1
⑤		Flat washer/(5/16x19mm)	10+1
⑥		Allen wrench	1
⑦		Wooden button(Ø20x10mm)	2

not included

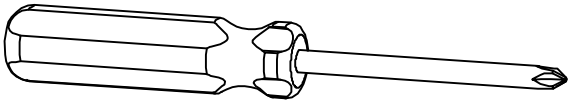

Assembly preparation

Before beginning assembly:

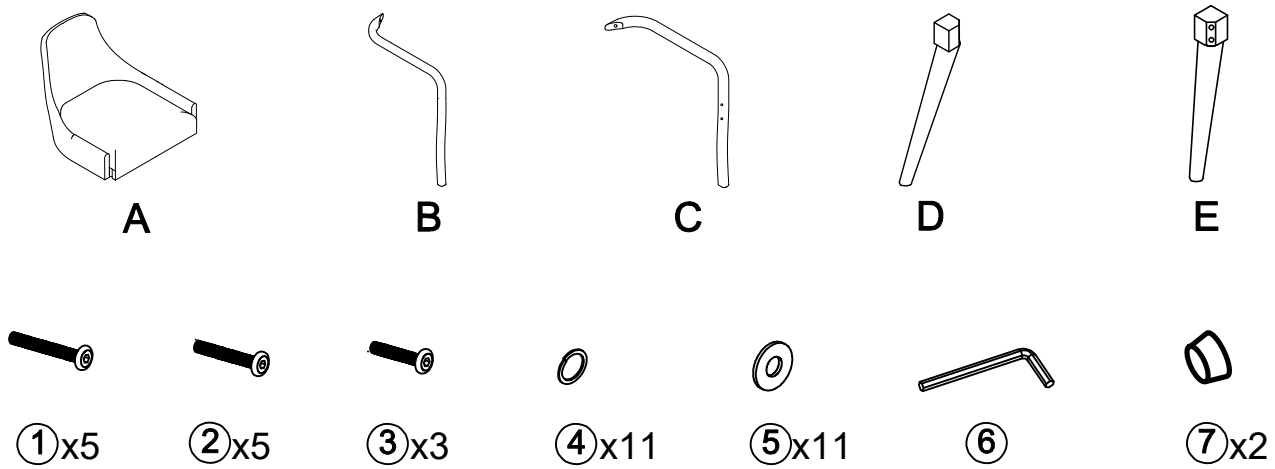

- Read instructions, cover to cover-
- Have 2 adults on hand for assembly-
- Do not assemble on flooring of carpet-
- Assemble on a clean non-marring suface (packing foam)-
- Save all packaging until finished-

Assembly steps

Overview

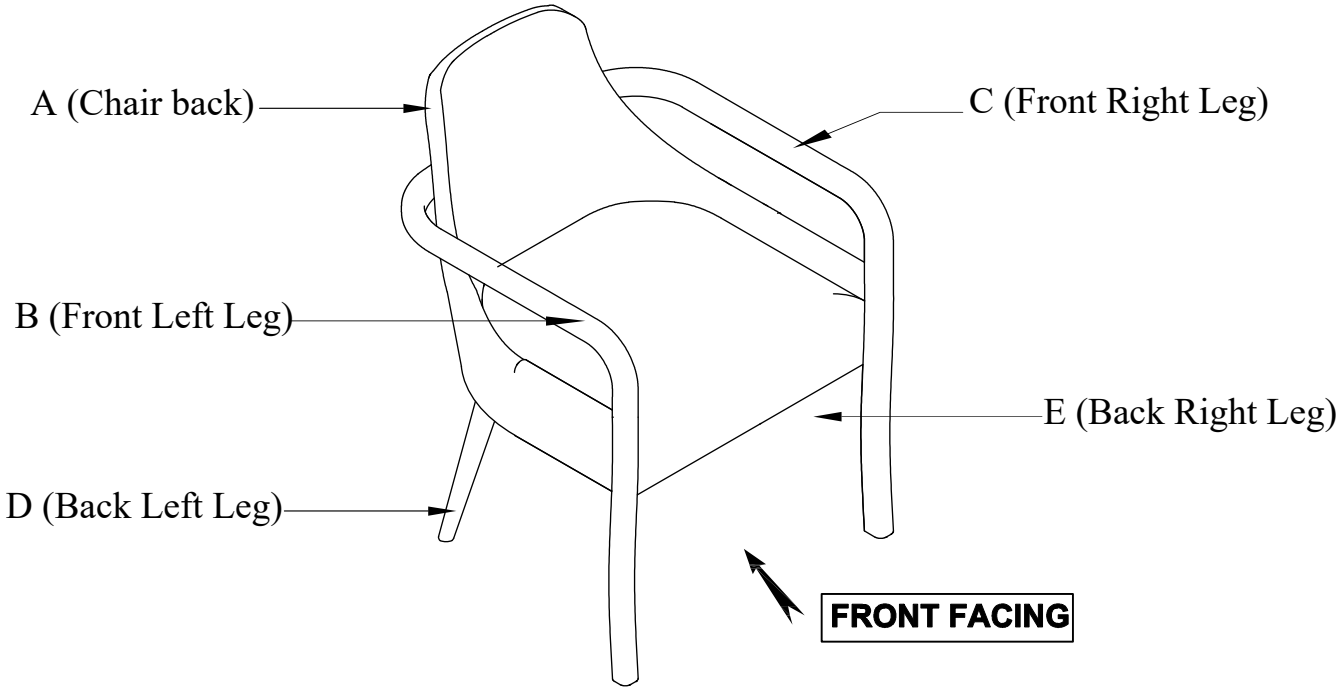

This chair has multiple parts and may require up to 30 minutes to assemble. To give you an overview of the chair parts, the above picture is provided to help you put the various parts into perspective. Please read through the instructions below to familiarize yourself with the parts and steps before assembly.

Step 1

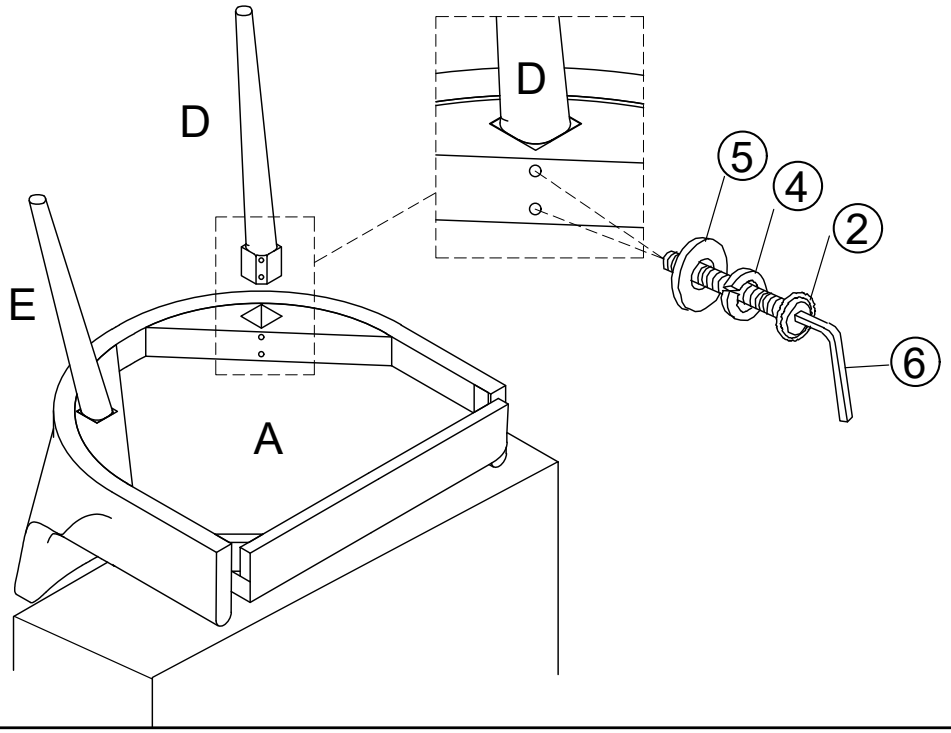

Attach Back Left Leg (D),Back Right Leg (E) into the chair back (A). Using bolts (2), spring washer (4), and flat washer (5) and allen wrench (6). Do not full tighten the bolts.

Step 2

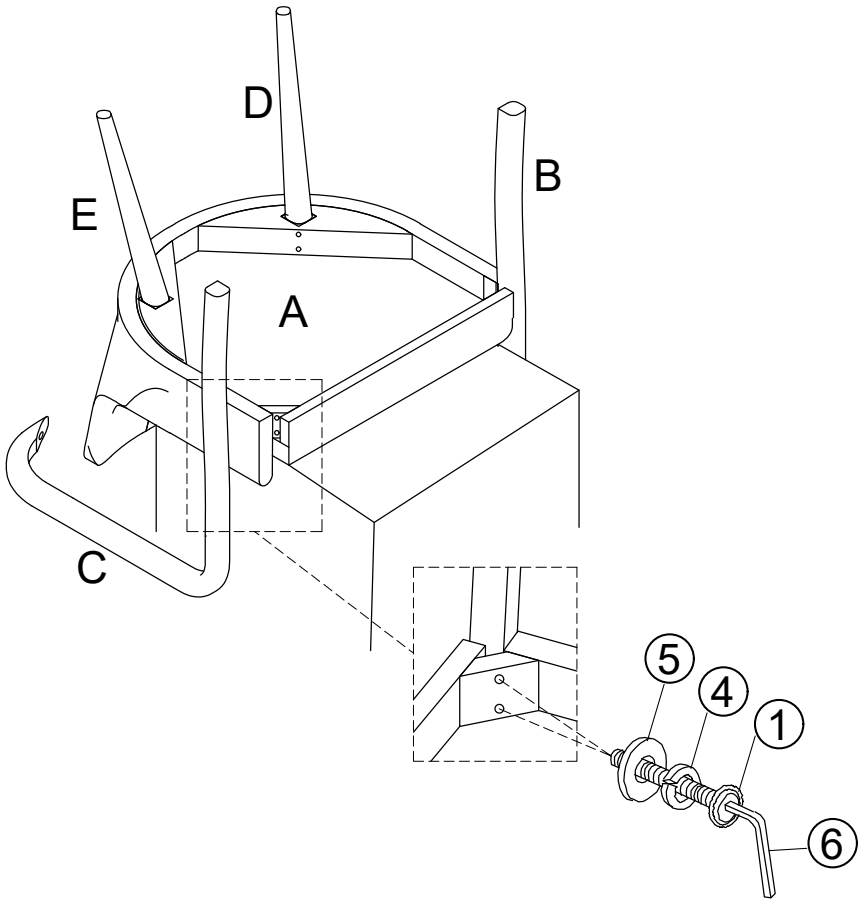

Attach Front Left Leg(B),Front Right Leg(C) to the chair back (A) using the bolts (1), the spring washer (4), the flat washer (5) and the Allen key (6). Do not full tighten the bolts.

Step 3

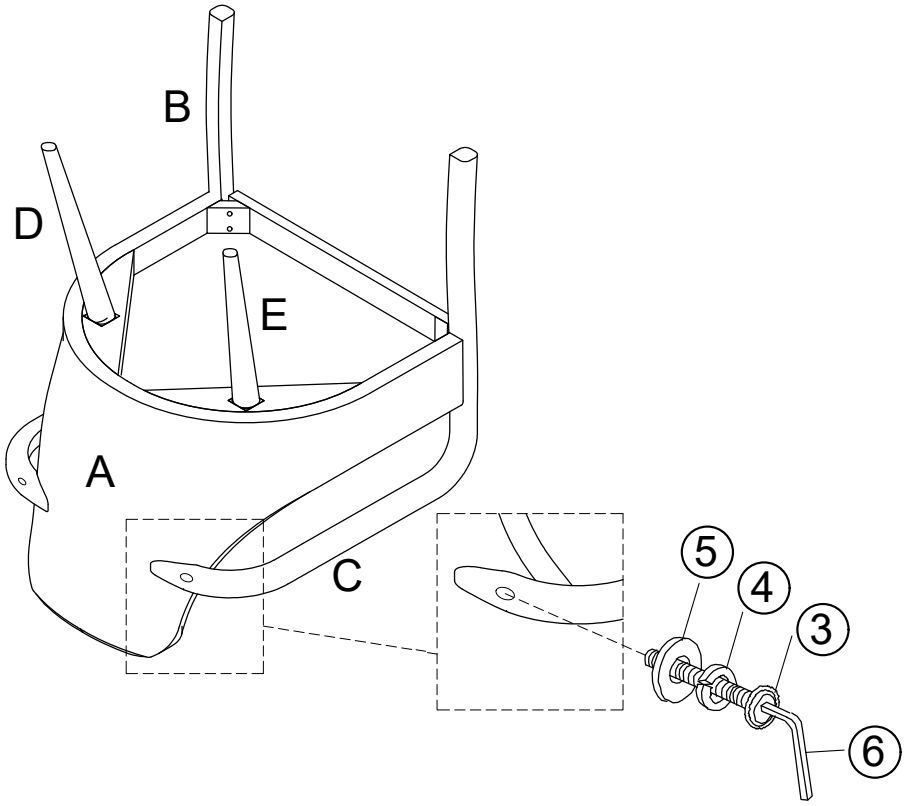

After that, attach the Front Left Leg (B) and Front Right Leg (C) to the chair back (A) using the bolts (3), the spring washer (4), the flat washer (5), and the Allen key (6). Fully tighten the bolts.

Step 4

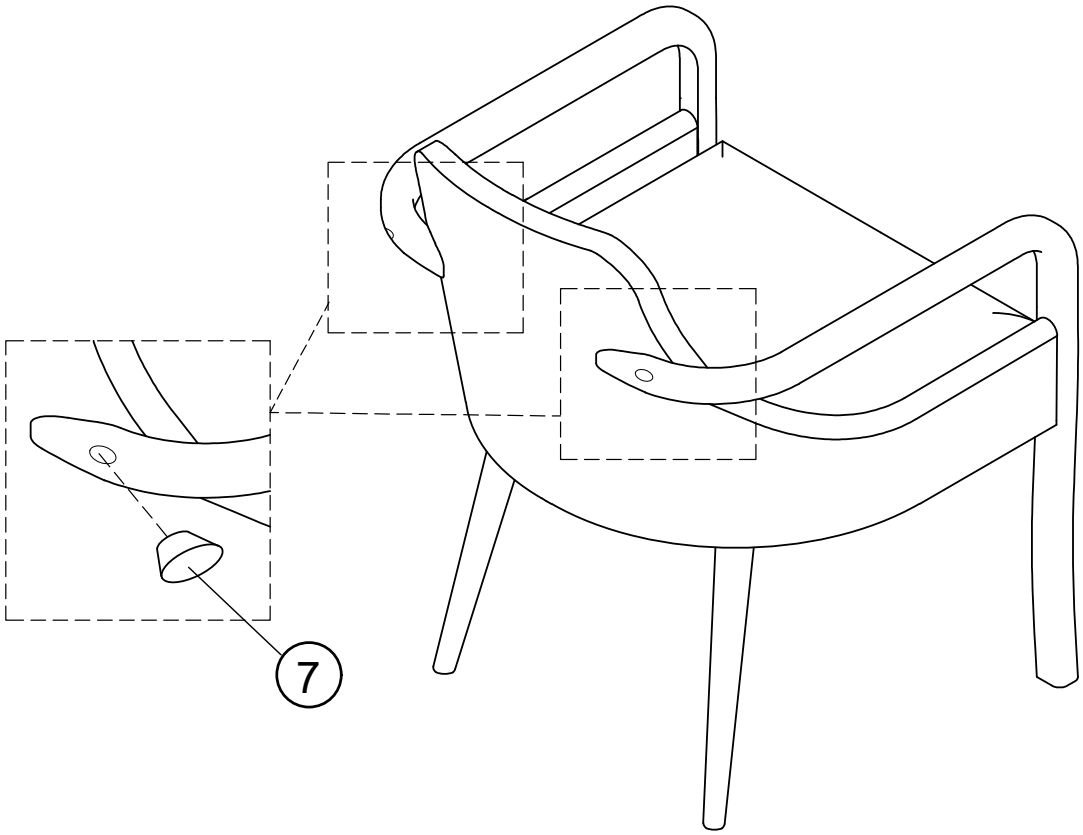

Attach Wooden button (7) on the Front Left Leg(B),Front Right Leg(C).

Step 5

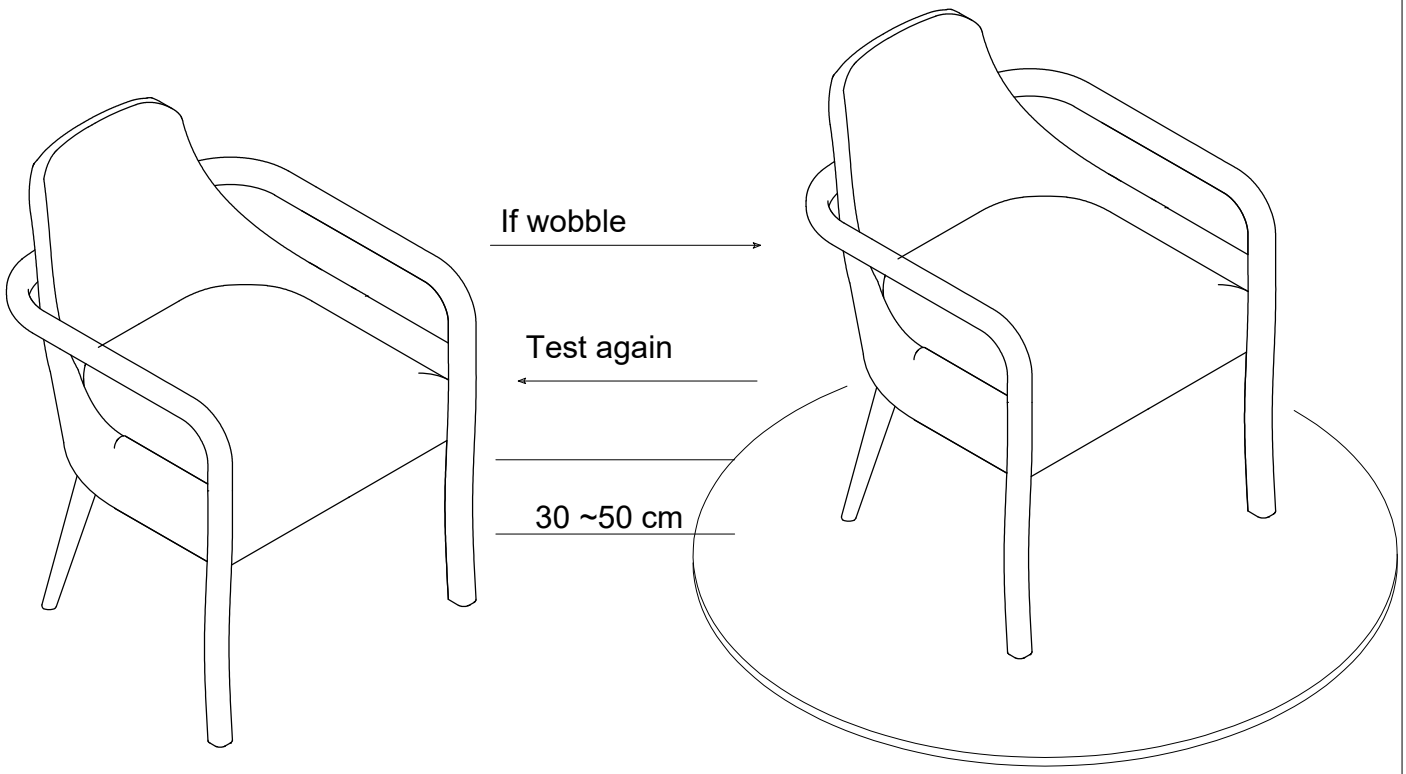

Place the dining chair on a LEVEL SURFACE to check for wobbles.
If it wobbles, lift the dining chair to some 30cm to 50cm in height from the ground.
Keep your feet and toes well away from the drop zone.
drop the dining chair freely and vertically with the four legs, hitting the ground, all at the same time.
This drop test will help to ensure that all the bolts and gaps all reach full alignment status.
Test again for evenness on a LEVEL SURFACE.
If no wobbles are found, slowly and steadily turn the dining chair upside down.
Then, proceed to tighten all bolts in a sequential manner.
CAUTION: When tightening these bolts, tighten sequentially.
DO NOT tighten any screw fully and then towards the next one.
This would cause the frame to warp.
If there is still wobbles, loosen the bolts and execute these same drop tests.
WARNING!! IF Dining CHAIR IS NOT STABLE, IT COULD LEAD TO DAMAGING THE PRODUCT.

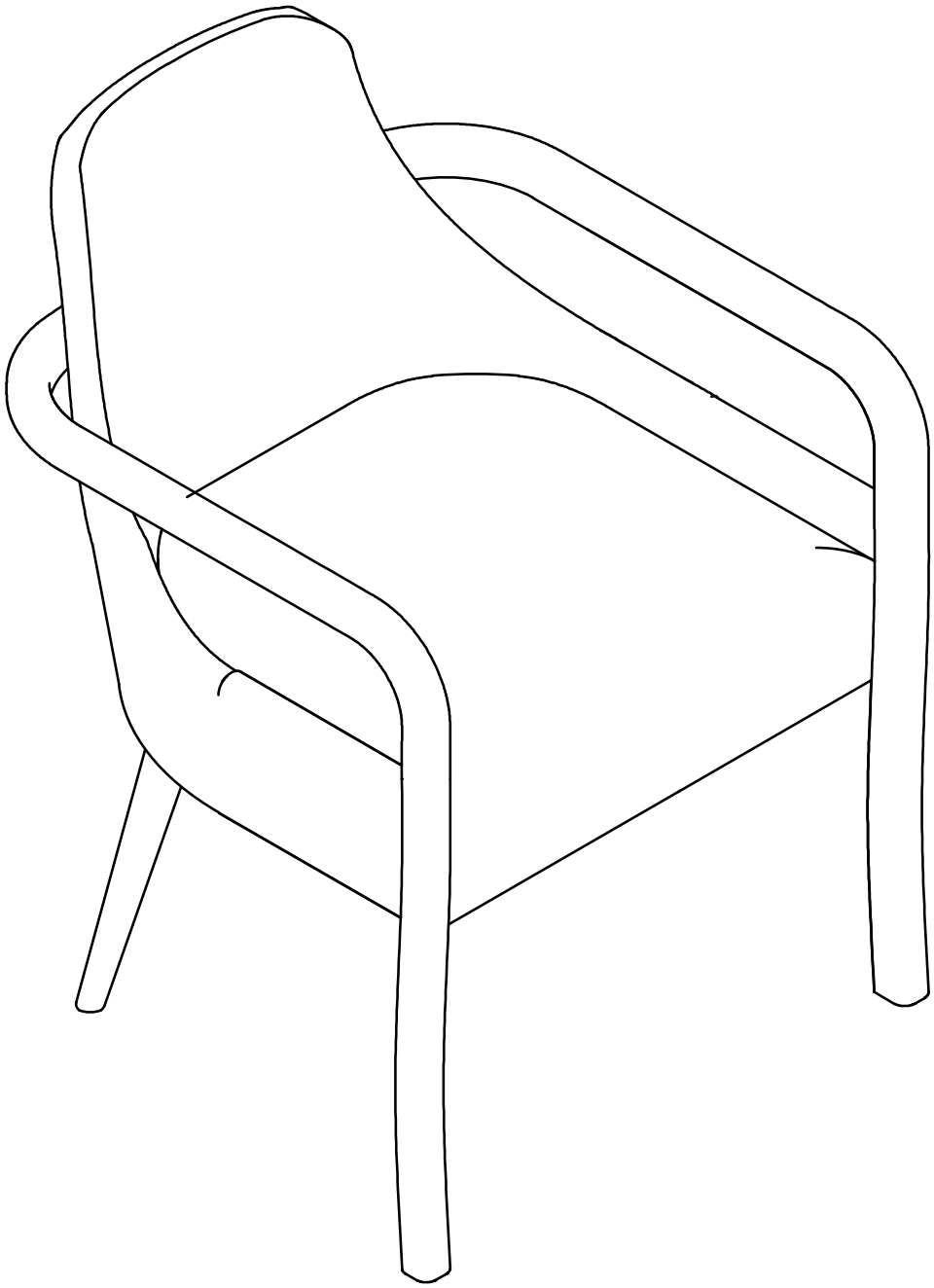

Your chair is ready for use .
This chair can only be used on a flat, level surface.