Vinnova Zanica Vanity Collection 709172

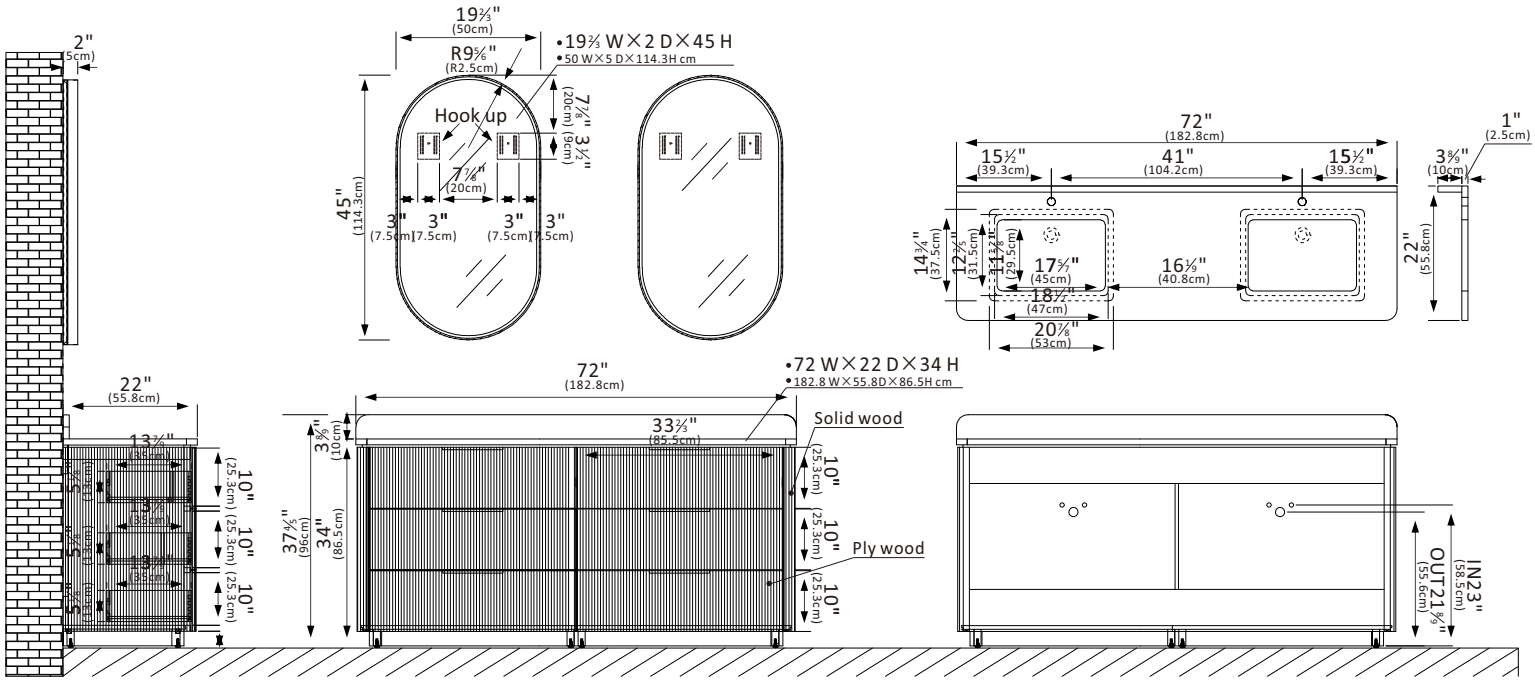

Features

●Durable Materials: Crafted from natural, imported poplar, birch solid wood and plywood for superior durability and enduring beauty. Made from natural materials, each piece features unique variations in color, grain, and size. These details make every vanity one of a kind.

●Stunning Finish: Available in Oak Light Walnut or Classic Grey Brown finish, each piece showcases the wood's inherently fluid, organic grain patterns to complement your décor, using environmentally friendly paint products. The result is a warm, sophisticated aesthetic with timeless appeal, designed to seamlessly integrate with and elevate a diverse range of interior décors.

●Structure: Adopting an embedded pedestal design, the product relies on an understated and luxurious visual language to greatly enhance its modern appeal.

●Ample Storage Space: 6 full-extension, soft-close solid wood drawers withdovetail joinery feature masterfully crafted hardwood and walnut panels with a lovely fluted design. Inside the drawers is ample room for all your toiletries.Built-in removable partition storage within the top drawer allows you to keep items neatly organized.

●High-Quality Hardware: Sleek, minimalistic, brushed gold or matte black finish wide handles add a cool touch of style and contrast against the textured wood, enhancing the dresser's clean and modern aesthetic. Soft-close glides deliver noise-free user experience. (Handles come as shown; no customization options are available)

●Modern Top: 1.0"-thick, white grain composite stone top with 4.0"H backsplash lends a fresh and contemporary look. The countertop is scratch-resistant, wear-resistant, and easy to clean with the high- gloss, anti-fouling coating.

●Nano-Coated Basin: Two rectangular bright white Nano anti-fouling coating ceramic undermount basins with overflow blends seamlessly with the stone vanity top.

●Faucet Configuration: Countertop design features a precision pre-drilled 1-3/8-inch faucet hole, engineered to fit all standard U.S.-market faucet types and compliant with national plumbing installation standards for hassle-free setup (Faucet sold separately).

●Accessories: Does not include mirror (sold separately), faucet, all plumbing components (drain, P-trap), or storage cabinet.

●No Assembly Required: Freestanding bathroom vanity (without back panel) comes fully assembled for your convenience. Designed for easy, no-hassle plumbing and faucet installation.

●Attention: The countertop shall be maintained in a state of maximum dryness. We recommend cleaning the engineered stone countertop with only water and a soft cloth to wipe. We DO NOT recommend using dish soaps, cleaners and detergents.

●Full Warranty: 1-Year Manufacturer Warranty—purchase with 100% peace of mind.

●Country of Origin: Vietnam

VINNOVA
FASHION BATHROOM LIFE