Assembly Instructions

CAUTION: You must read these Assembly Instructions before you proceed.

Care & Maintenance

- Not for commercial use. For residential use only.
- Do not put hot items directly on furniture surface.
- Do not clean furniture with harsh cleansers or polish.
- To obtain the longest lifespan of your outdoor products, minimizing exposure to direct sunlight is recommended.
- Children should not climb or jump on the furniture.
- Do not write on furniture without a padded barrier to protect the surface.
- To obtain the longest lifespan of your outdoor products, avoid extended and lengthy exposure to rain, snow, and direct sunshine. Whenever possible cover the product and /or place under patio or awnings.
- Stains may be removed with mild soap solution and damp cloth.

- Dust and pick-up spills using a clean, non-colored, lint-free cloth.

Please look under the Seat Panel for hardware pack.

Loveseat

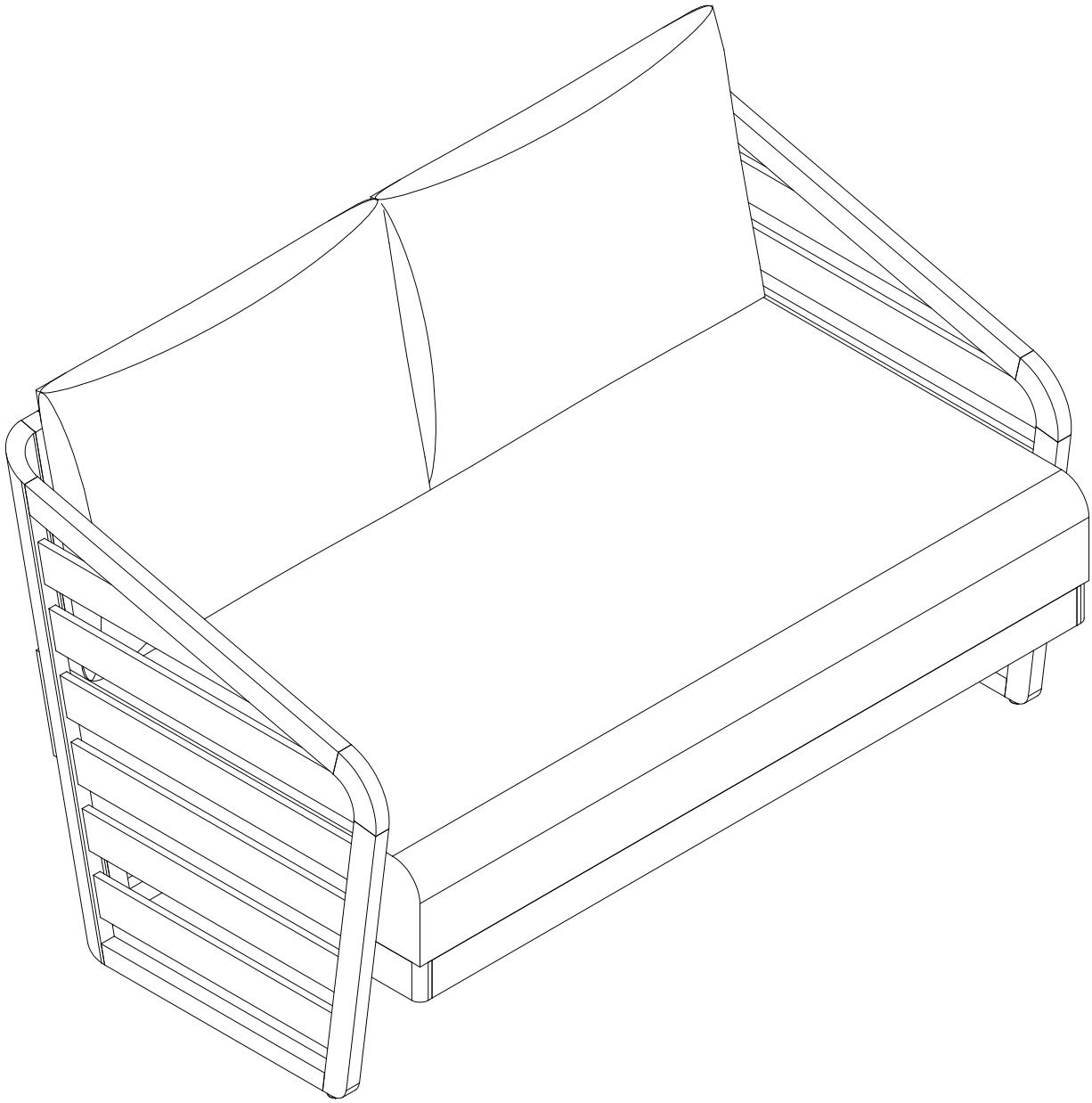

CAUTION: This Loveseat is NOT a TOY
Keep your child/children at bay during the assembly process.
Whenever moving/lifting the Loveseat and to prevent damage to the Loveseat, two adults are needed to execute these actions.

Parts List

Label	Picture	Description	QTY
A	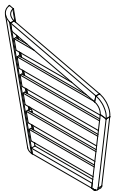	Left Leg Panel	1
B	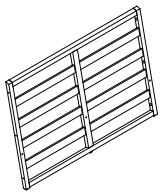	Backrest Panel	1
C	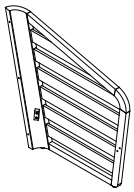	Right Leg Panel	1
D	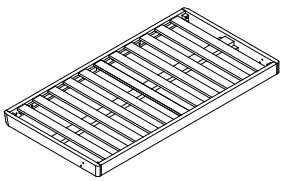	Seat Panel	1
E	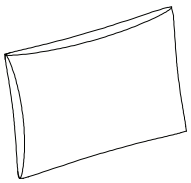	Back Cushion	2
F	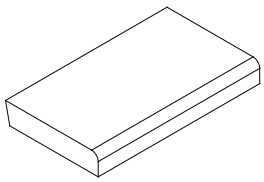	Seat Cushion	1

Hardware

Label	Picture	Description	QTY
①	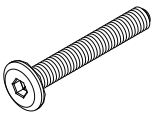	Bolt (M6x40mm)	11
②	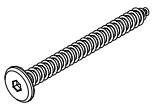	Screw (M6x60mm)	4
③		Washer	5
④	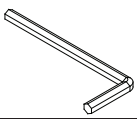	Allen Wrench	2

Assembly Preparation

Before Beginning Assembly:

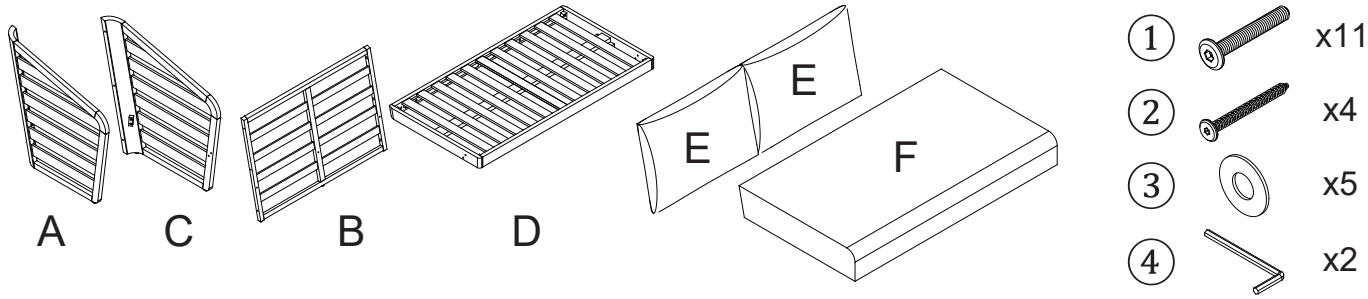

- Read instructions, cover to cover.
- Have 2 adults on hand for assembly.
- Do not assemble on flooring or carpet.
- Assemble on a clean non-marring surface (packing foam).
- Save all packaging until finished.

Assembly Steps

Overview

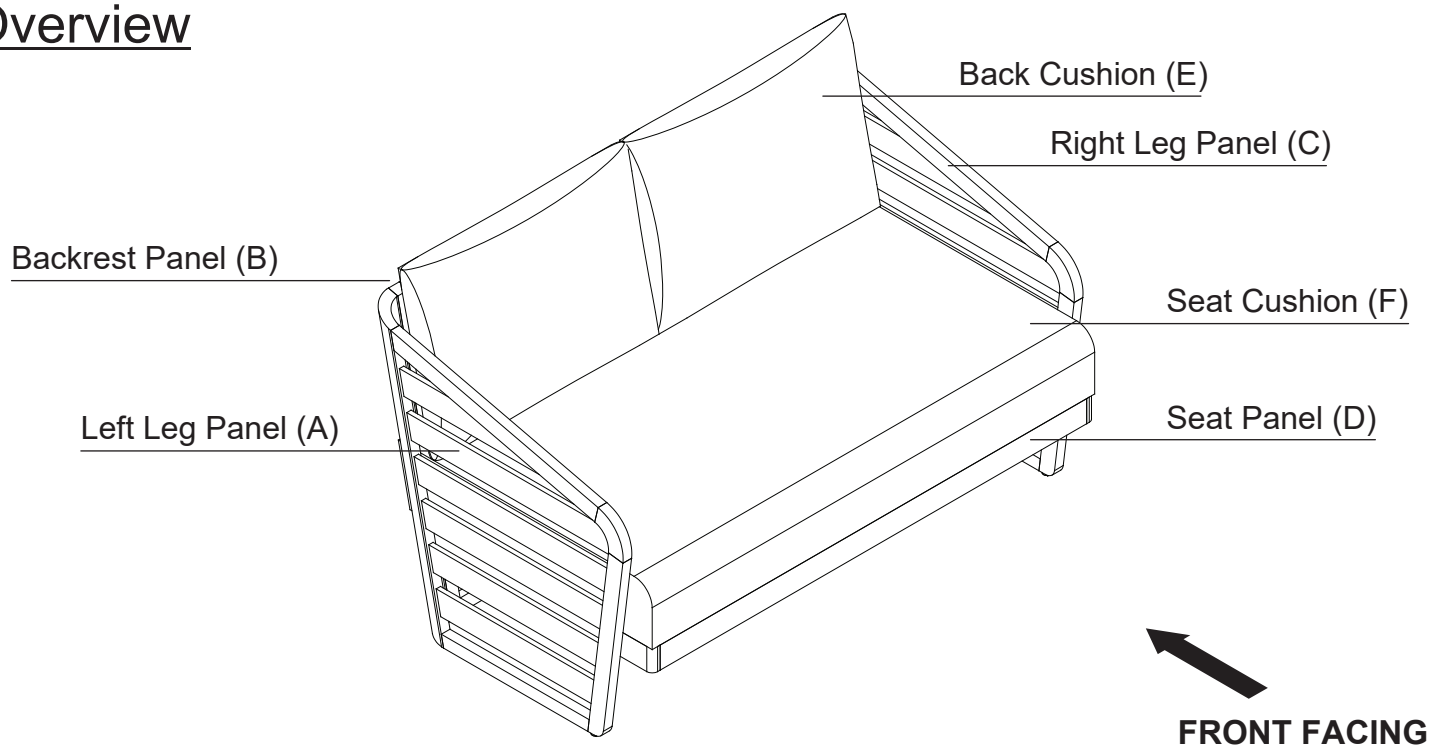

This Loveseat has multiple parts and may require up to 30 minutes to assemble. To give you an overview of the Loveseat parts, the above picture is to help you put the various parts into perspective. Please read through the instructions below to familiarise yourself with the parts and steps before assembly.

Step 1

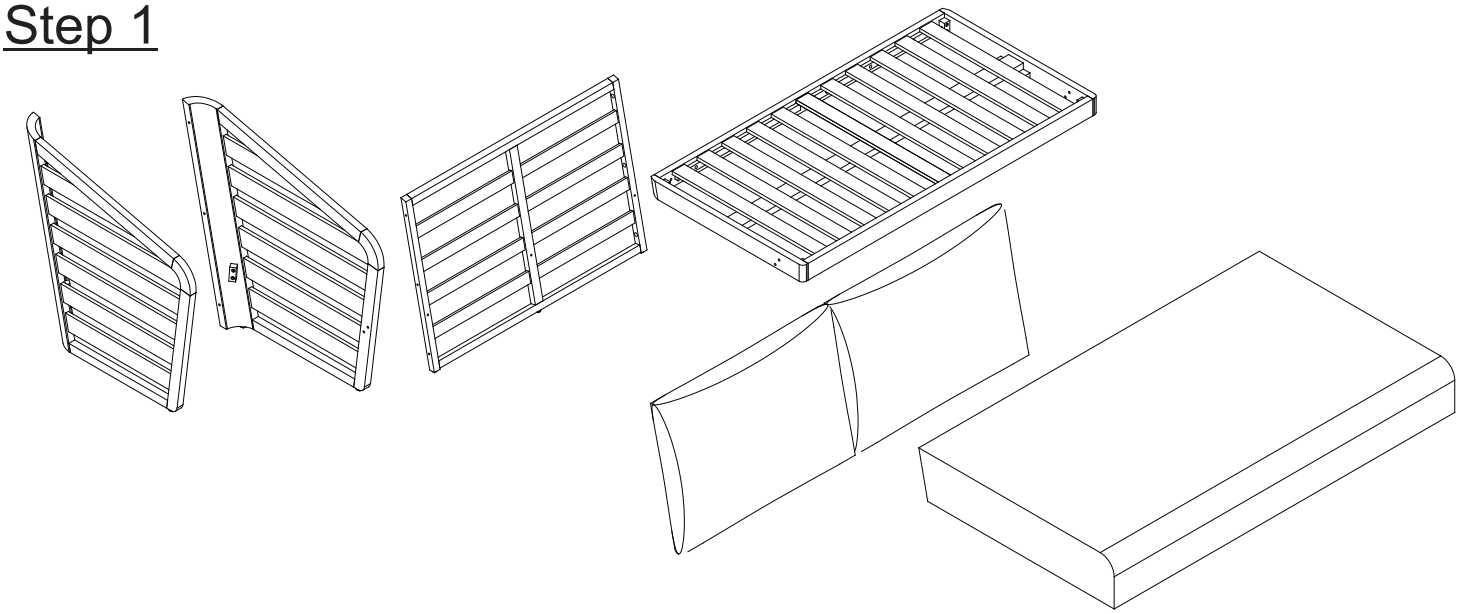

Unpack and place all parts on a clean, non-marring surface.

Step 2

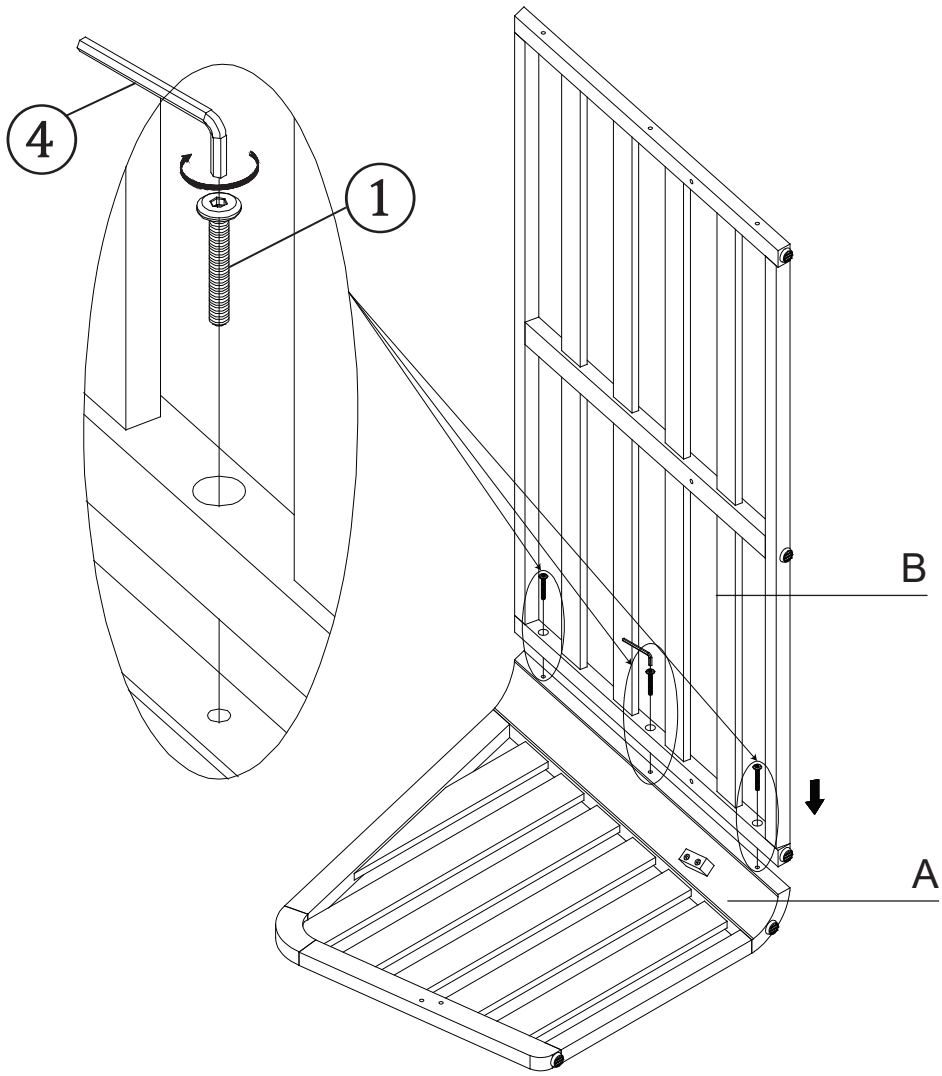

Place the Left Leg Panel (A) facedown onto a clean, non-marring surface.
Align Backrest Panel (B) to Left Leg Panel (A) then attach using Bolts (①), Allen Wrench (④) as show above.
Do not fully tighten the Bolts.

Step 3

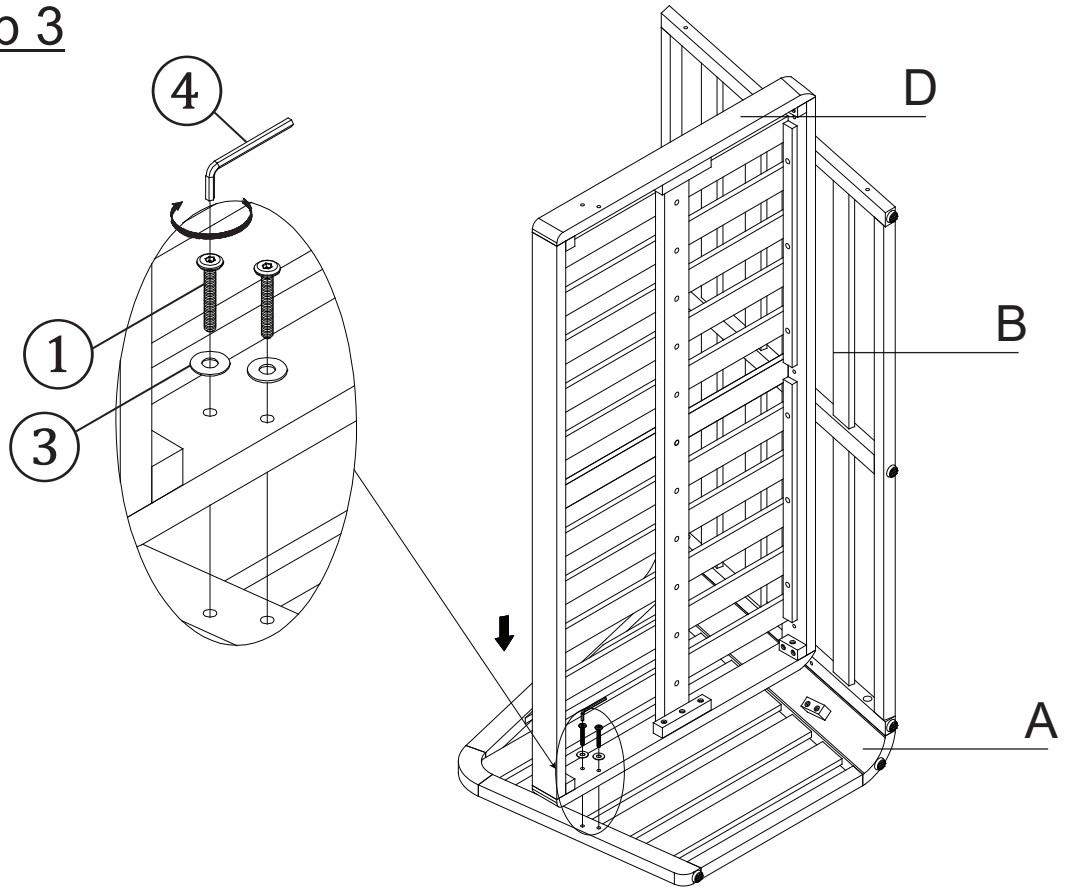

Attach the Seat Panel (D) to the Left Leg Panel (A) using Bolts (①), Washers (③) with Allen Wrench (④) as show above.
Do not fully tighten the Bolts.

Step 4

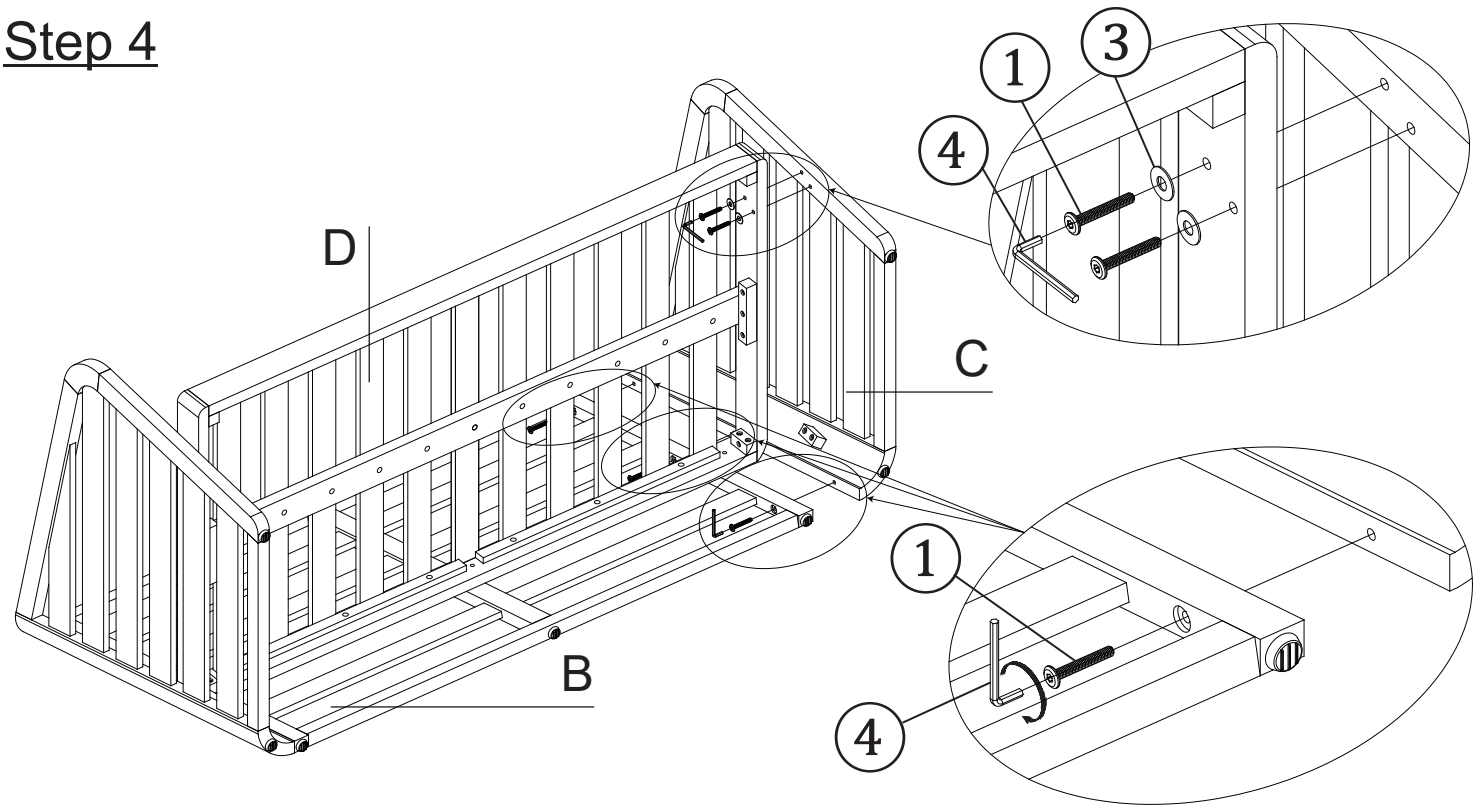

Turn the Loveseat as show above. Attach Right Leg Panel (C) to Backrest Panel (B), Seat Panel (D) using Bolts (①), Washers (③) with Allen Wrench (④) as show above.
Do not fully tighten the Bolts.

Step 5

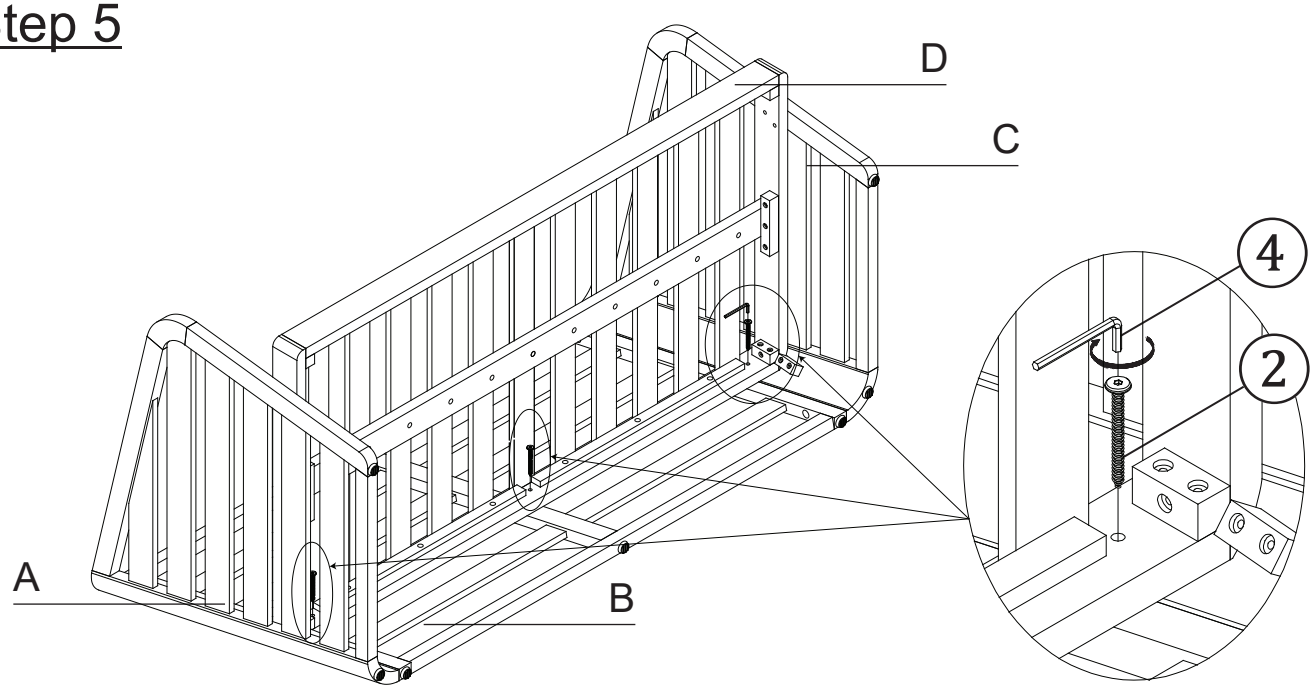

Secure the Screws (②) with Allen Wrench (④) to the Seat Panel (D), the Backrest Panel (B) as show above.
Do not fully tighten the Screws.

Step 6

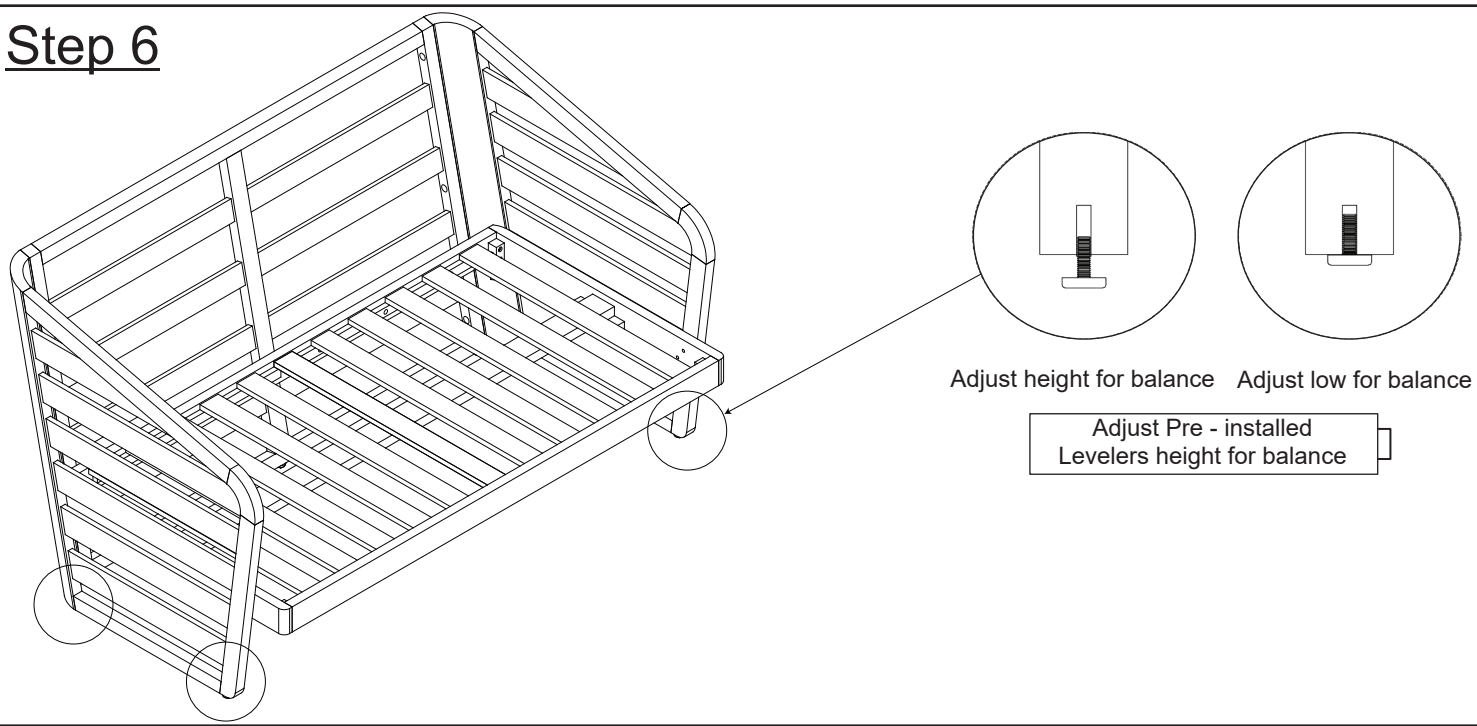

Place the Loveseat onto a flat, level surface.
Then EXERT pressure floorward onto the Loveseat with both hands.
This pressure will help the Loveseat reach full alignment at all joints.
In a sequential manner, gradually **tighten all Bolts and screws at all joints** until evenly secured.
Inspect the Loveseat and make sure all parts are adequately connected.
Adjust the Levelers until the Loveseat is level with the ground.
To adjust the Levelers, get assistance from an adult partner to lean and hold the Loveseat while you are working.

Step 7

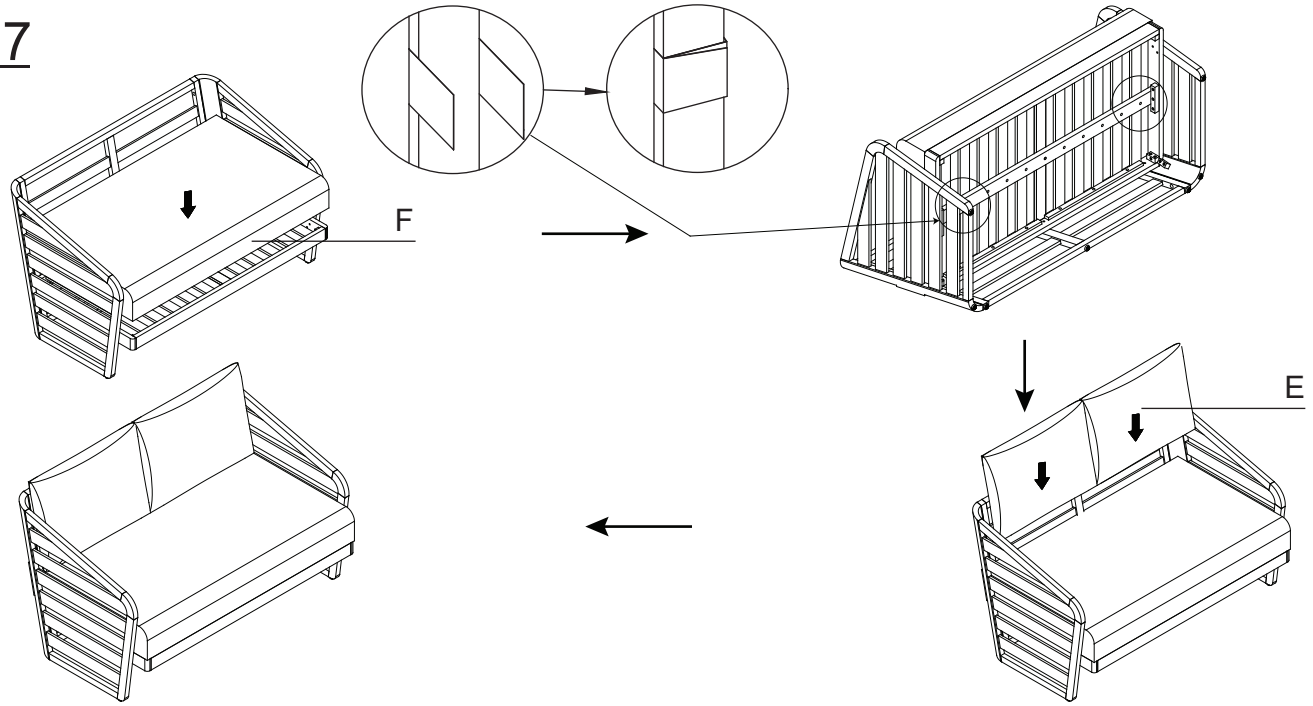

Place the Seat Cushion (F) onto the Loveseat and affix the magic tape straps around the Loveseat as shown above.
Then place the Back Cushion (E) onto the Loveseat.
Your Loveseat is ready to be used.
This Loveseat can only be used on a flat, level surface.

Questions & Answers about Proposition 65

• What is Proposition 65?

Proposition 65 requires businesses to provide warnings to Californians about significant exposures to chemicals that cause cancer, birth defects or other reproductive harm. These chemicals can be in the products that Californians purchase, in their homes or workplaces, or that are released into the environment. By requiring that this information be provided, Proposition 65 enables Californians to make informed decisions about their exposures to these chemicals.

Proposition 65 also prohibits California businesses from knowingly discharging significant amounts of listed chemicals into sources of drinking water.

Proposition 65 requires California to publish a list of chemicals known to cause cancer, birth defects or other reproductive harm. This list, which must be updated at least once a year, has grown to include approximately 900 chemicals since it was first published in 1987.

• What types of chemicals are on the Proposition 65 list?

The list contains a wide range of naturally occurring and synthetic chemicals that include additives or ingredients in pesticides, common household products, food, drugs, dyes, or solvents. Listed chemicals may also be used in manufacturing and construction, or they may be byproducts of chemical processes, such as motor vehicle exhaust.

• What does a warning mean?

If a warning is placed on a product label or posted or distributed at a workplace, a business, or in rental housing, the business issuing the warning is aware or believes that it is exposing individuals to one or more listed chemicals.

By law, a warning must be given for listed chemicals unless the exposure is low enough to pose no significant risk of cancer or is significantly below levels observed to cause birth defects or other eproductive harm.

• Where can I get more information on Proposition 65?

If you have specific questions on the administration or implementation of Proposition 65, you can contact OEHHA's Proposition 65 program at P65.Questions@oehha.ca.gov, or by phone at (916) 445-6900.