Owner Manual

NOTICE

* Please make sure that you have all parts indicated and they are in good condition before you begin assembly of this item. Refer to part list and hardware list below for guidance.
* This item should be assembled on a soft surface to prevent scratching the finish during assembly.
* This item may require periodic tightening.

PREPARATION

*Before beginning assembly of product, make sure all parts are present. Compare parts with part contents list and hardware contents list.

*If any part is missing or damaged, do not attempt to assemble the product.

*Estimated Assembly Time:10 minutes.

*If you are having difficulty, our friendly Customer Care team is always here to help.

CARE AND MAINTENANCE

Unplug lamps before using any cleaning solutions. Dust shades with a feather duster or with an appropriate vacuum-brush attachment. Wipe with a soft, dry cloth and clean lamp bases with the methods appropriate to the material.Avoid the use of chemicals and household cleaners as they may damage the finish.

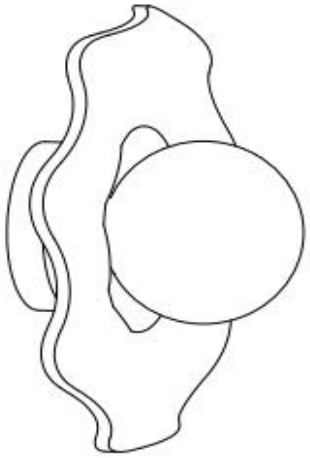

Part List and Hardware List

PEICE	DESCRIPTION	PICTURE	QUANTITY
A	Canopy		1X
B	Lamp body		1X
C	Mounting Plate		1X
D	Socket		1X
E	Shade		1X

PEICE	DESCRIPTION	PICTURE	QUANTITY
HW1	Screw ϕ4*25mm		2X
HW2	wire connector		3X
HW3	Screw ϕ4*12MM		2X
F	Bulb		1X

PREPARATION

* Before beginning assembly of product, make sure all parts are present. Compare parts with part contents list and hardware contents list.
* If any part is missing or damaged, do not attempt to assemble the product.
* Estimated Assembly Time: 10 minutes.

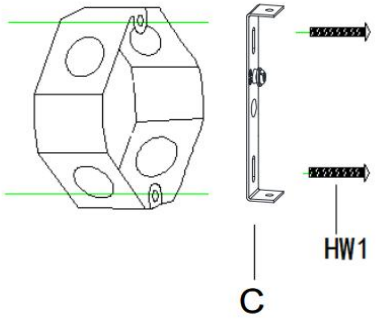

STEP1: Firstly install the Mounting Plate (B) with the (HW1) screw into the junction box.

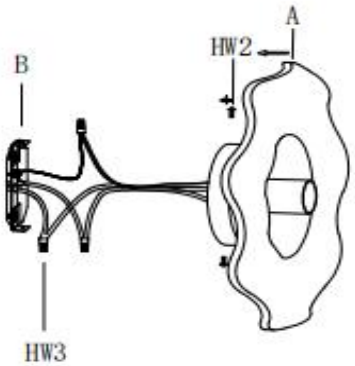

STEP3: Fasten the Mounting Plate (B) through the Lamp Body (A) with a screw (HW2).

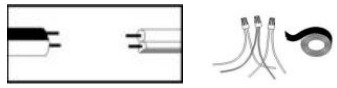

Connect,Hot,Black or Red outlet Supply Wire to:	Connect,Neutral,White Outlet Supply Wire to: Black White
Black	White
*Parallel Cord(round&smooth)	*Parallel Cord(square&ridged)
Clear,Brown,Gold or Black without Tracer(colored stripes)	Clear,Brown,Gold or Black without Tracer(colored stripes)
Insulated Wire(not green)with copper metal conductor	Insulated Wire(not green)with Silver metal conductor

STEP2: To connectfixture wires: Connectthe live wire (L) from fitting to the live wire from main powersupply. Connectthe neutral wire (N) from fitting to the neutral wire frommain powersupply.make the wire connector(HW3) connect the ground wire. Please pay close attention to avoiding the wires exposingoutside when wiring connections.

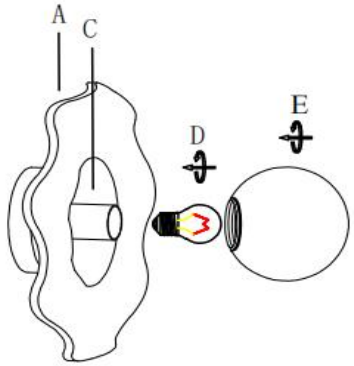

STEP4: Securely install the Light bulb (D) to the socket (C).