ASSEMBLY INSTRUCTION

A	B	C	D	E
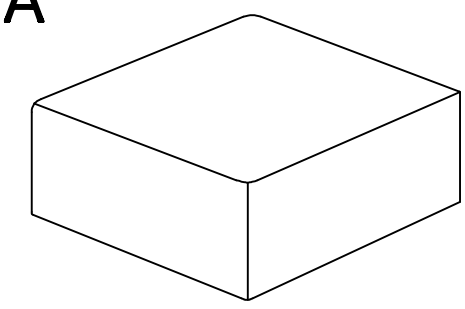 X1	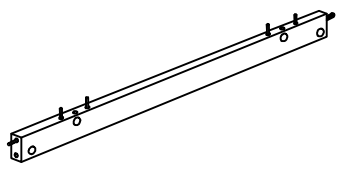 X2	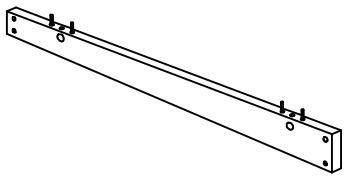 X2	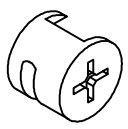 X12	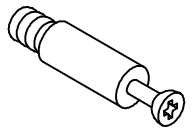 X12

Step 1:

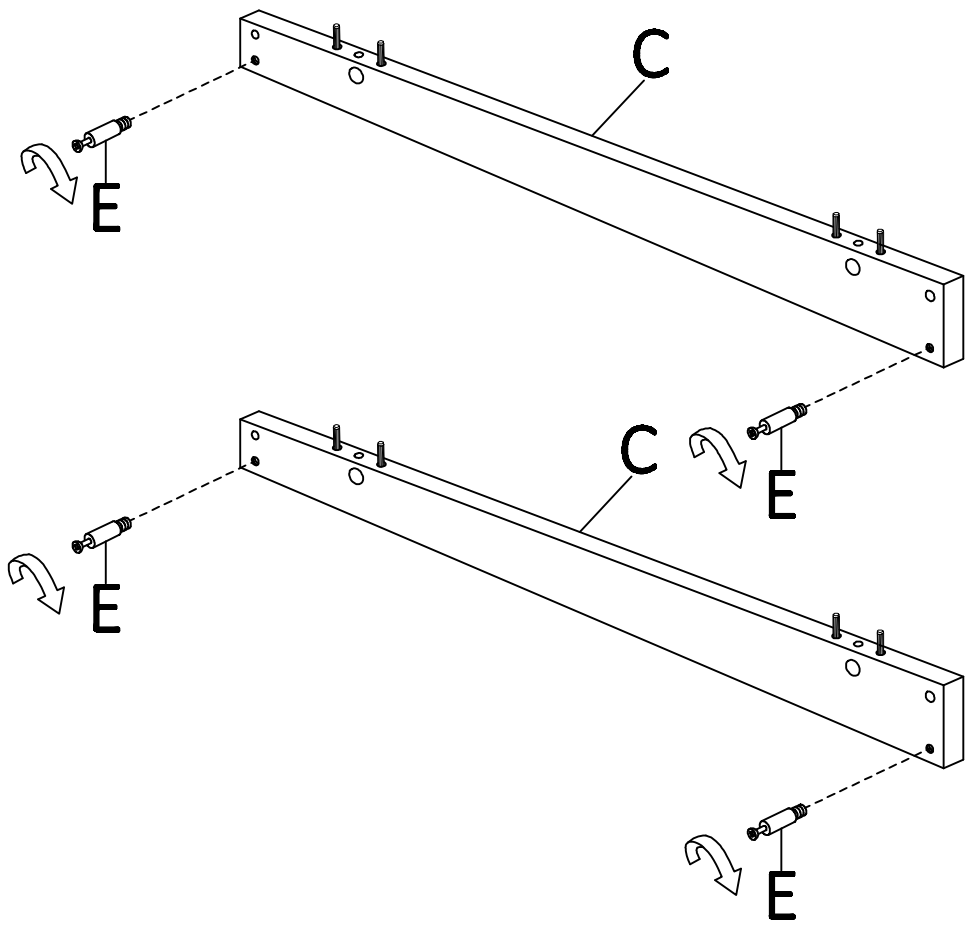

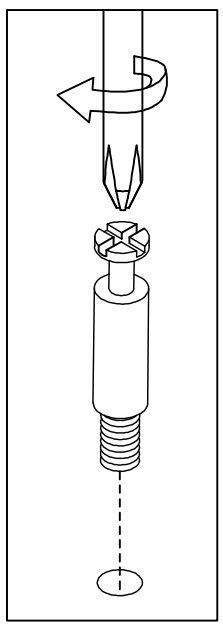

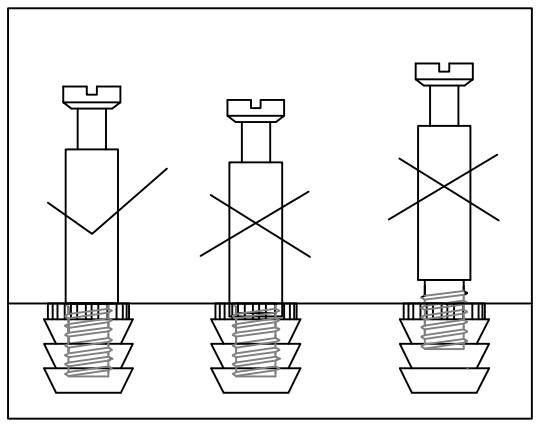

Step 2:

Bottom-base part

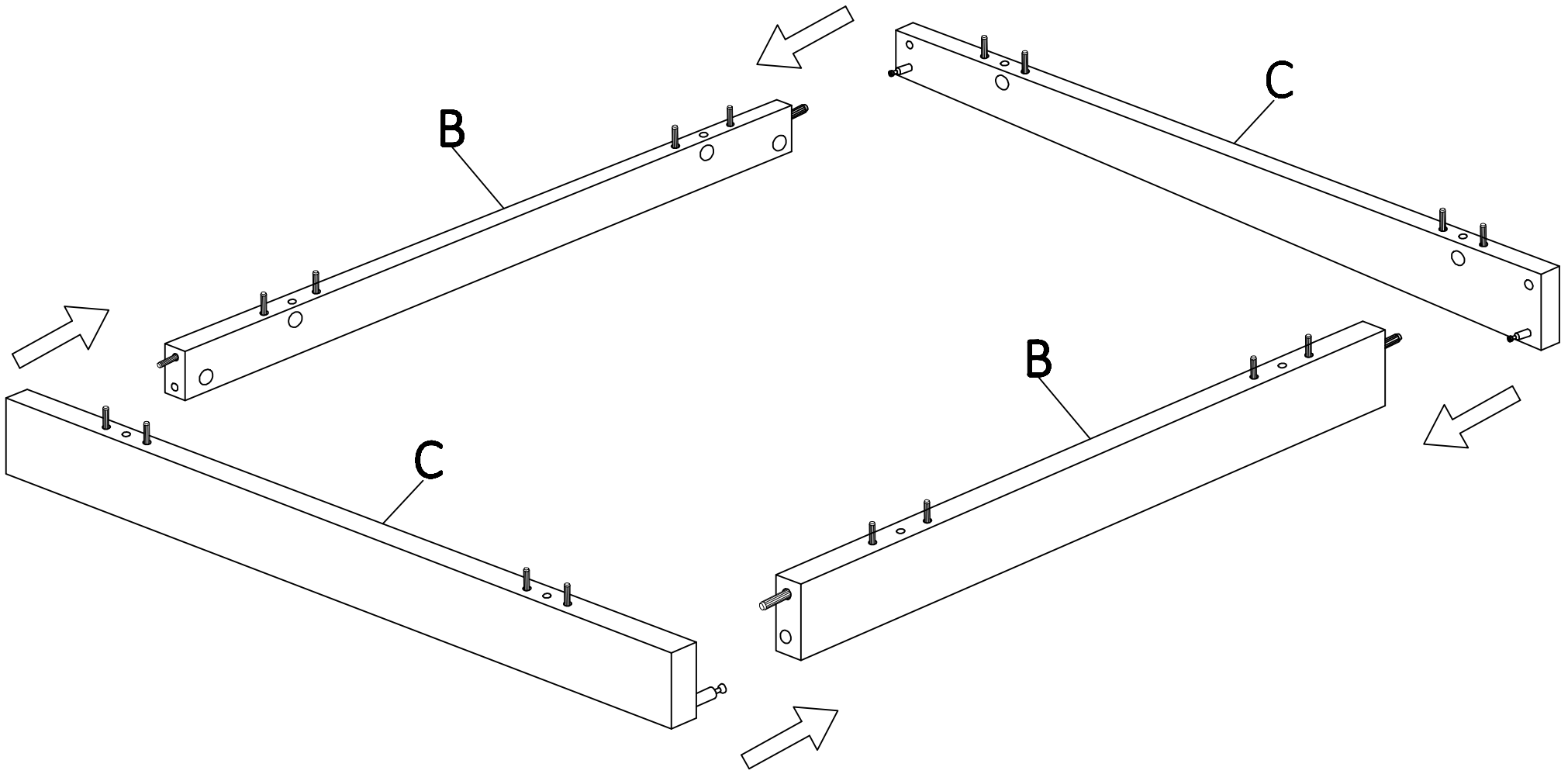

Top-base part

Step 3:

Top-base part

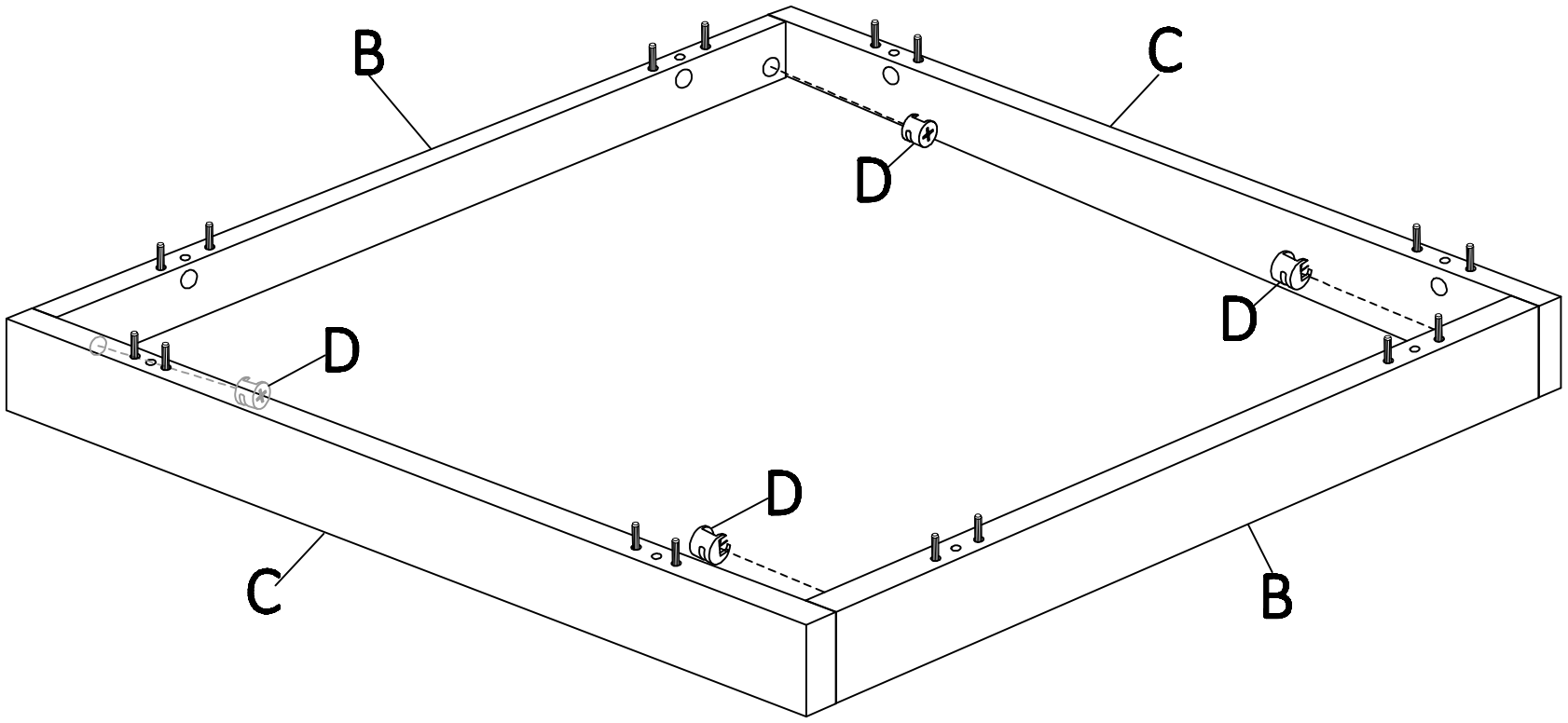

Bottom-base part

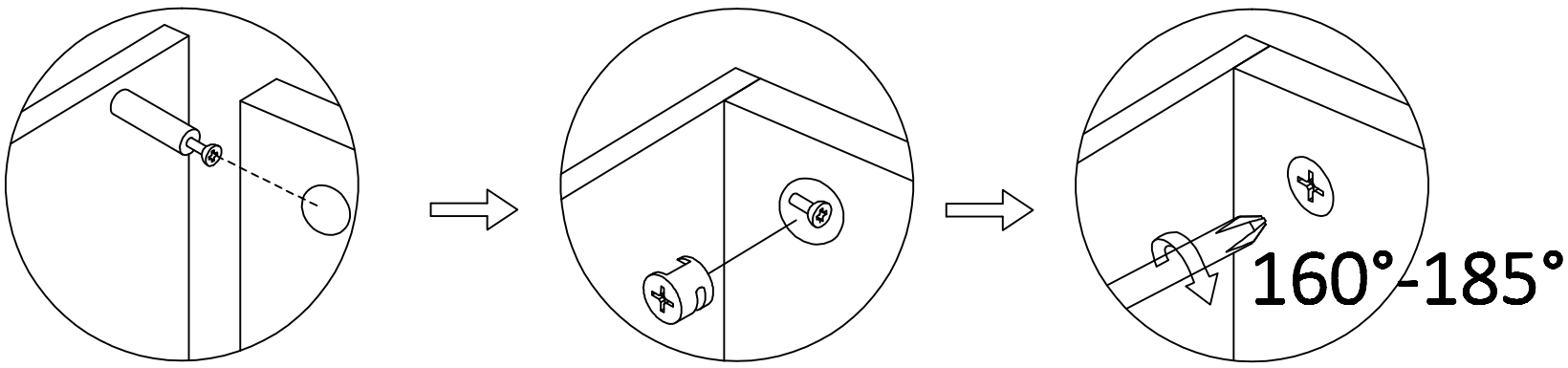

Step 4:

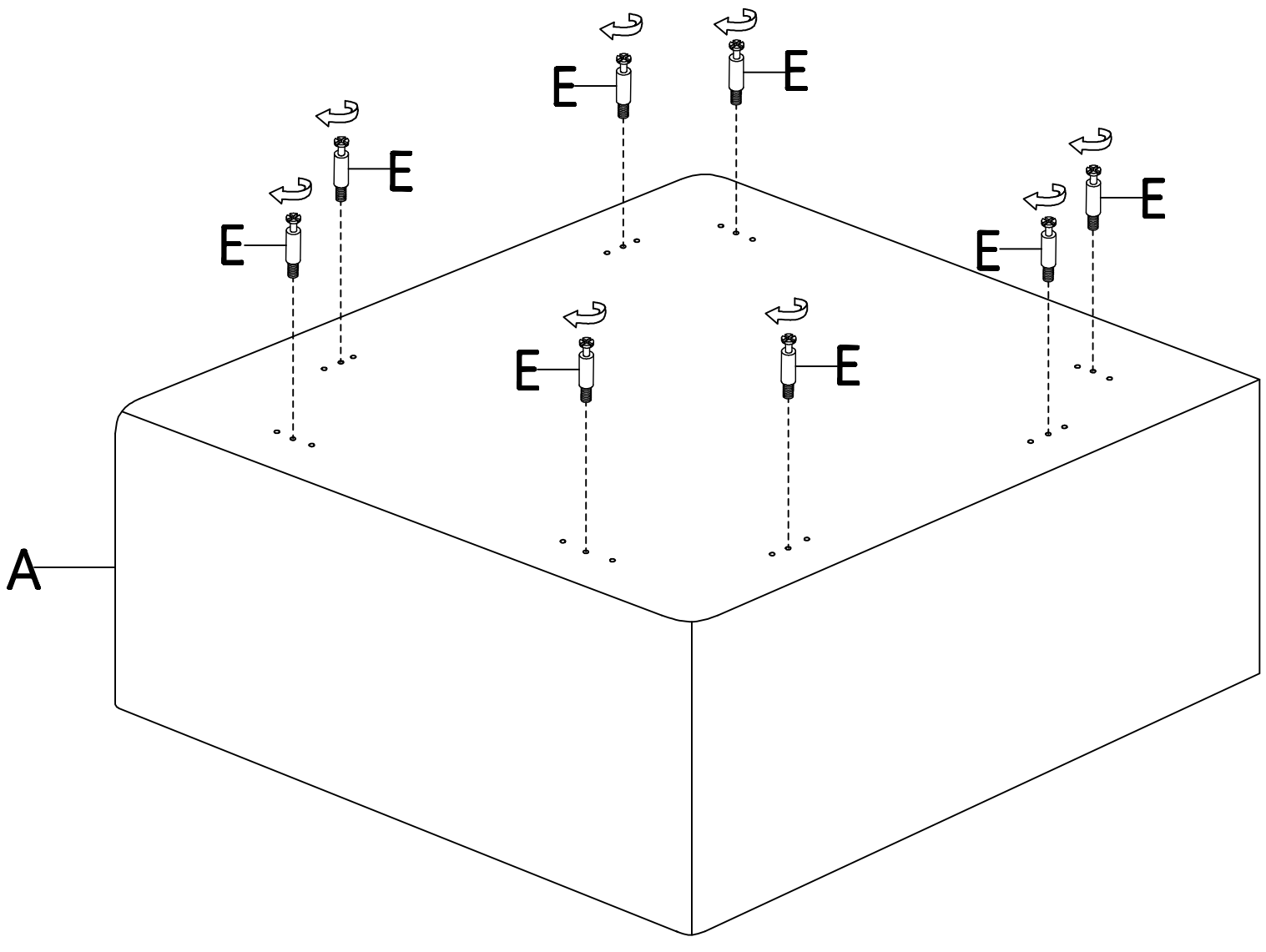

Step 5:

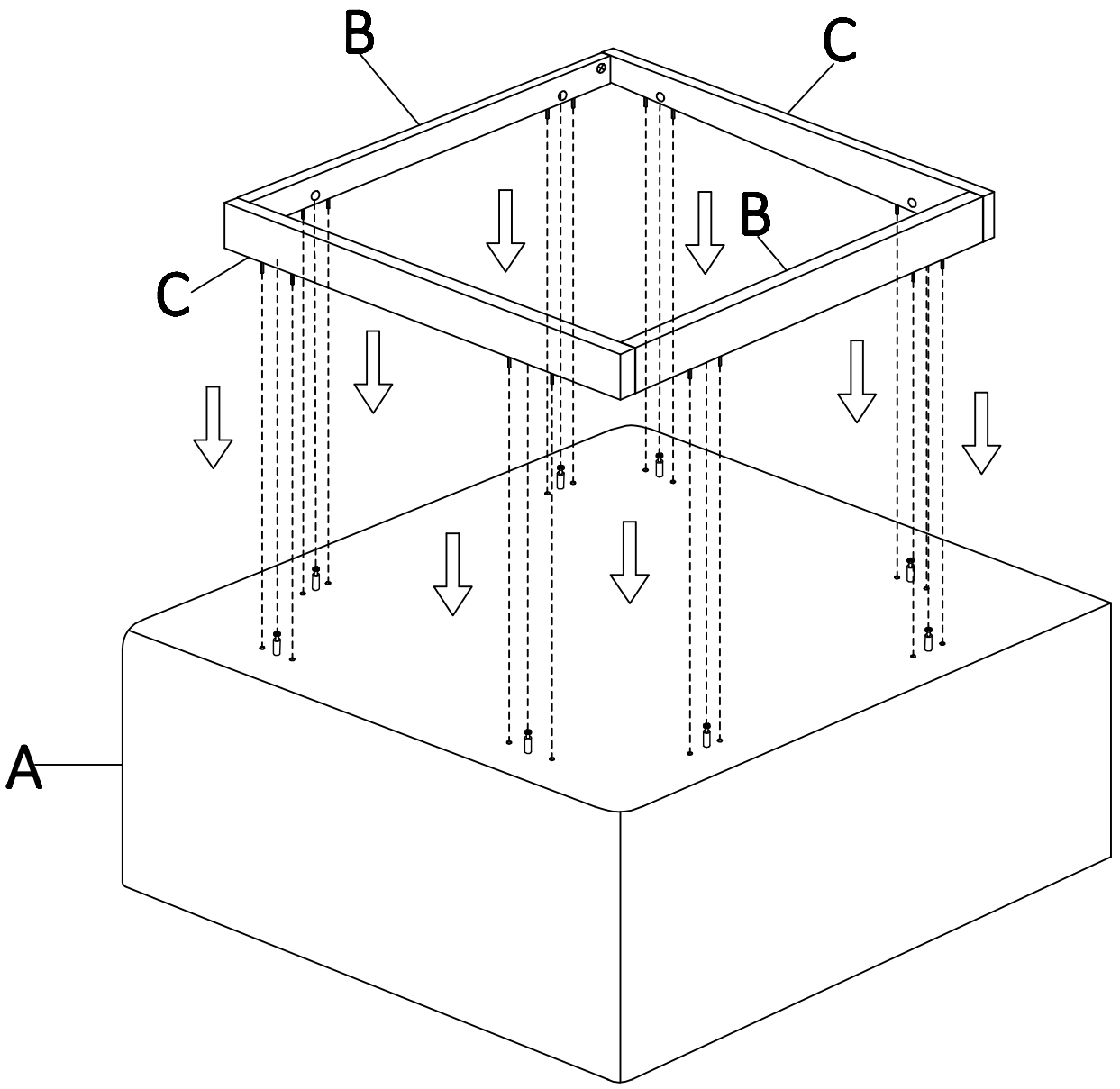

Step 6:

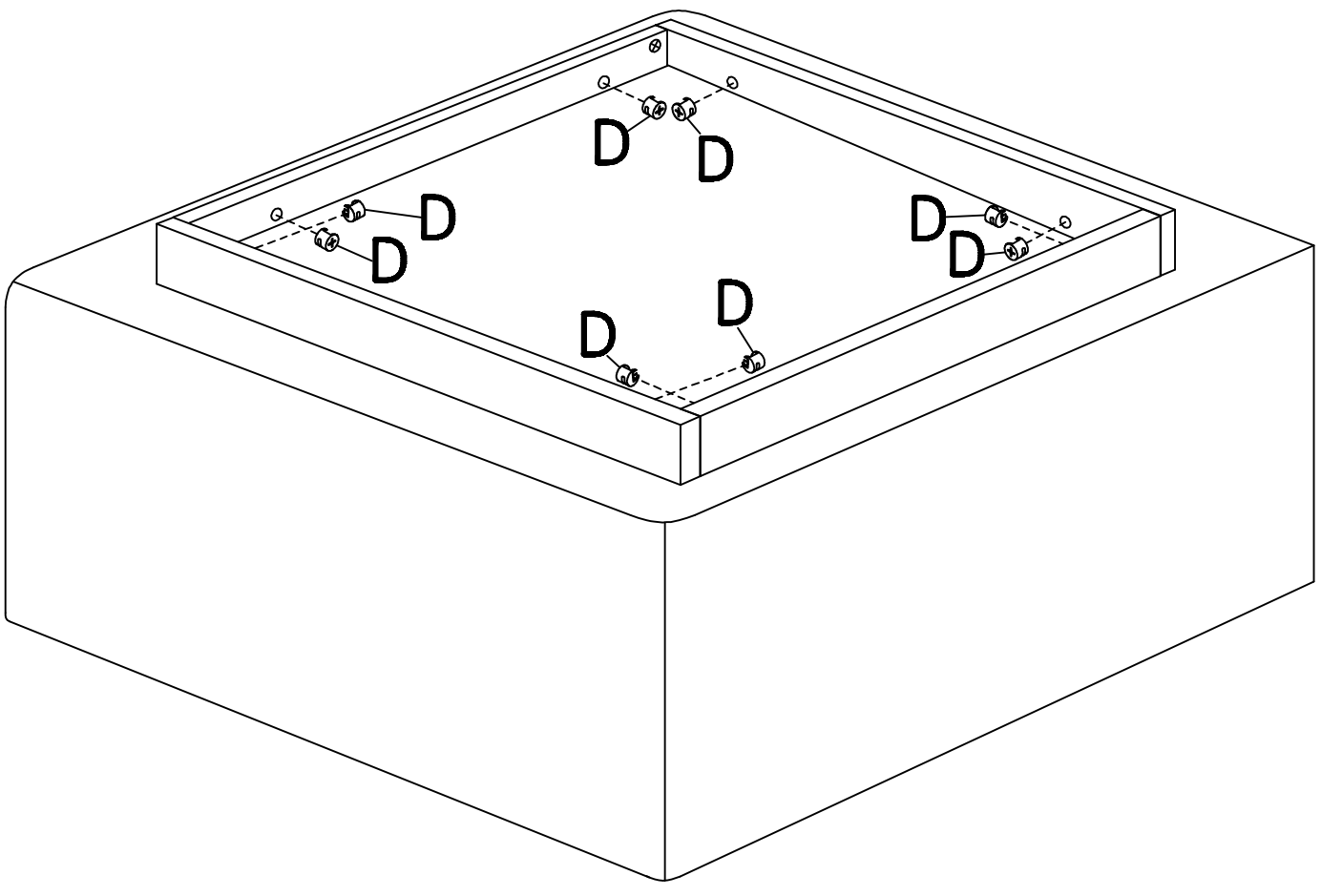

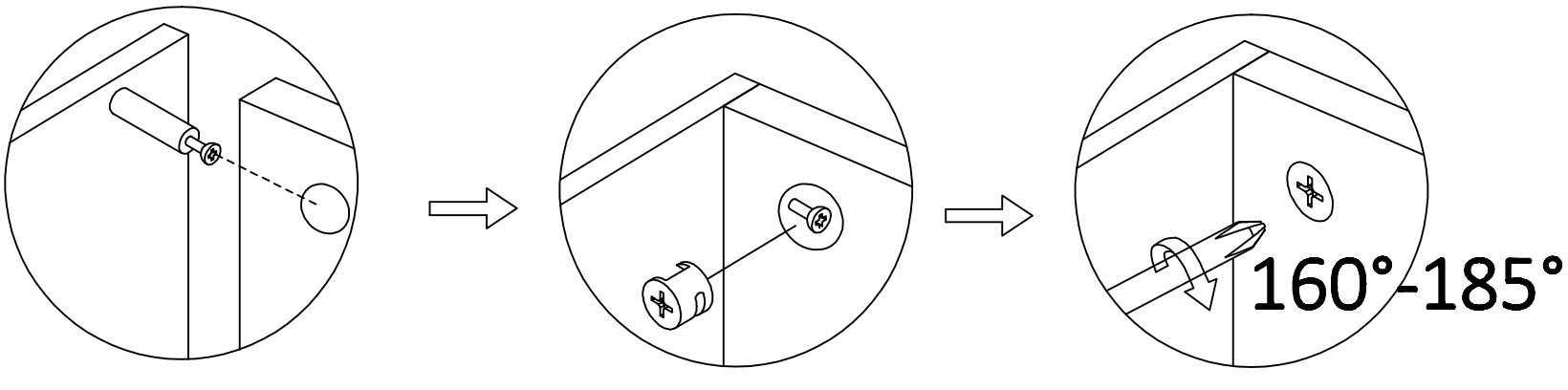

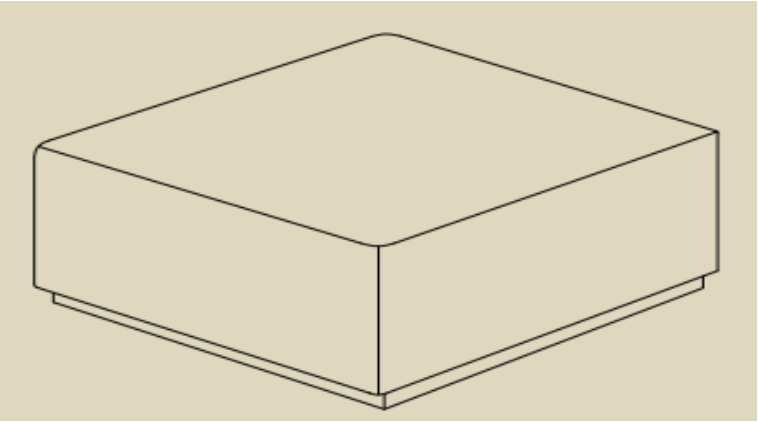

Daily Maintenance Instructions

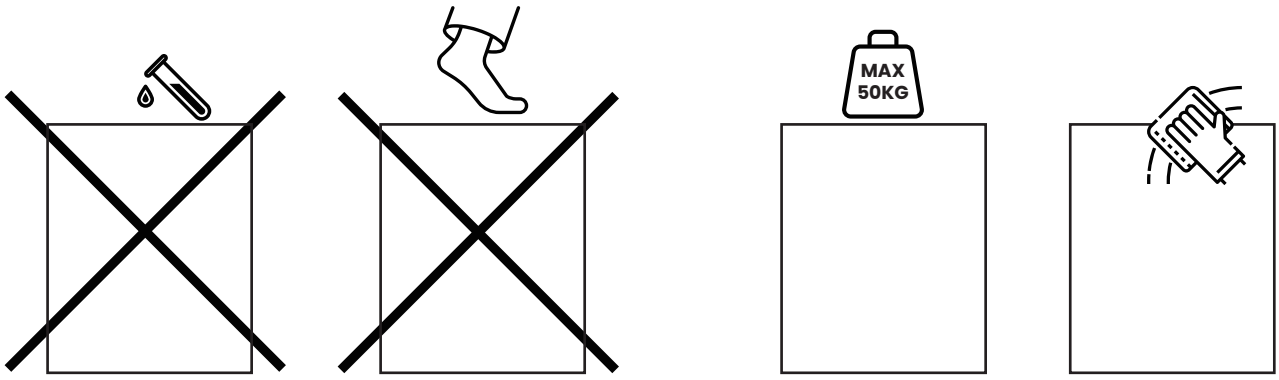

Dust Removal

Please wipe with a damp cloth or rinse with water.

Scratch Repair

Please use the touch up paint (if have) to repair slight scratches.

Scratches Avoided

Please carry the product carefully to avoid contact with sharp or hard objects, which may cause damages or scratches.

Daily Cleaning

Please clean with neutral detergent.

Hazardous Substance Avoided

Please avoid contact with strong acid or alkali, if spilled accidentally, please rinse with water immediately.

Safety Reminder

Please pay attention to the weight capacity and avoid children jumping on the product.

It is recommended to store the product when not in use (over one month), protecting the possible damage from harsh weather. Proper protection can prolong its life span.