Assembly instructions

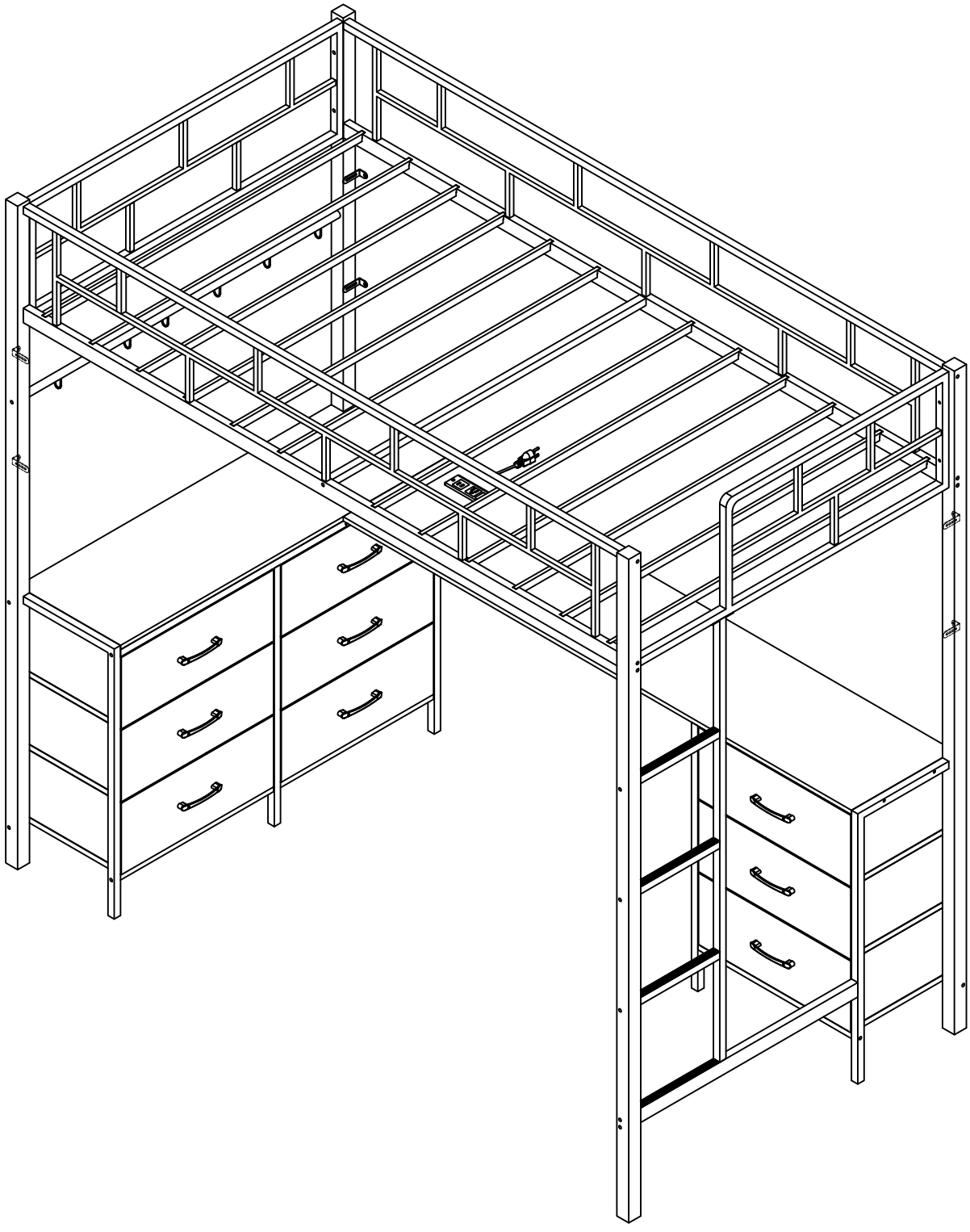

Parts List

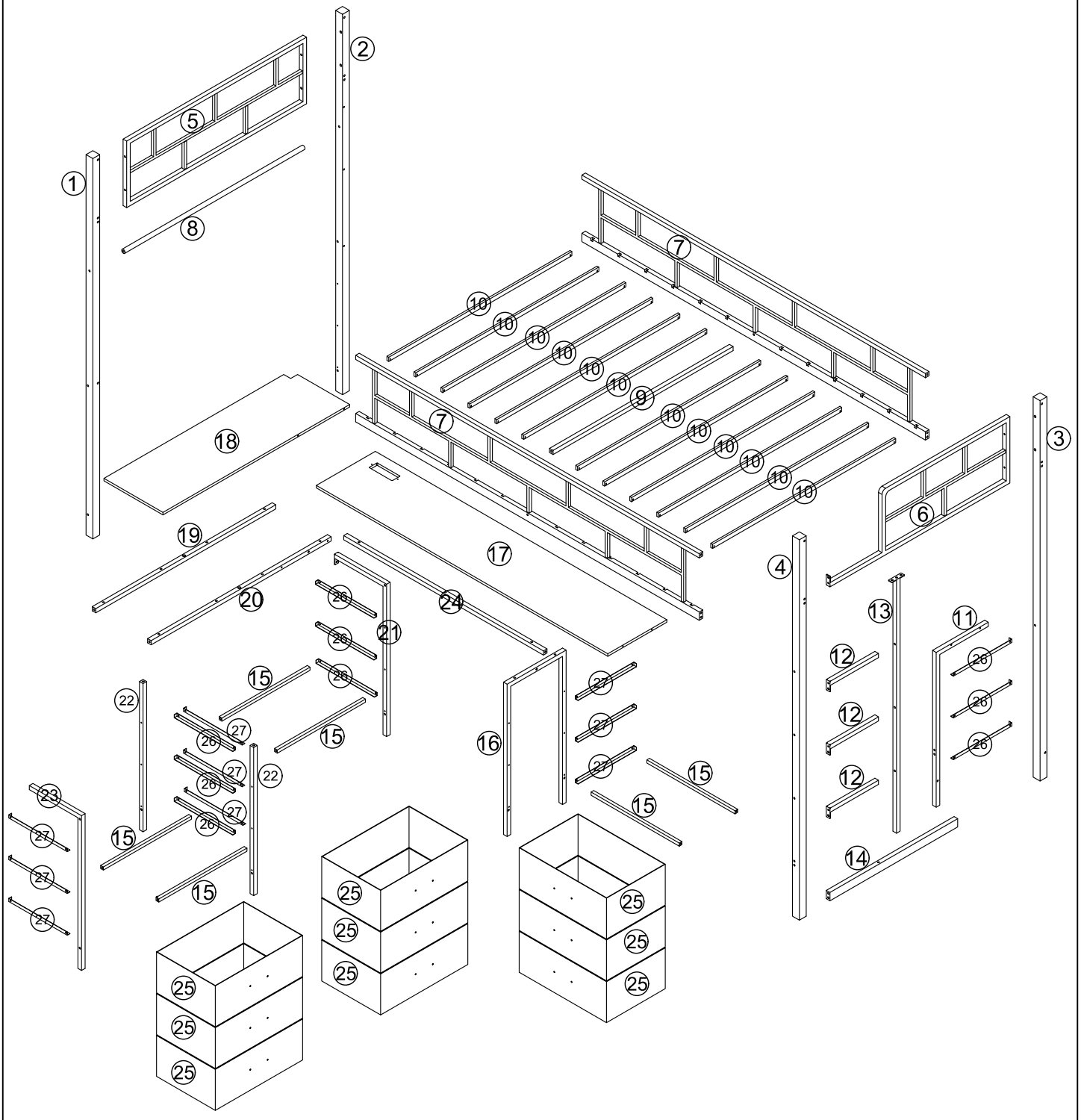

Parts List / Teile Liste

1 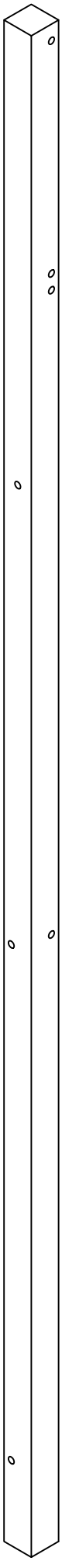 ×1	2  ×1	3 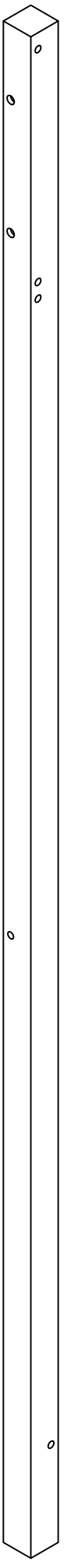 ×1	4 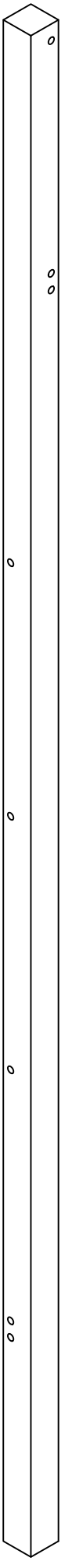 ×1

Parts List / Teile Liste

5 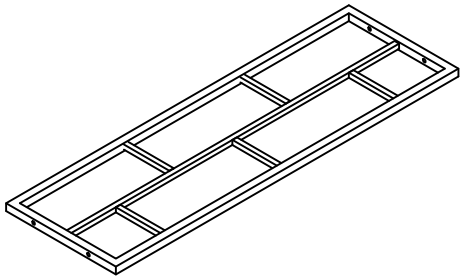 ×1	6 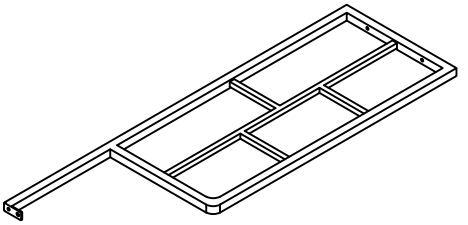 ×1	7 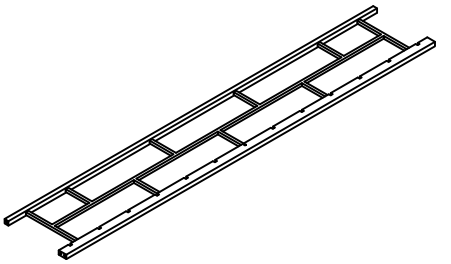 ×2
8 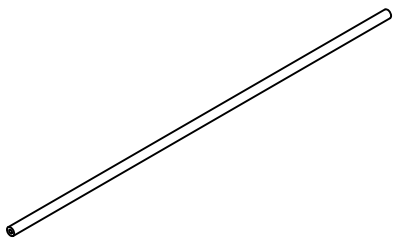 ×1	9 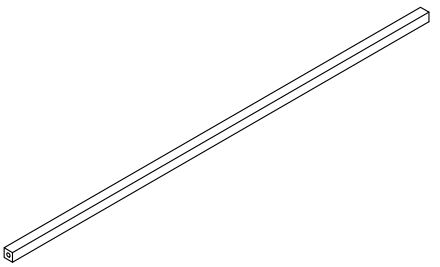 ×1	10 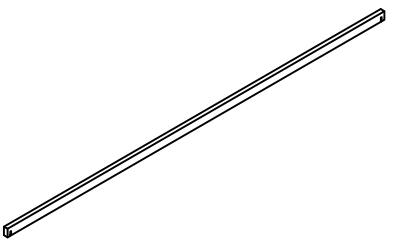 ×12
11 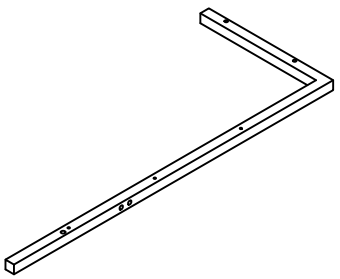 ×1	12 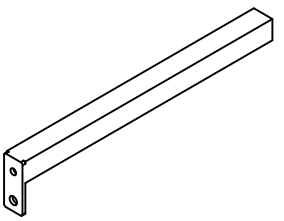 ×3	13 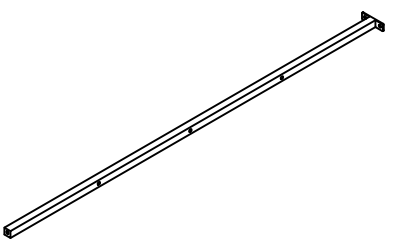 ×1
14 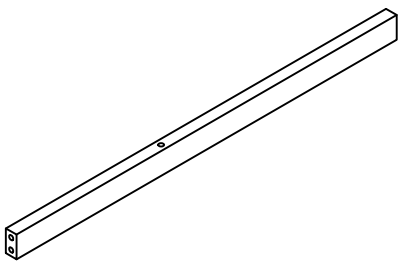 ×1	15 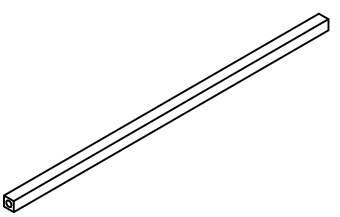 490x15mm ×6	16 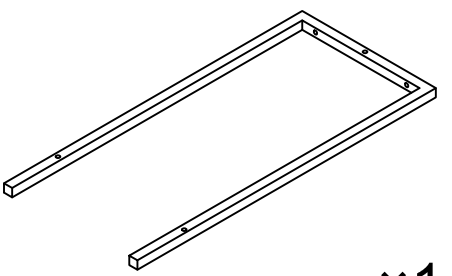 ×1
17 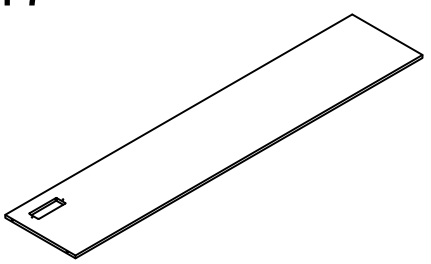 ×1	18 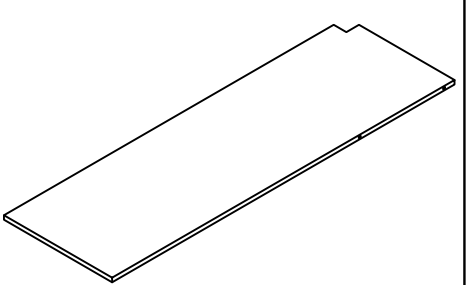 ×1	19 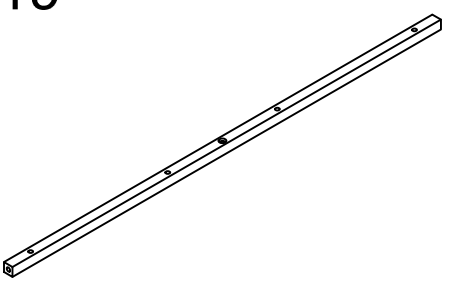 ×1

Parts List / Teile Liste

20 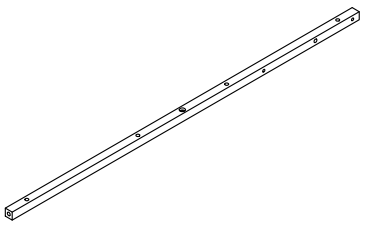 1000x20mm ×1	21 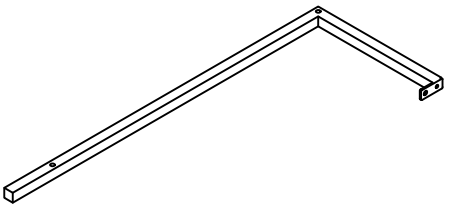 ×1	22 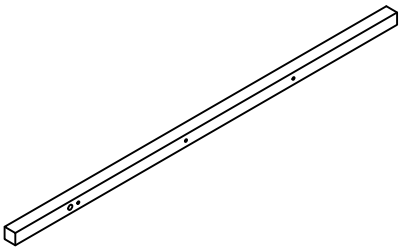 713x20mm ×2
23 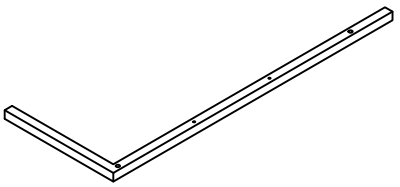 ×1	24 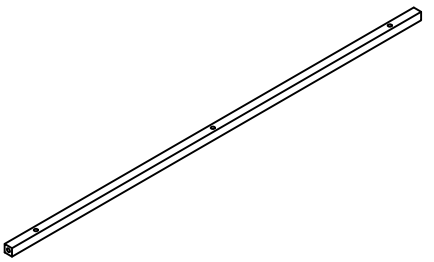 ×1	25 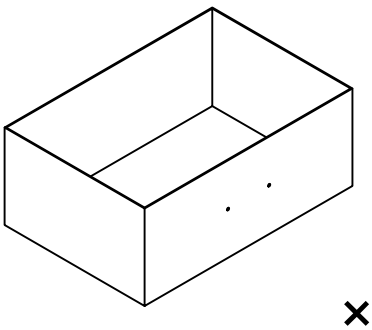 ×9
26 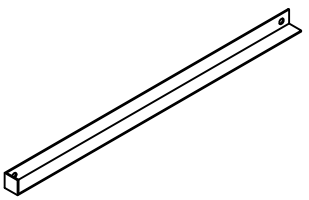 ×9	27 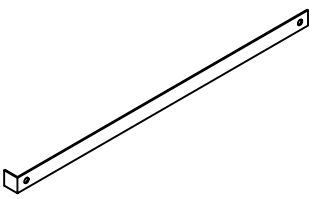 ×9	

Parts List / Teile Liste

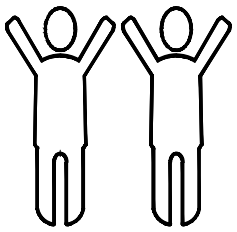
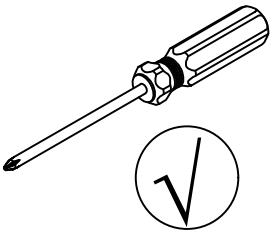
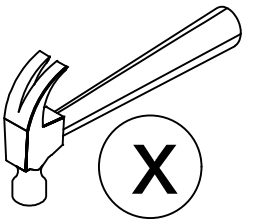
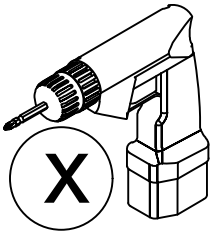

A 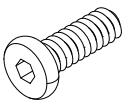 1/4x10mm 12PCS	B 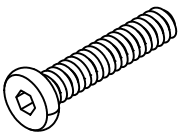 1/4x28mm 16PCS	C 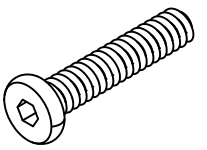 1/4x35mm 24PCS
D 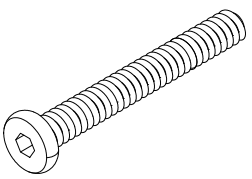 1/4x55mm 29PCS	E 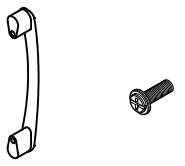 E1x9pcs E2x19pcs	F 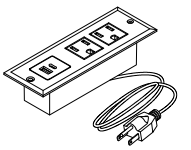 1 PC
G 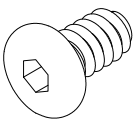 M5x10mm 45 PCS	H 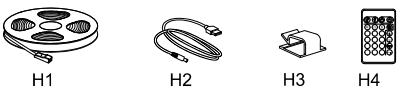 H1 H2 H3 H4 1PC	I 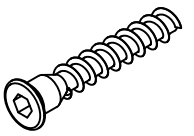 M5x40mm 2 PCS
J 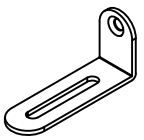 6 PCS	K 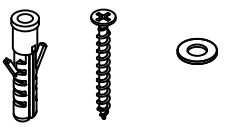 K1 K2 K3 7 PCS	L 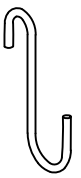 6 PCS
M 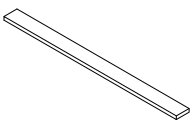 4PCS	N 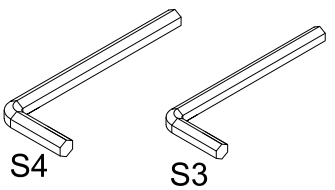 S4 S3 1 PC	0 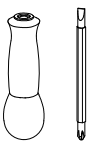 1 PC
P 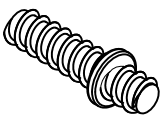 1/4x40mm 2PCS	Q 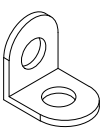 2PCS	R 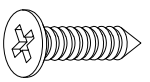 M3.5x12mm 3PCS

☒ Please don't tighten the screws completely and go back later for a final tightening of all the screws after pieces are aligned with each other.



Assembly Steps / Montageschritte

STEP 1

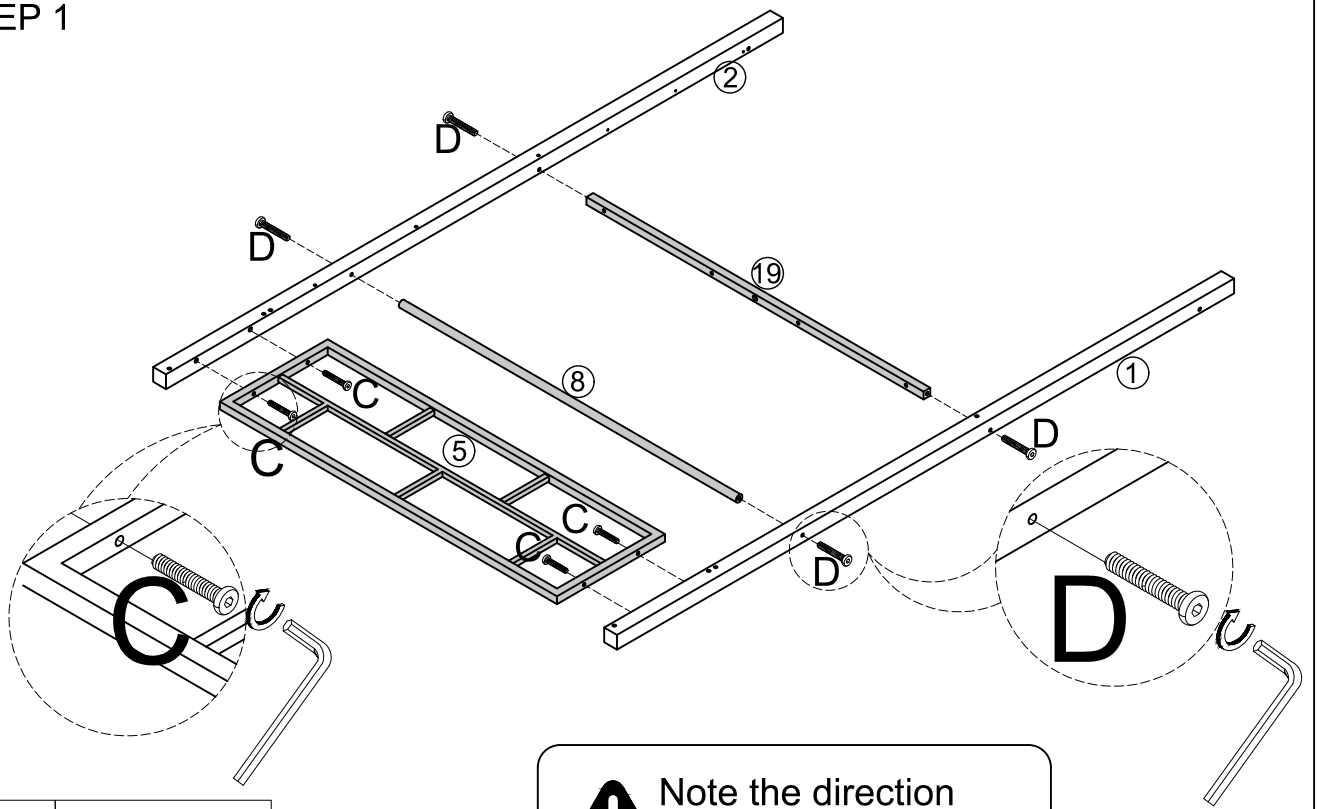

	C*4PCS
	D*4PCS

Note the direction of the holes.

STEP 2

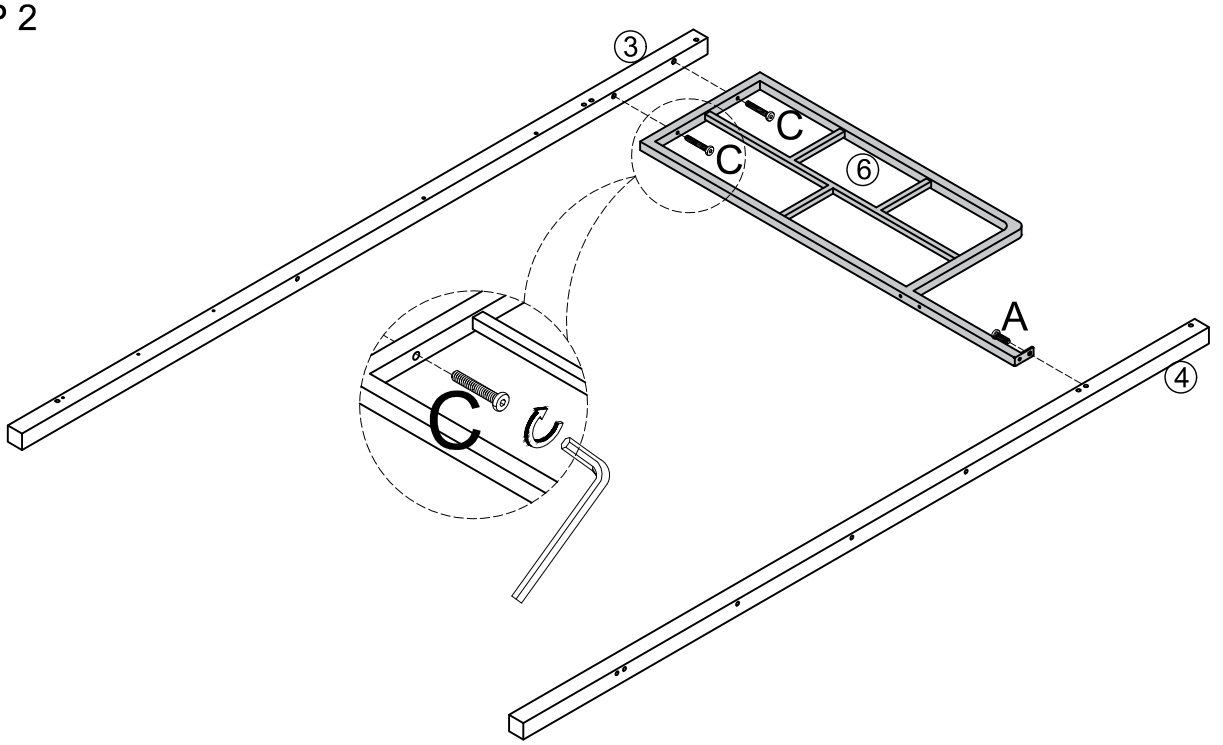

	A*1PCS
	C*2PCS

Note the direction of the holes.

Assembly Steps / Montageschritte

STEP 3

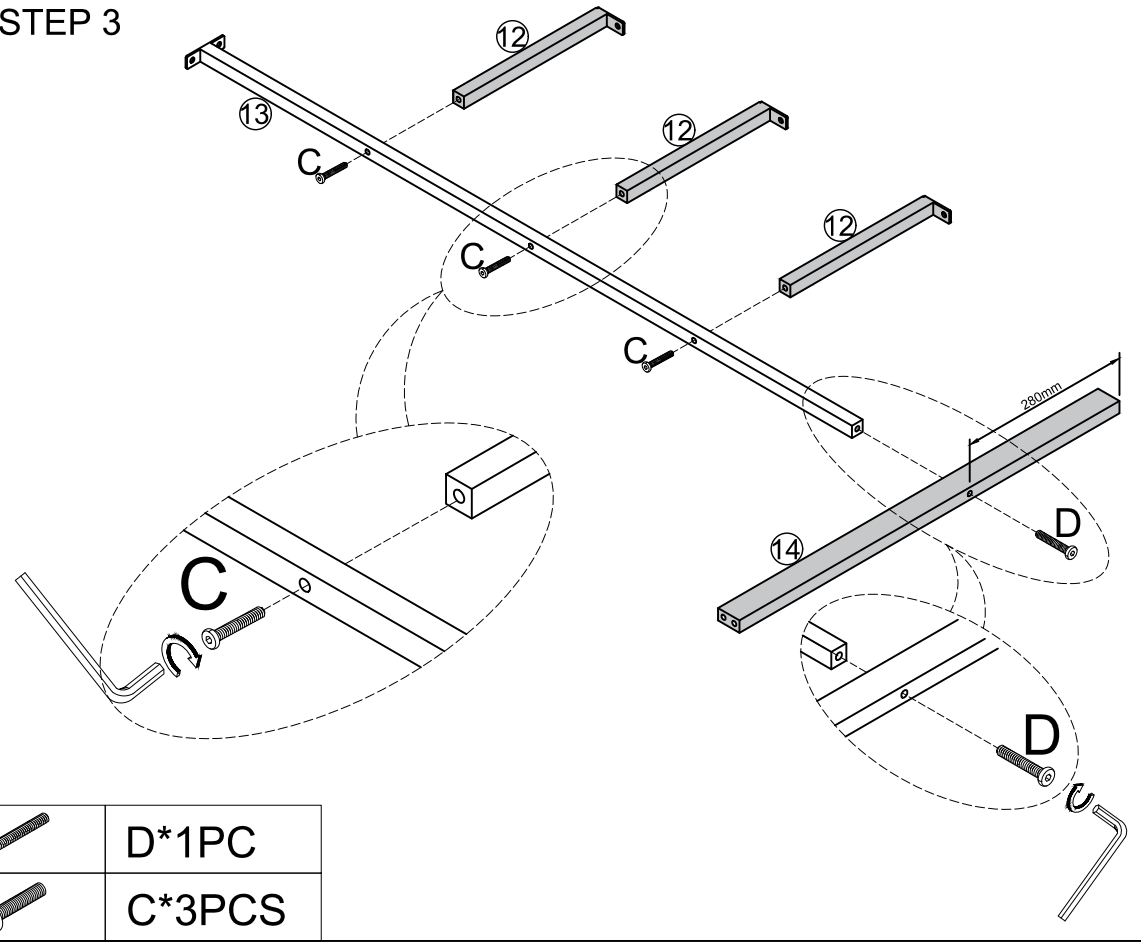

	D*1PC
	C*3PCS

STEP 4

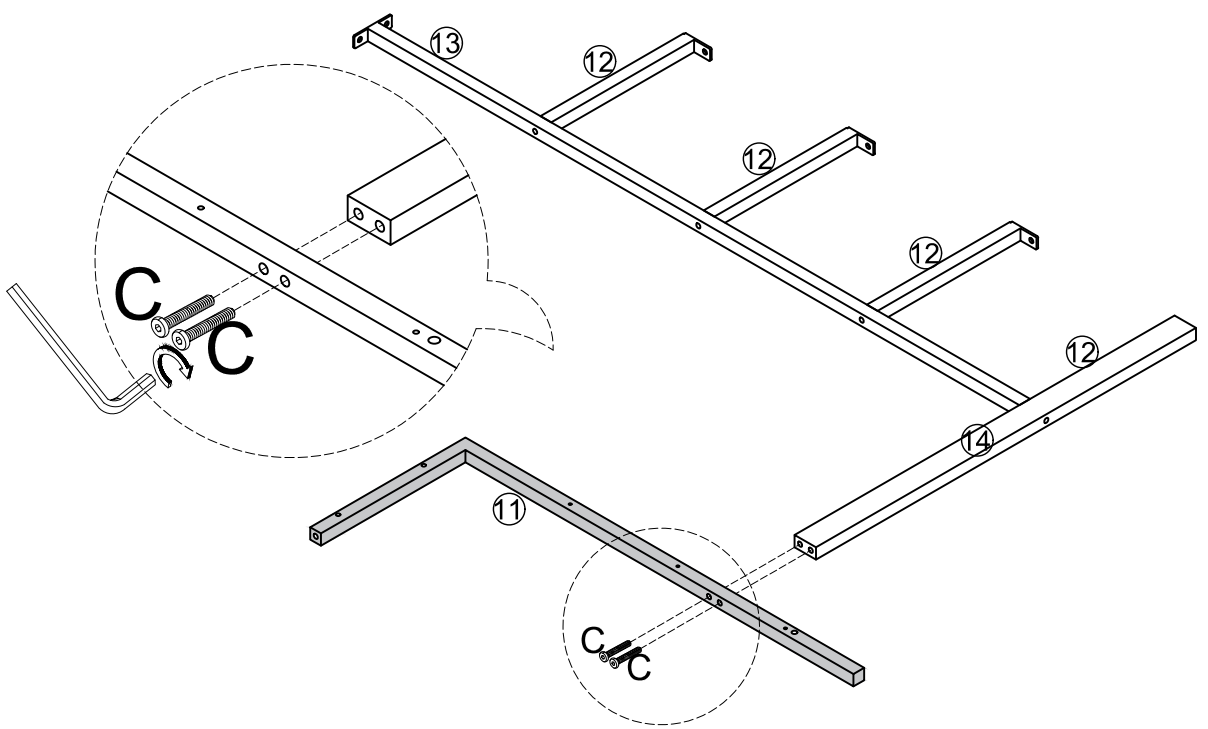

	C*2PCS

Assembly Steps / Montageschritte

STEP 5

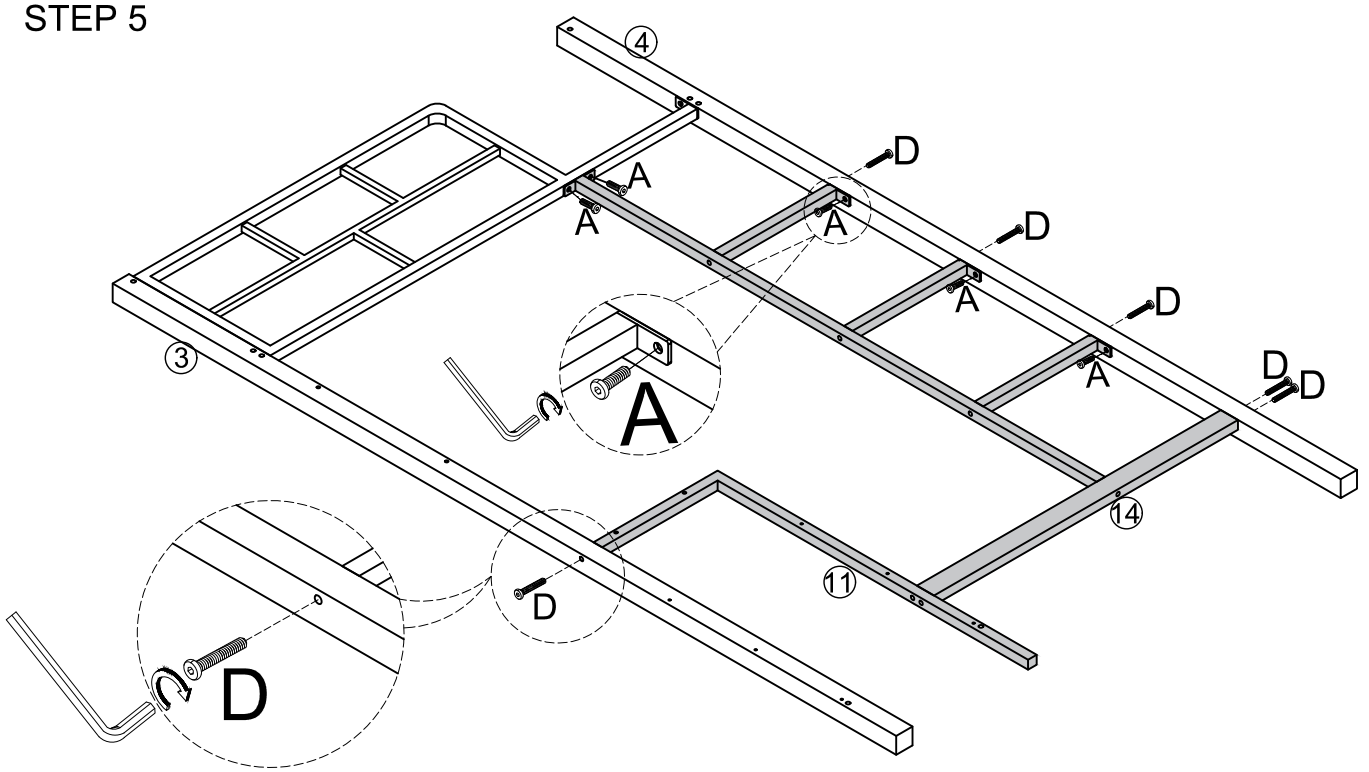

	A*5PCS
	D*6PCS

STEP 6

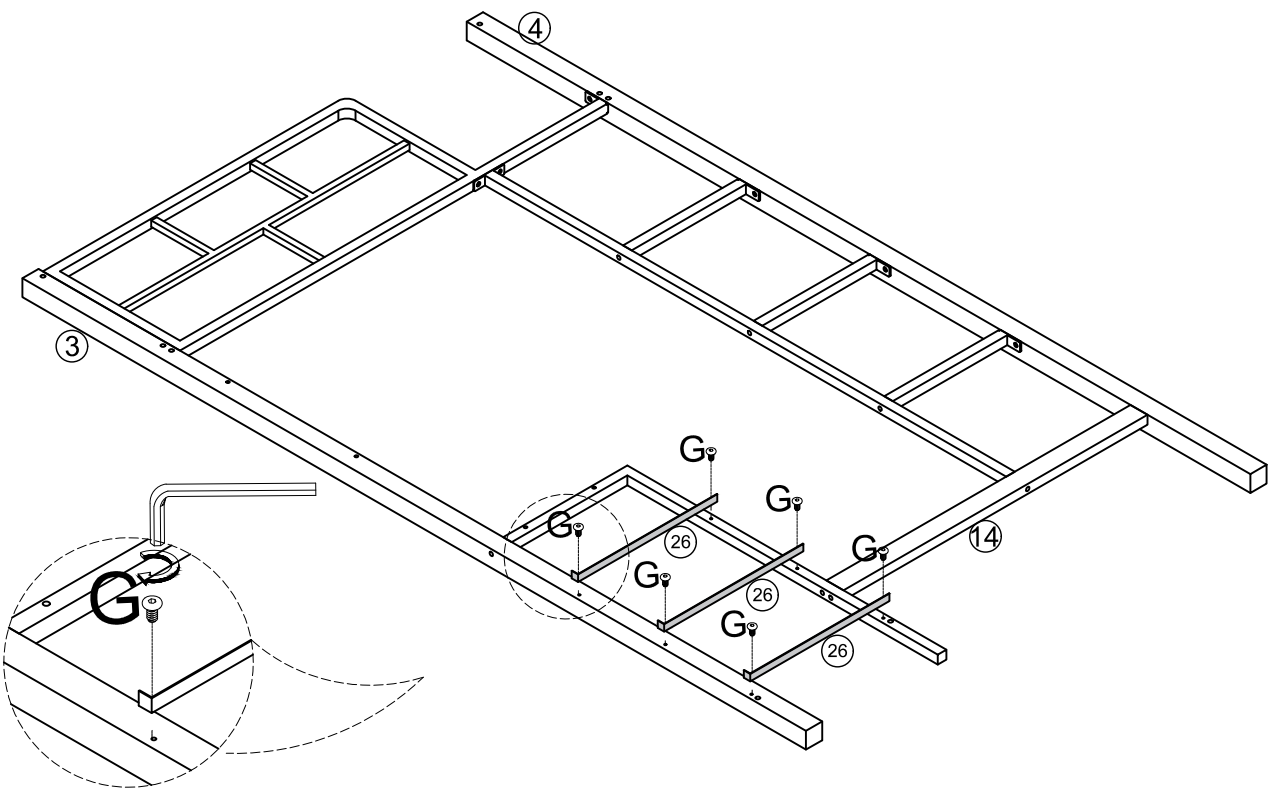

	G*6PCS

Assembly Steps / Montageschritte

STEP 7

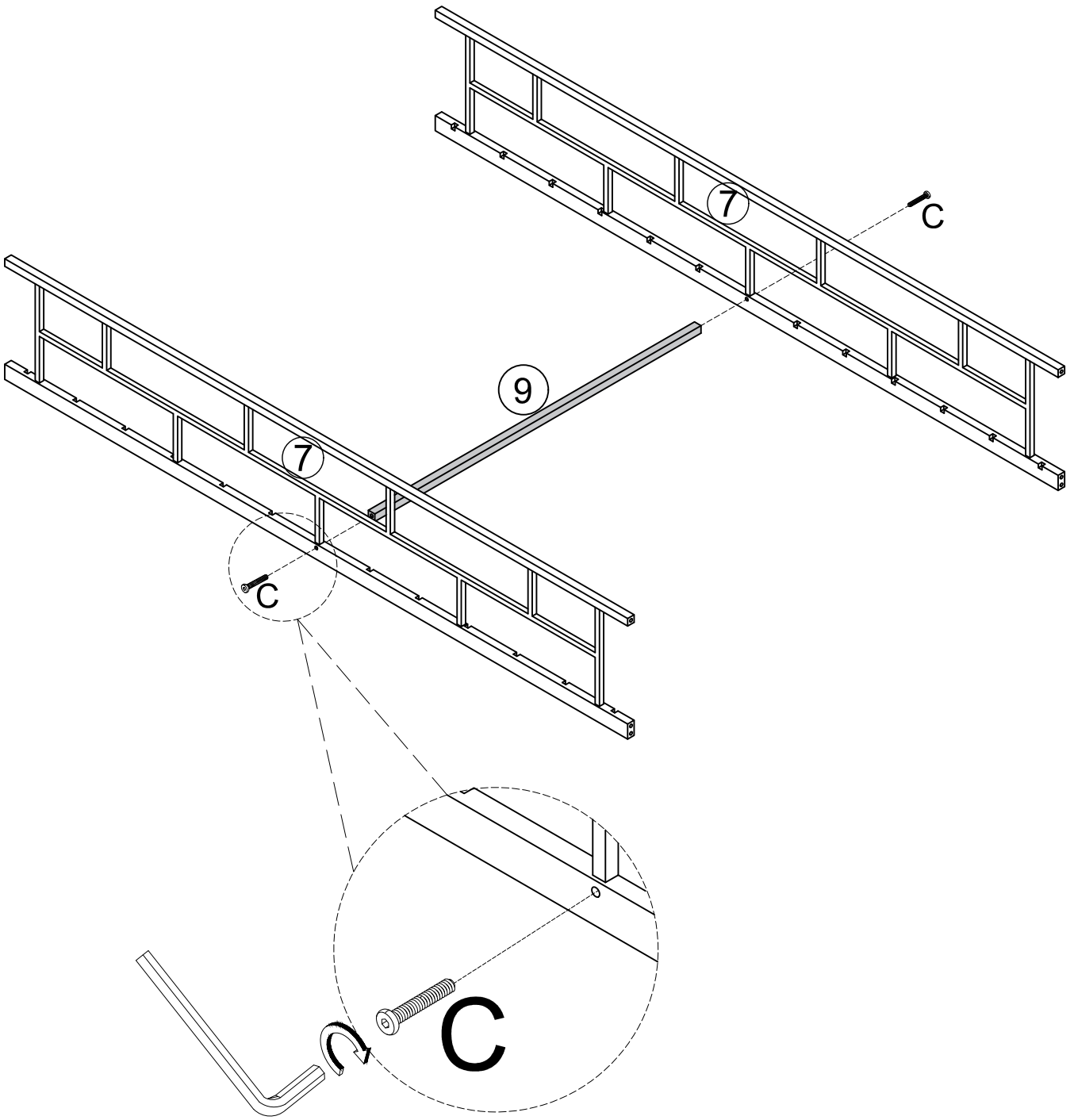

	C*2PCS

Assembly Steps / Montageschritte

STEP 8

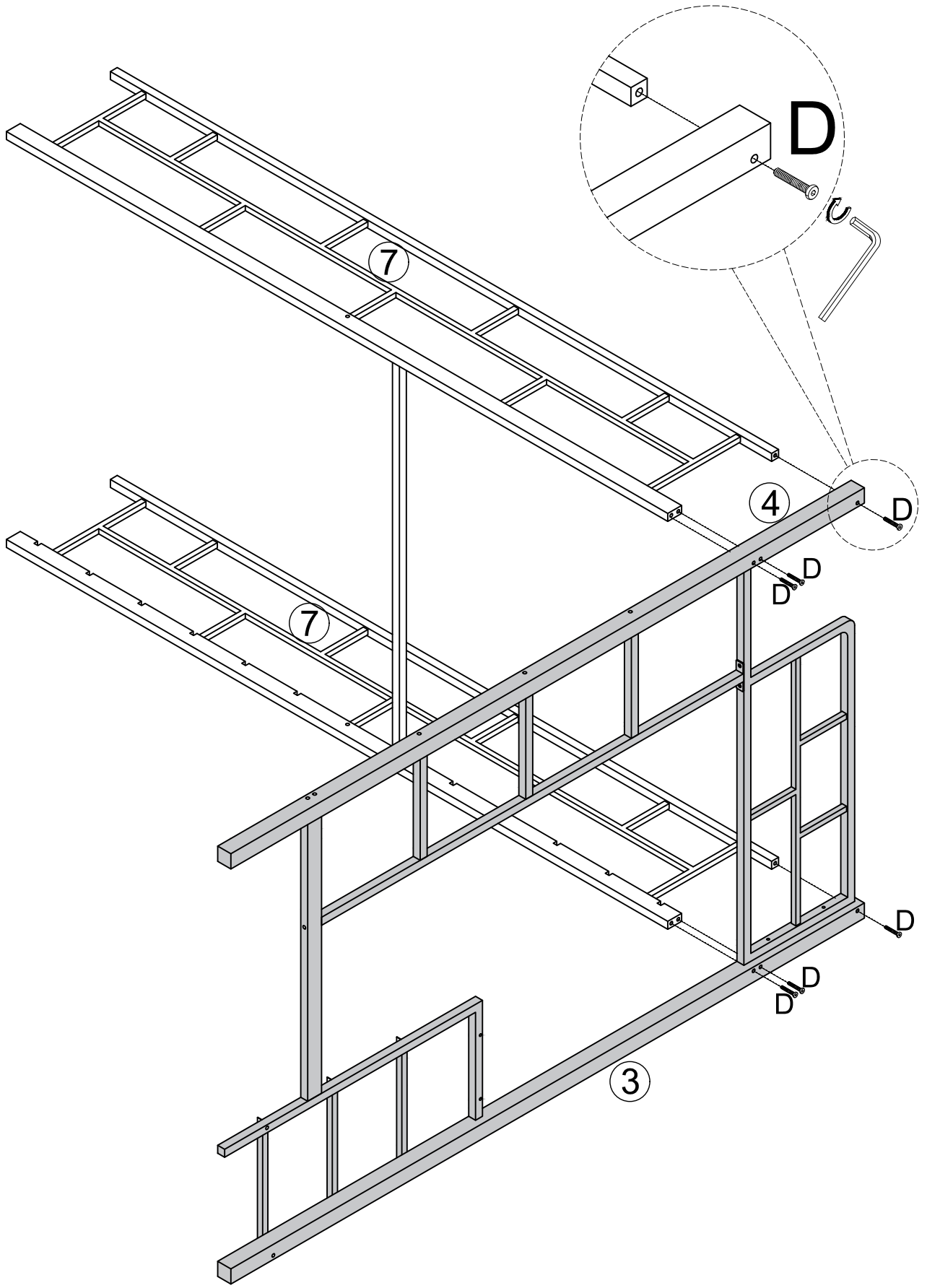

	D*6PCS

Assembly Steps / Montageschritte

STEP 9

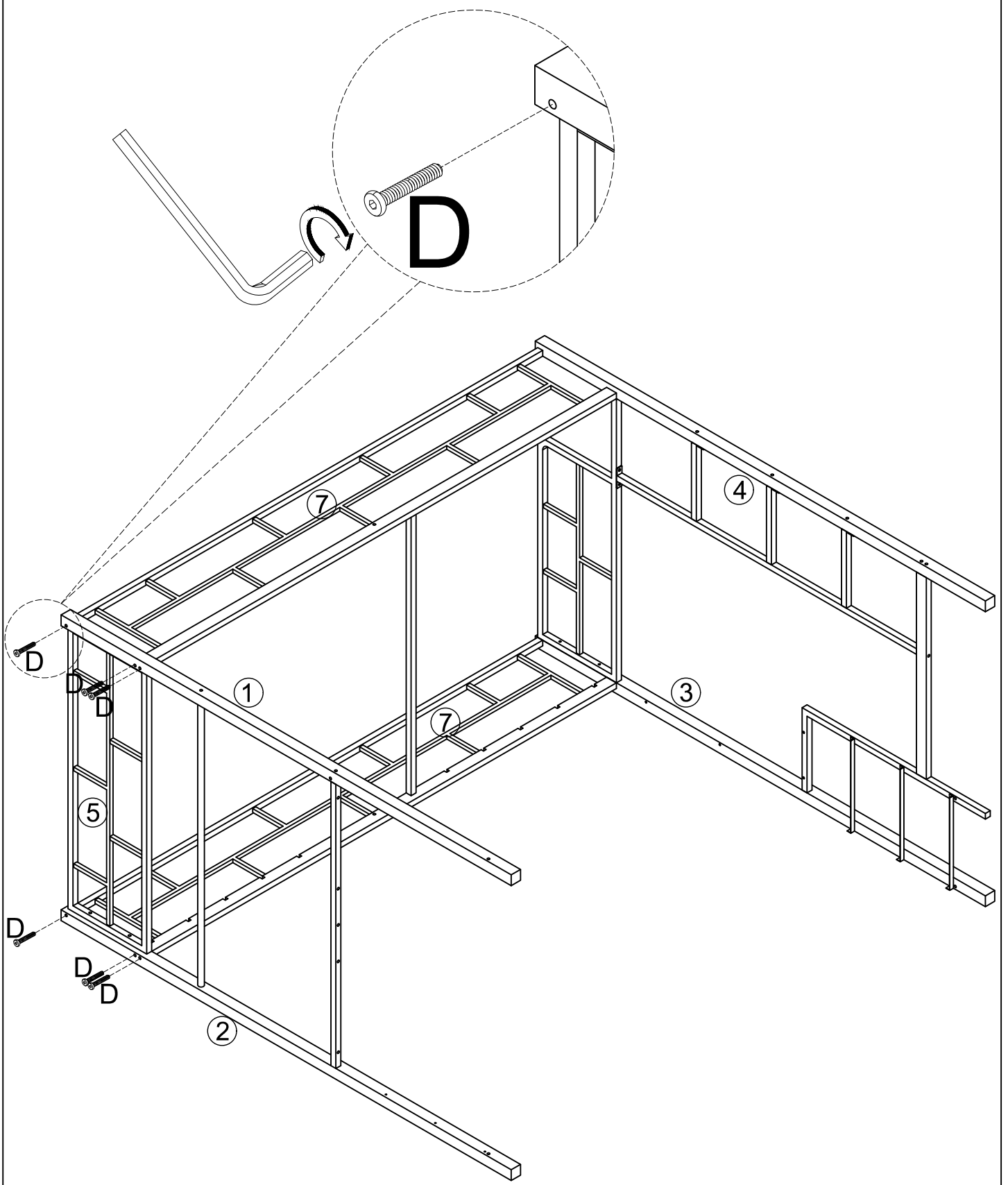

	D*6PCS

Assembly Steps / Montageschritte

STEP 10

⚠ ATTENTION

- Remove the sticker, then press and paste the LED(H1) strip on the fixed position.

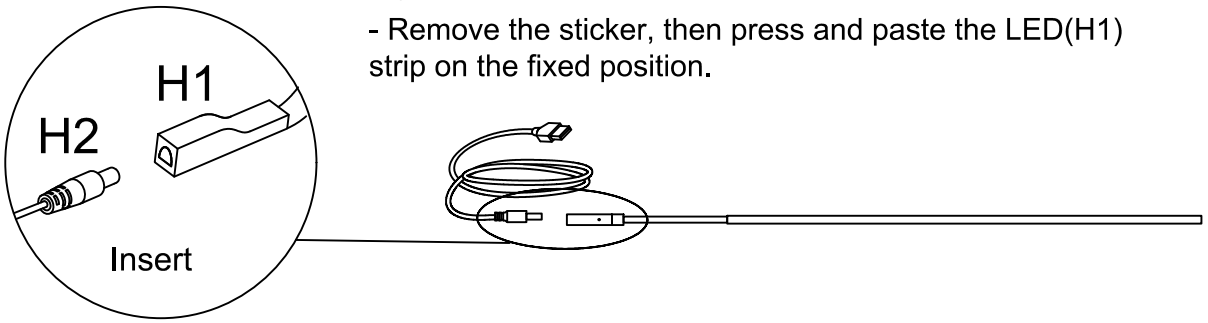

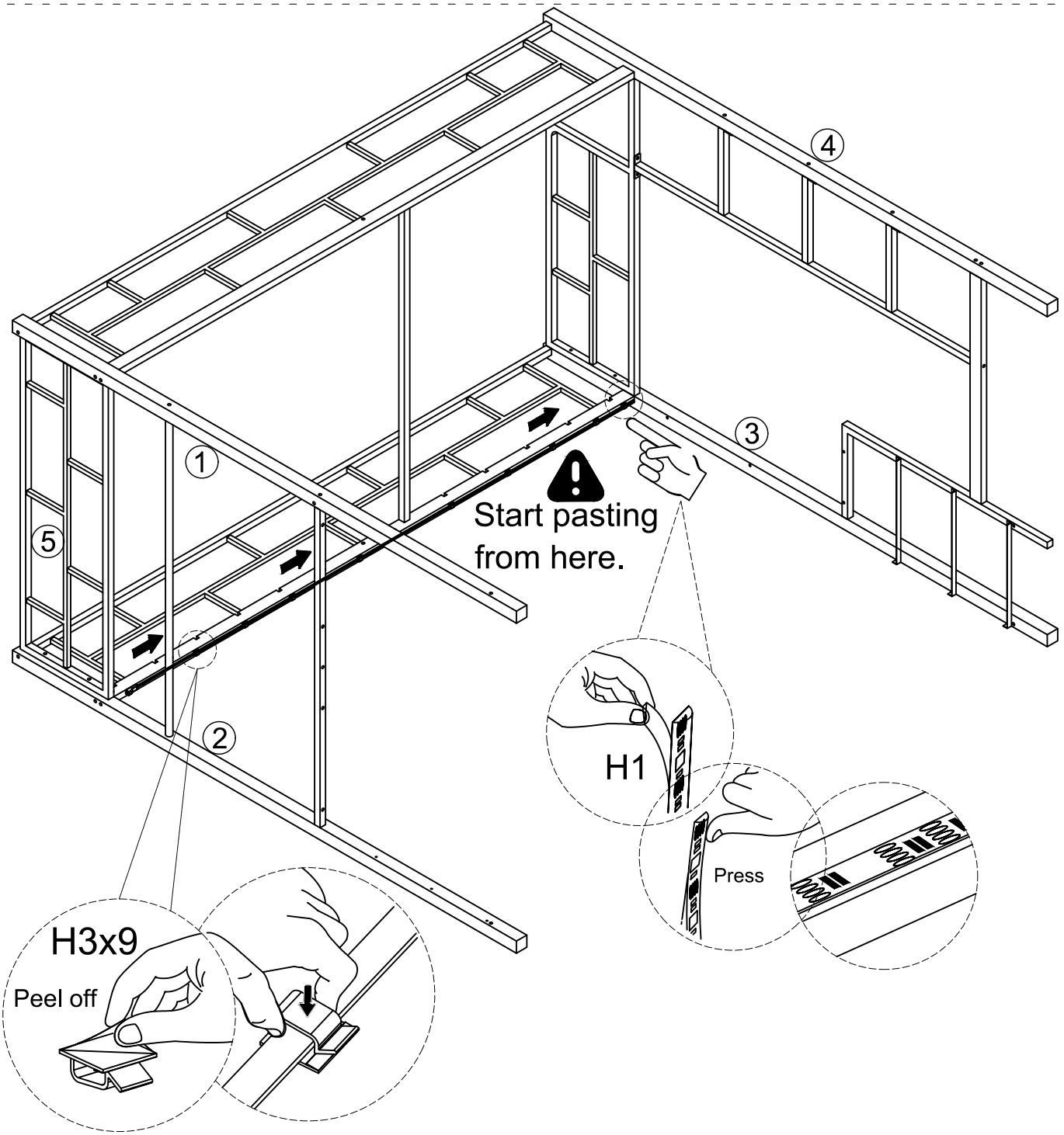

	H*1PC

Assembly Steps / Montageschritte

STEP 11

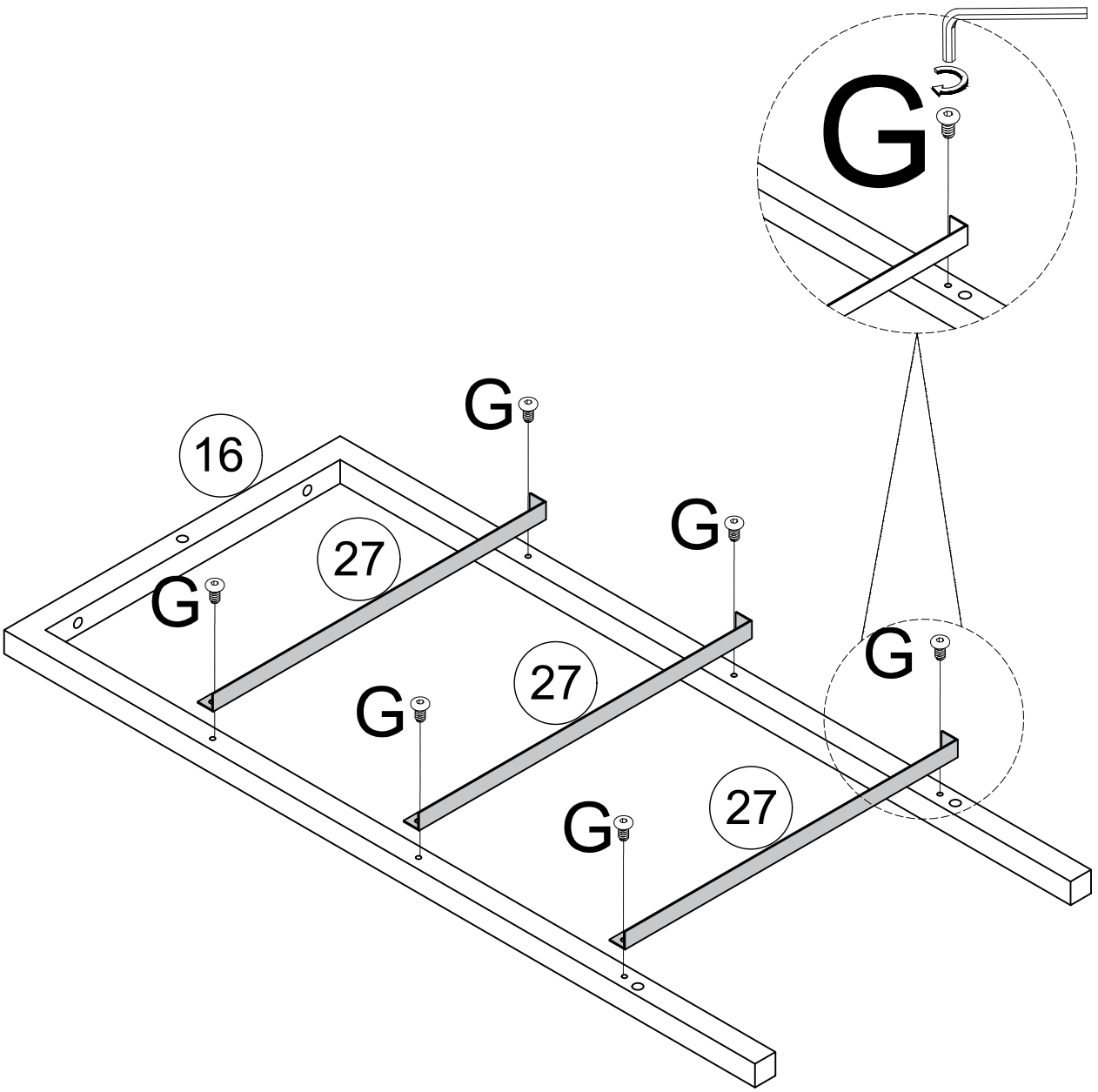

	G*6PCS

Assembly Steps / Montageschritte

STEP 12

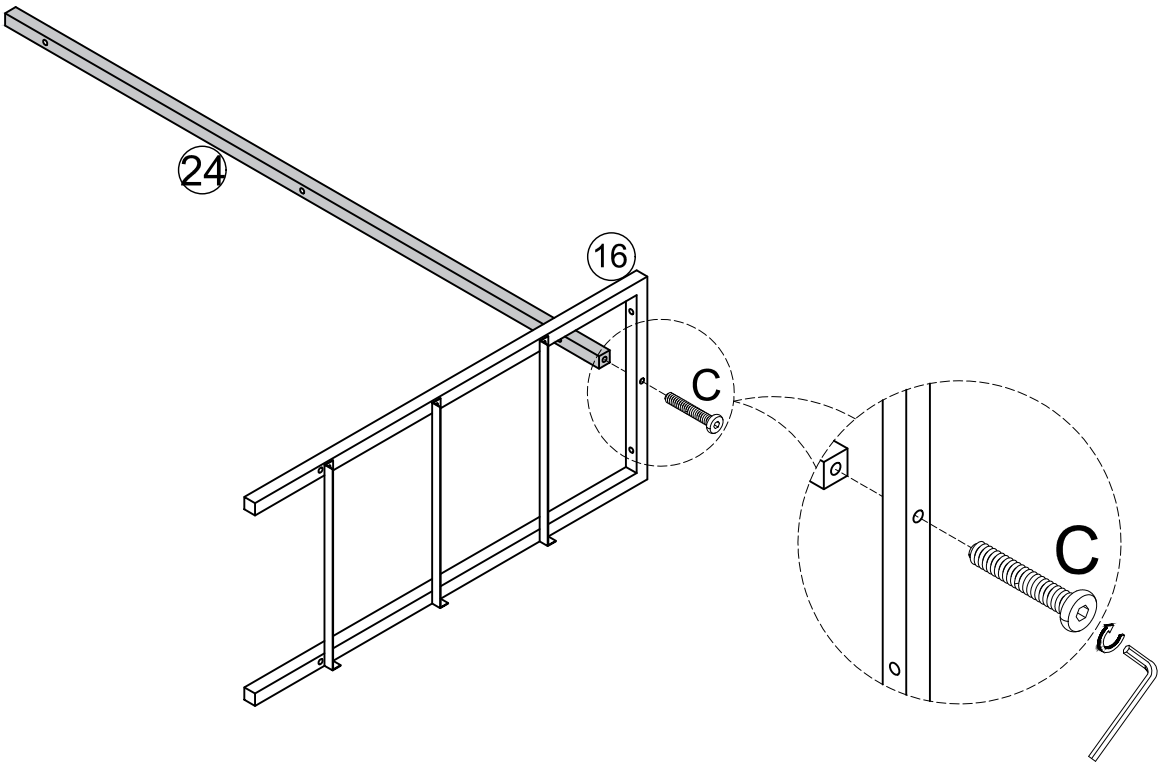

	C*1PC

STEP 13

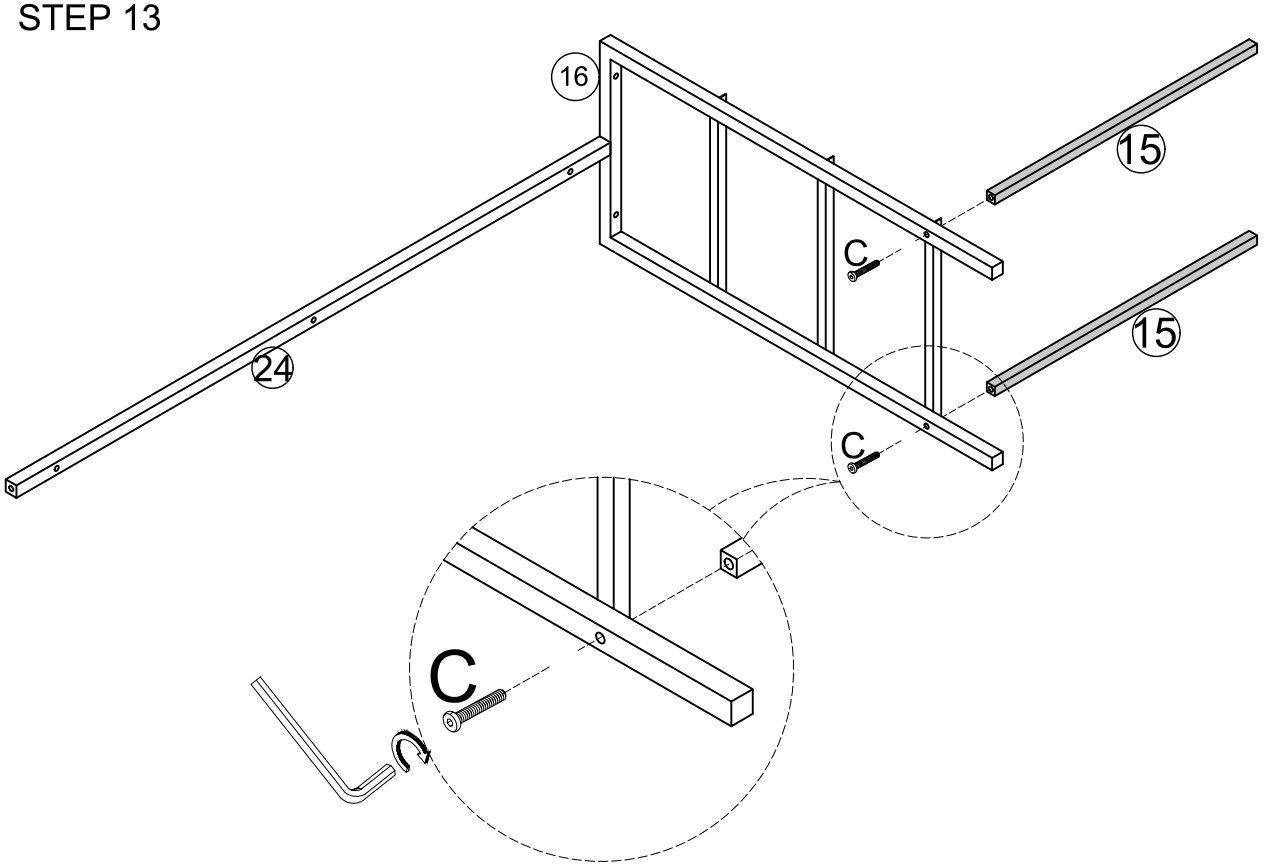

	C*2PCS

Assembly Steps / Montageschritte

STEP 14

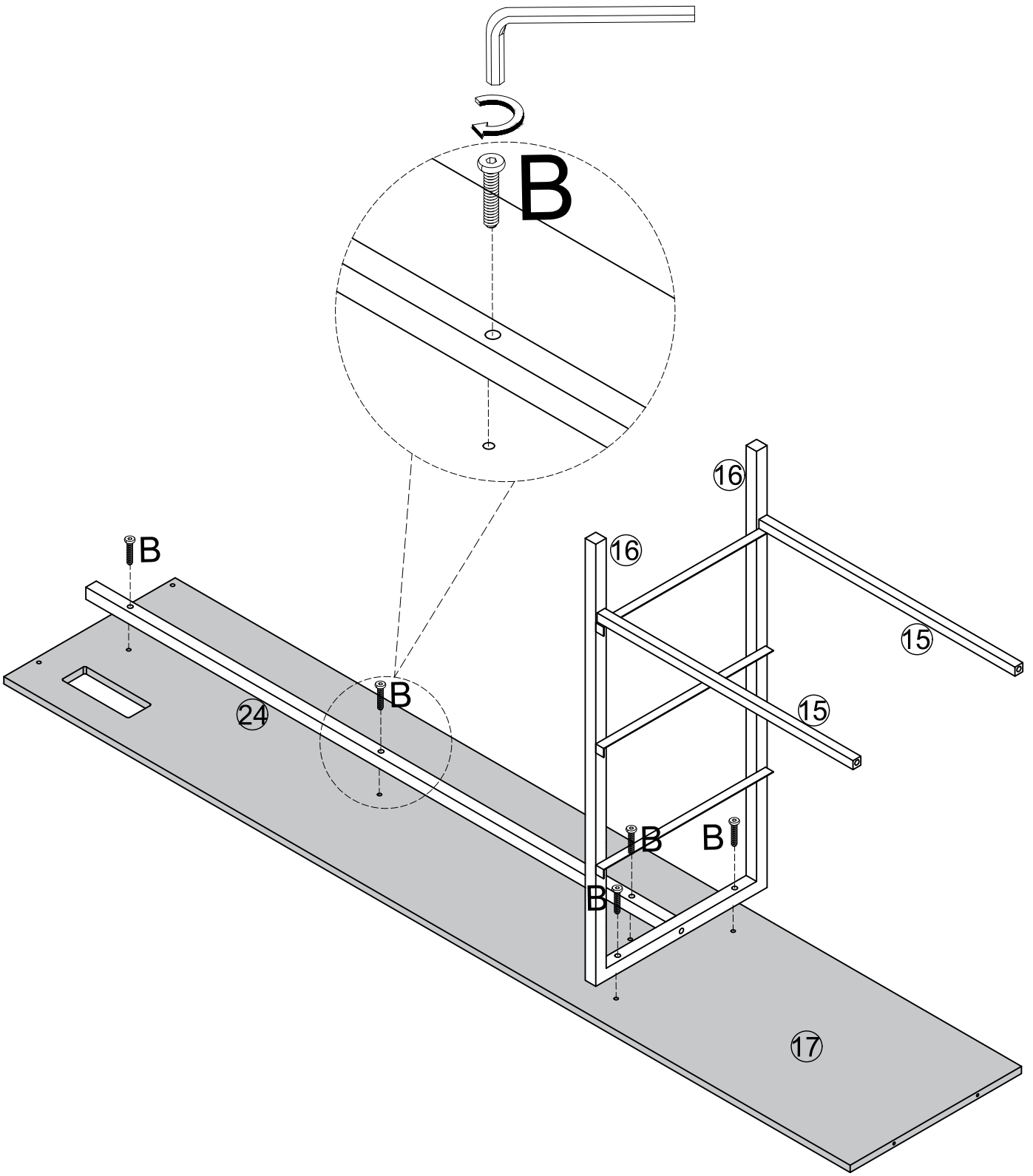

	B*5PCS

Assembly Steps / Montageschritte

STEP 15

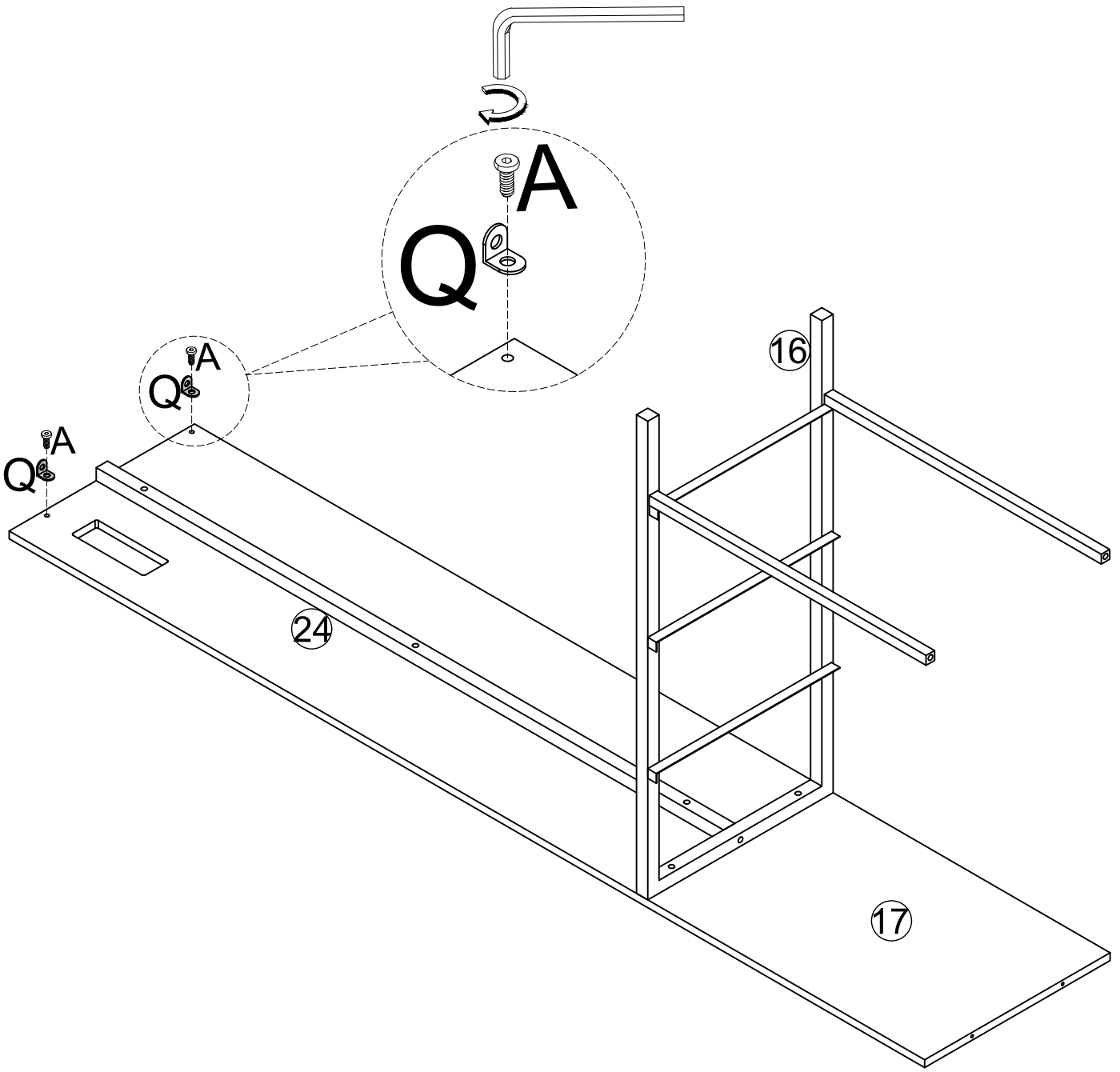

	Q*2PCS
	A*2PCS

Assembly Steps / Montageschritte

STEP 16

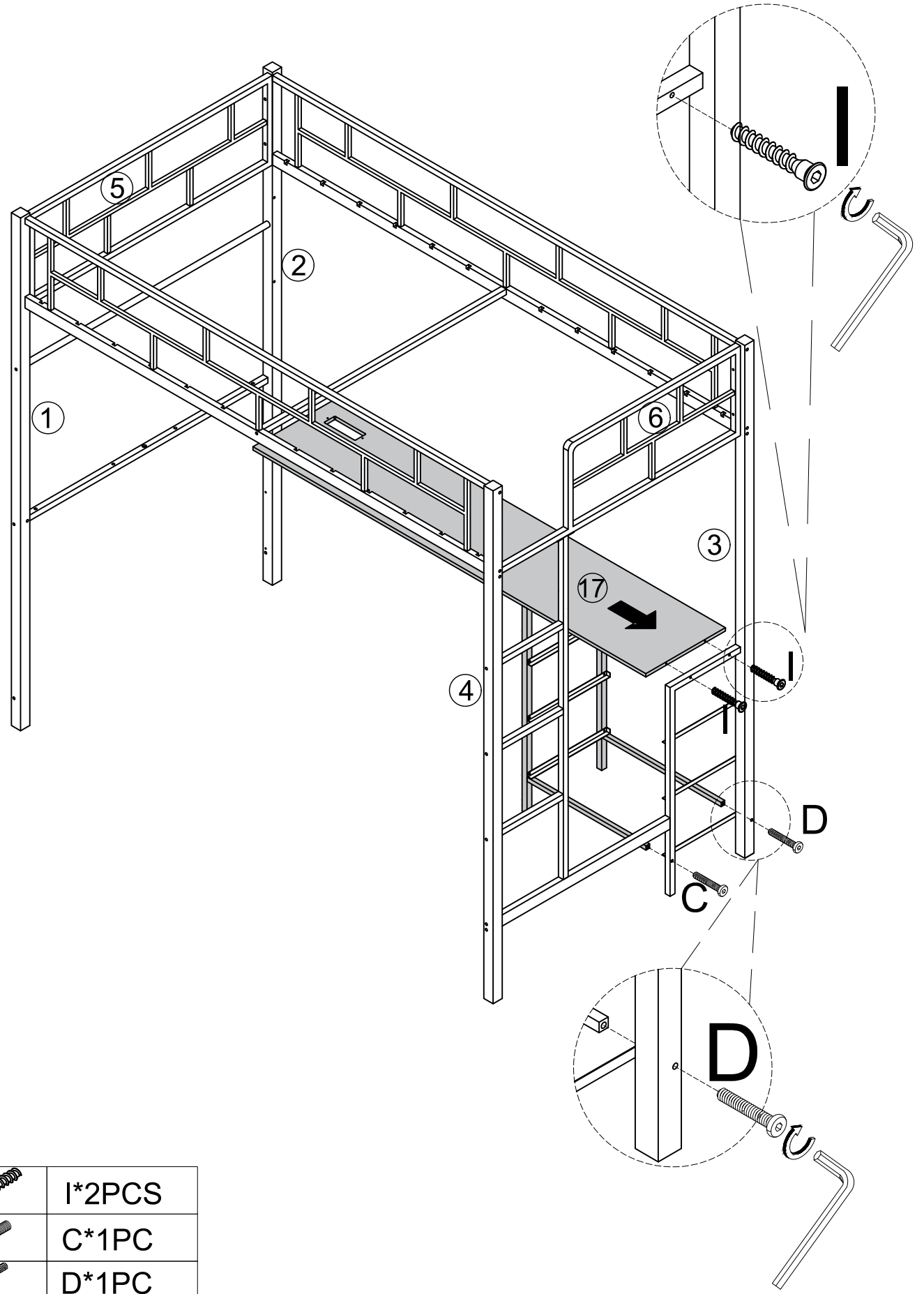

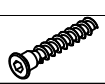	I*2PCS
	C*1PC
	D*1PC

Assembly Steps / Montageschritte

STEP 17

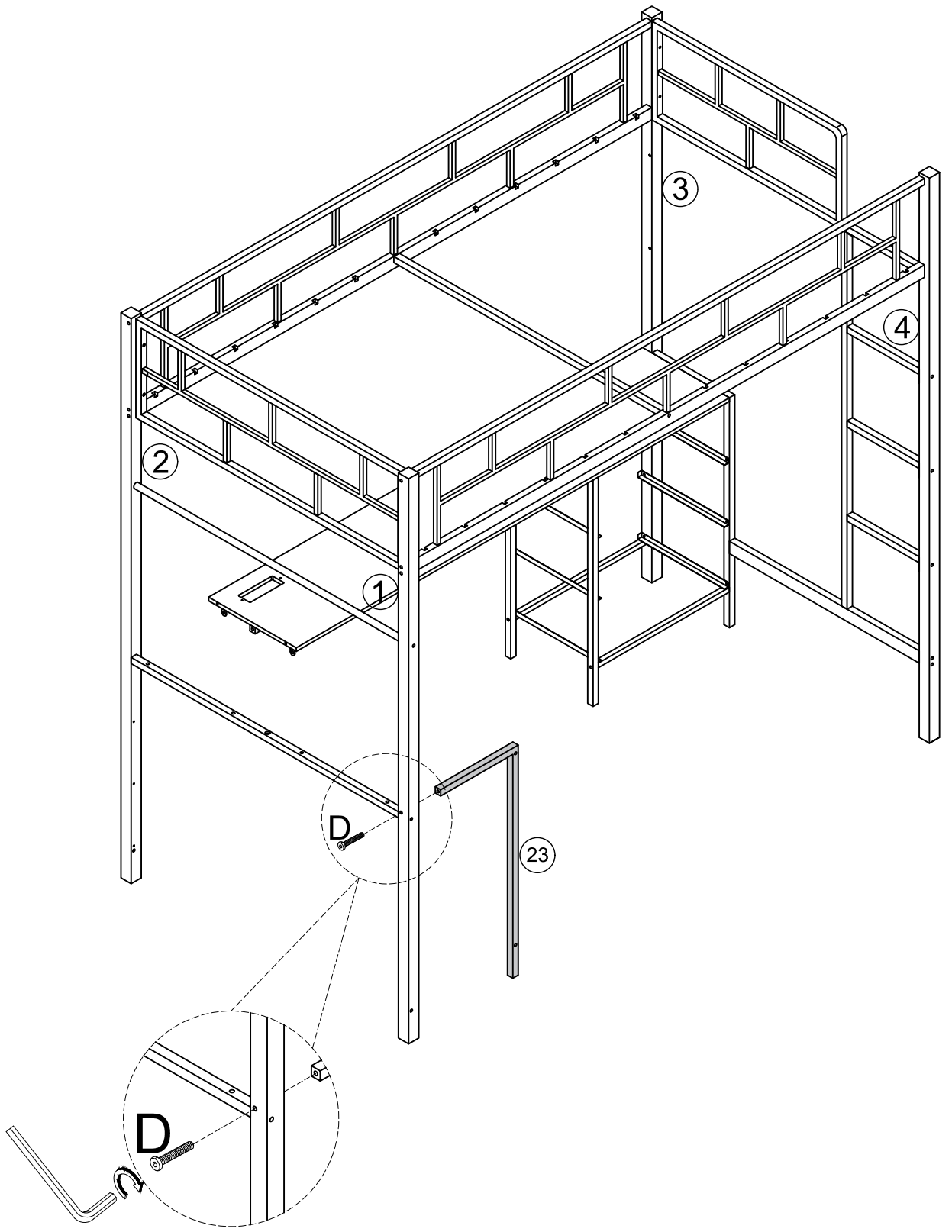

	D*1PC

Assembly Steps / Montageschritte

STEP 18

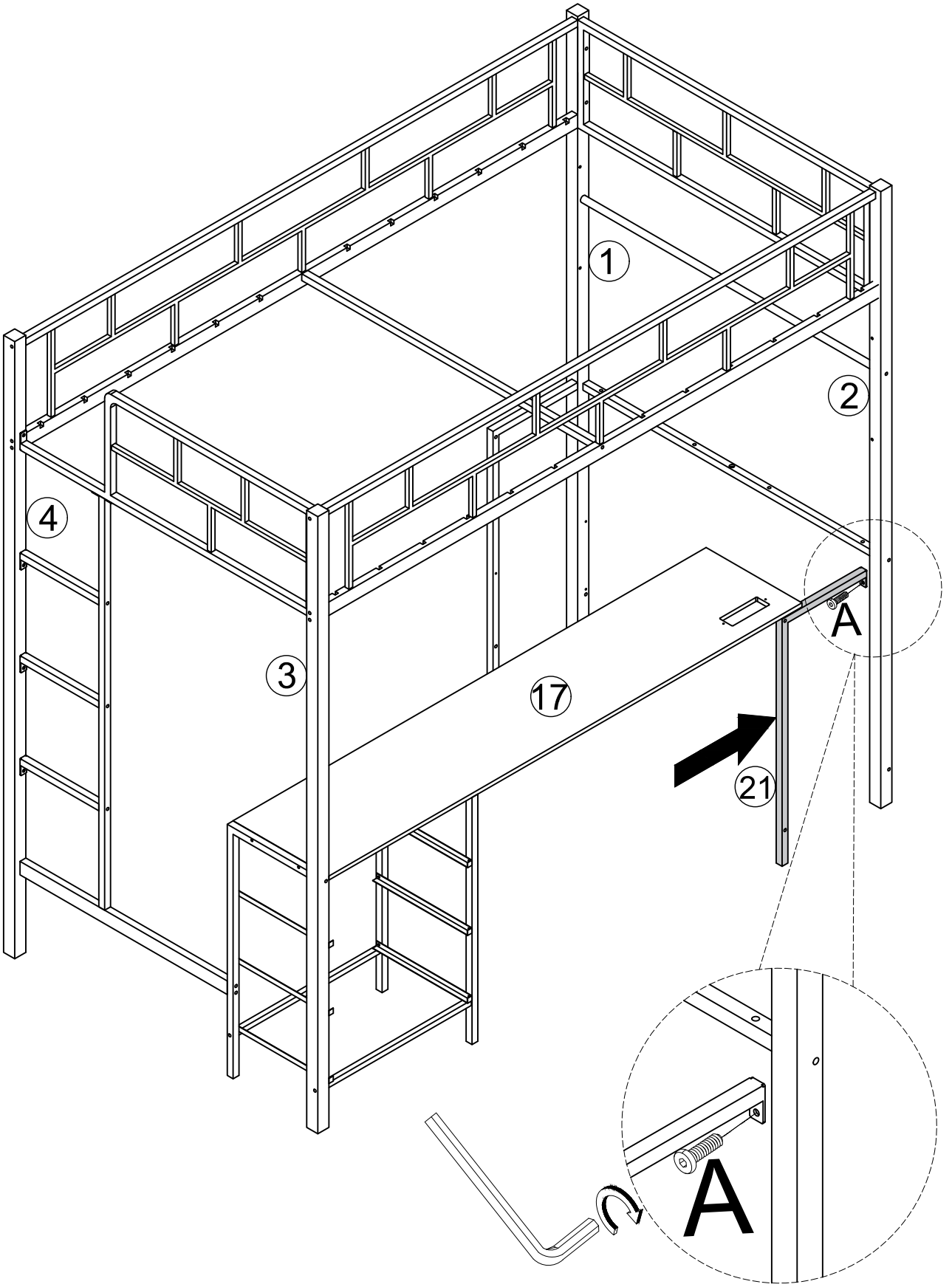

	A*1PCS

Assembly Steps / Montageschritte

STEP 19

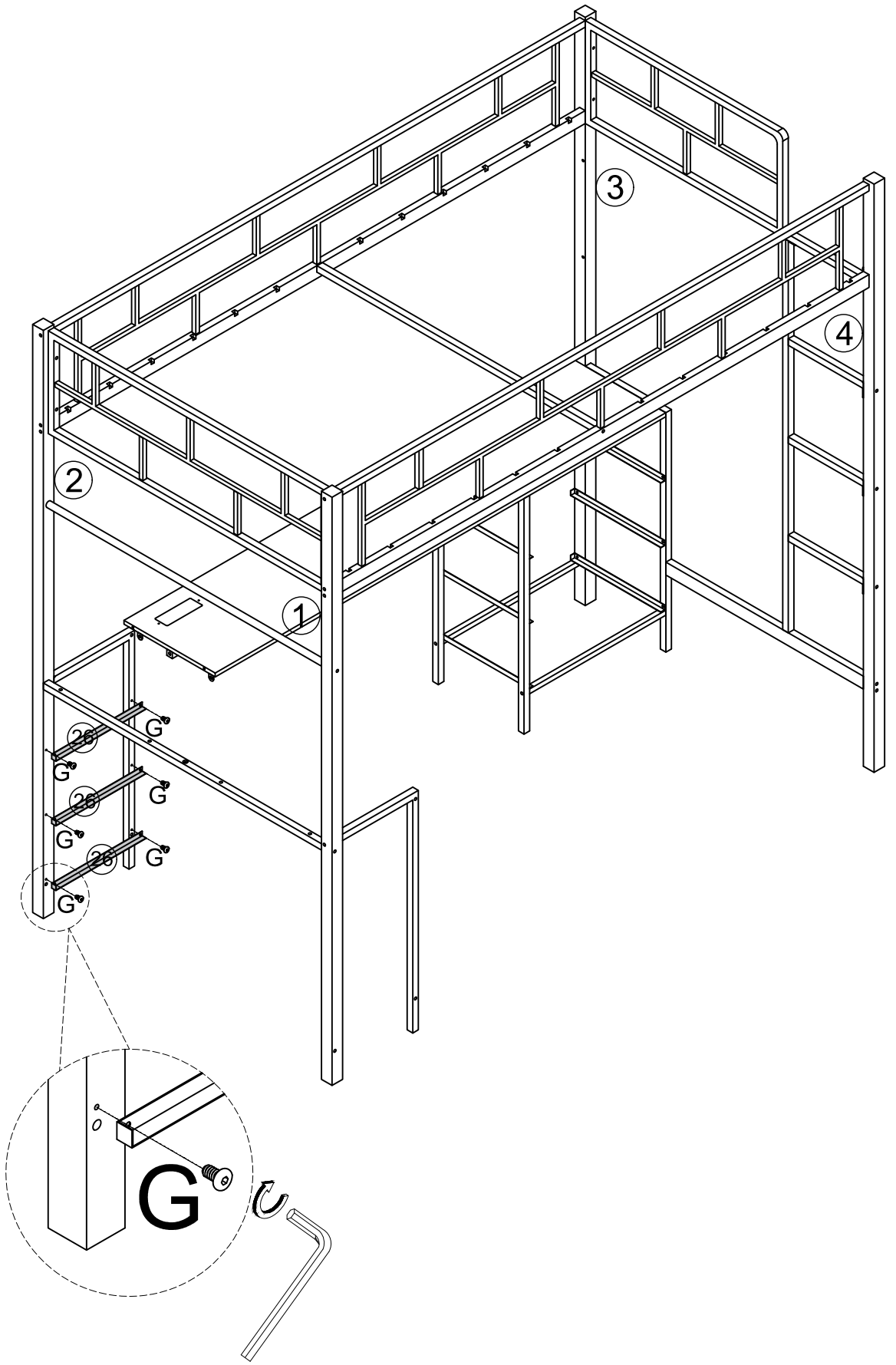

	G*6PCS

Assembly Steps / Montageschritte

STEP 20

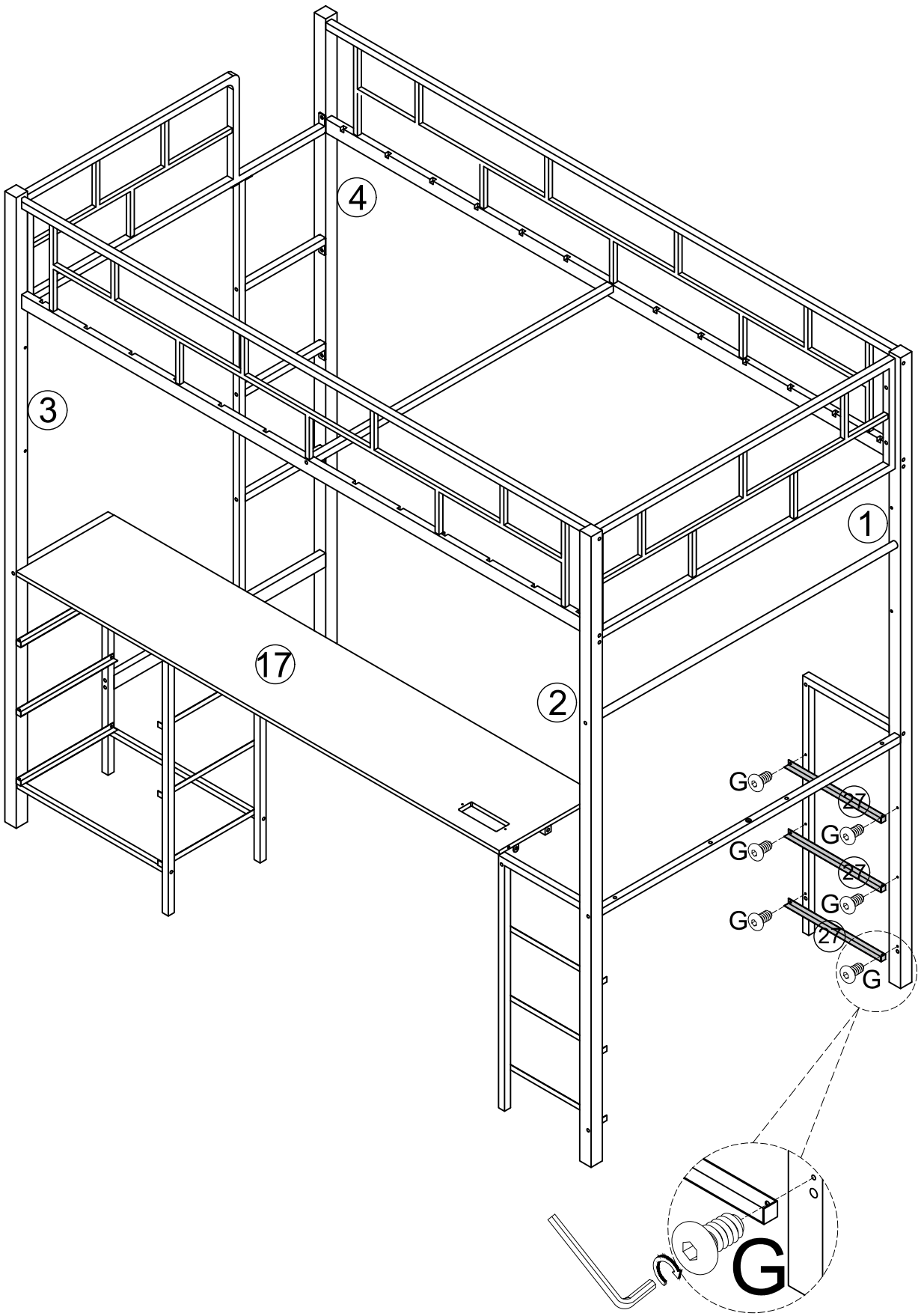

	G*6PCS

Assembly Steps / Montageschritte

STEP 21

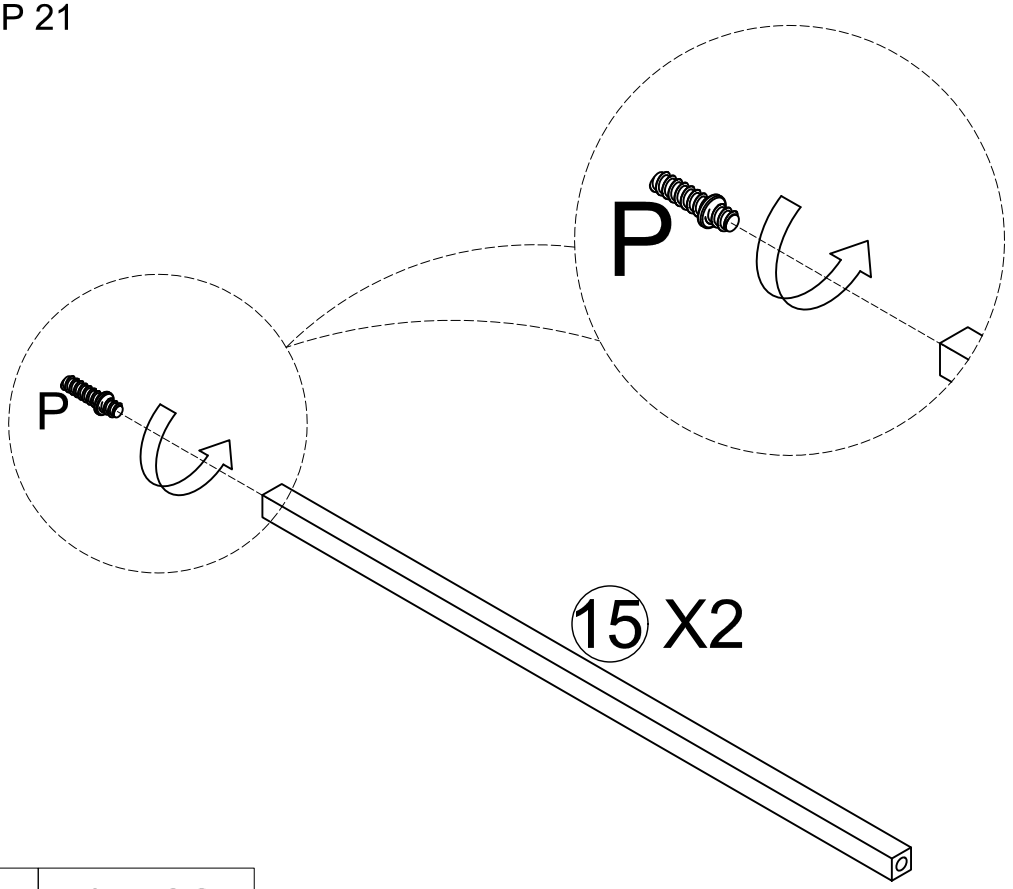

	P*2PCS

STEP 22

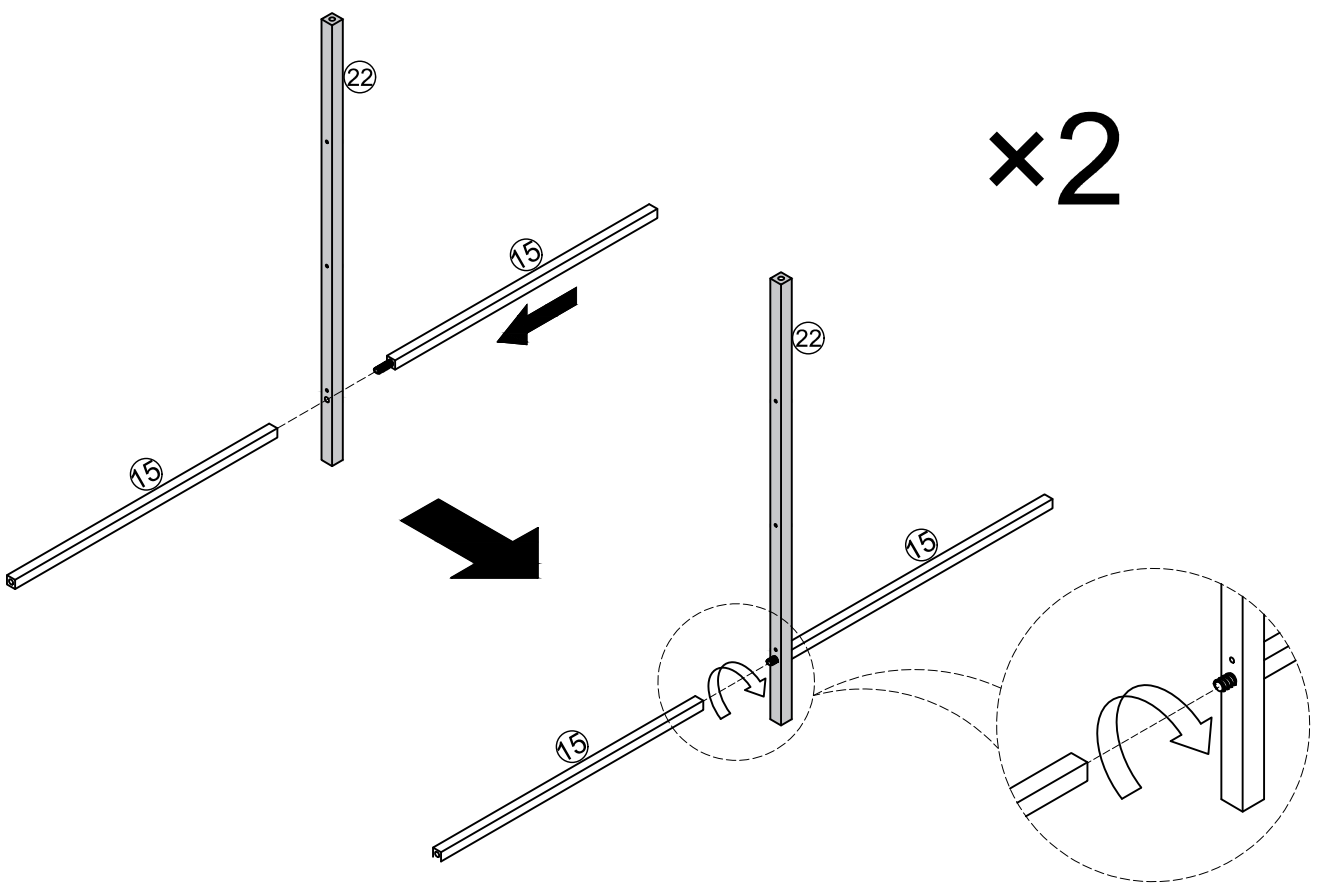

Assembly Steps / Montageschritte

STEP 23

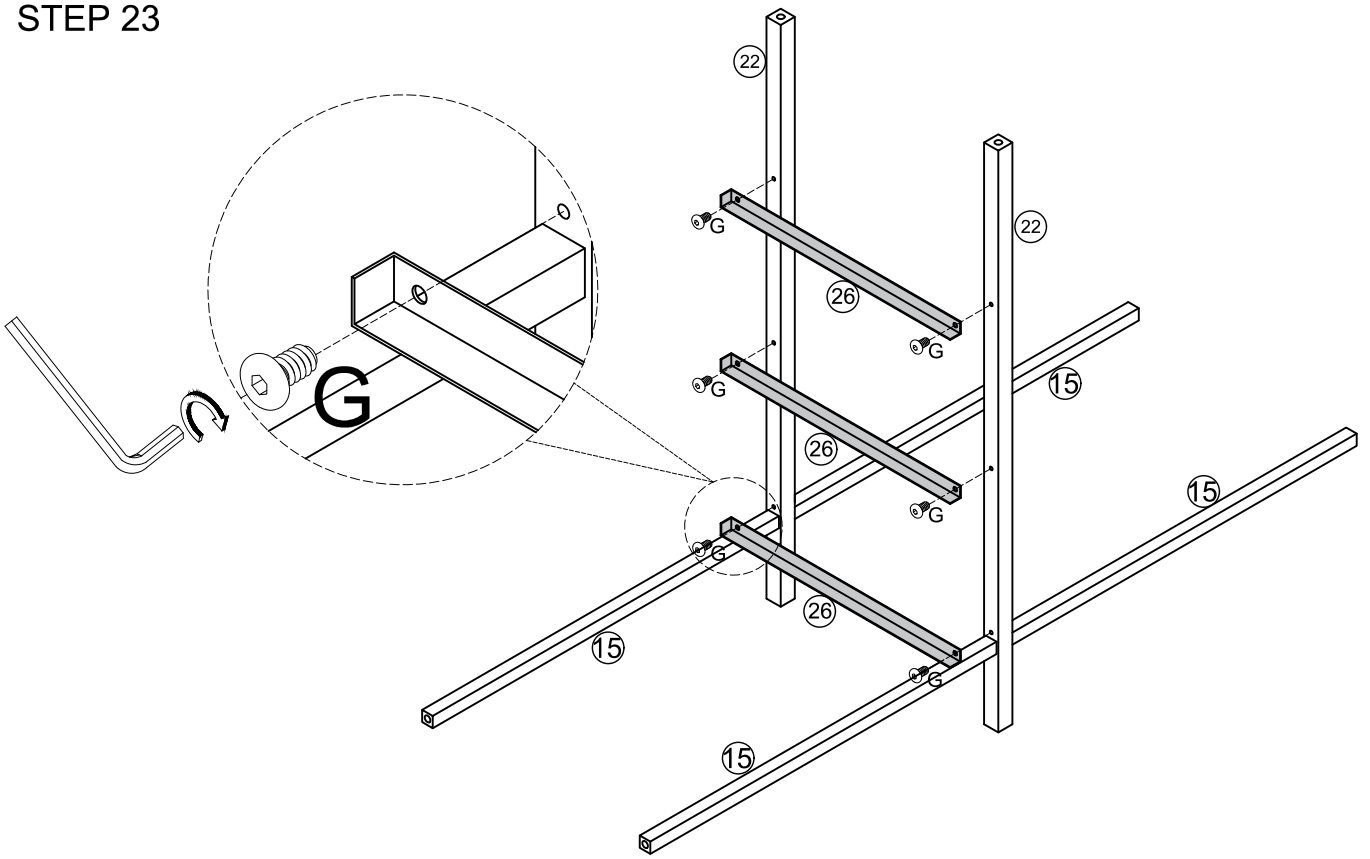



G*6PCS

STEP 24

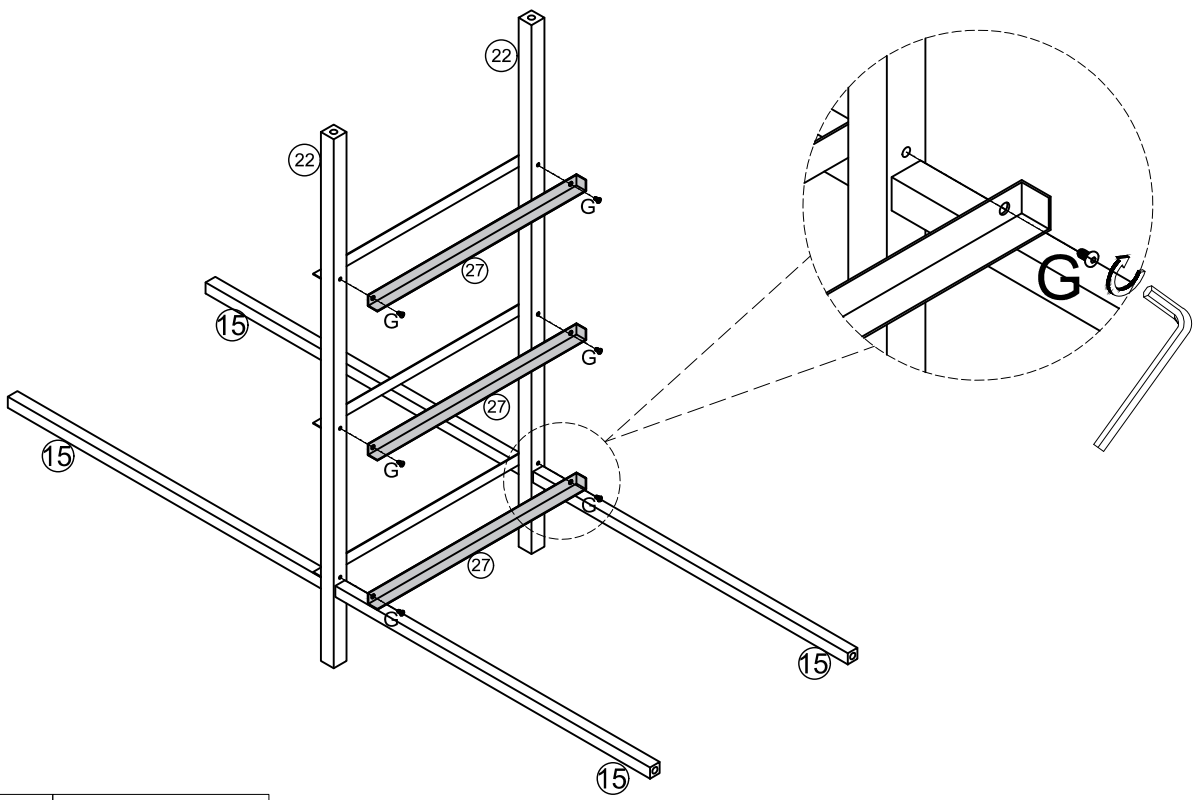



G*6PCS

Assembly Steps / Montageschritte

STEP 25

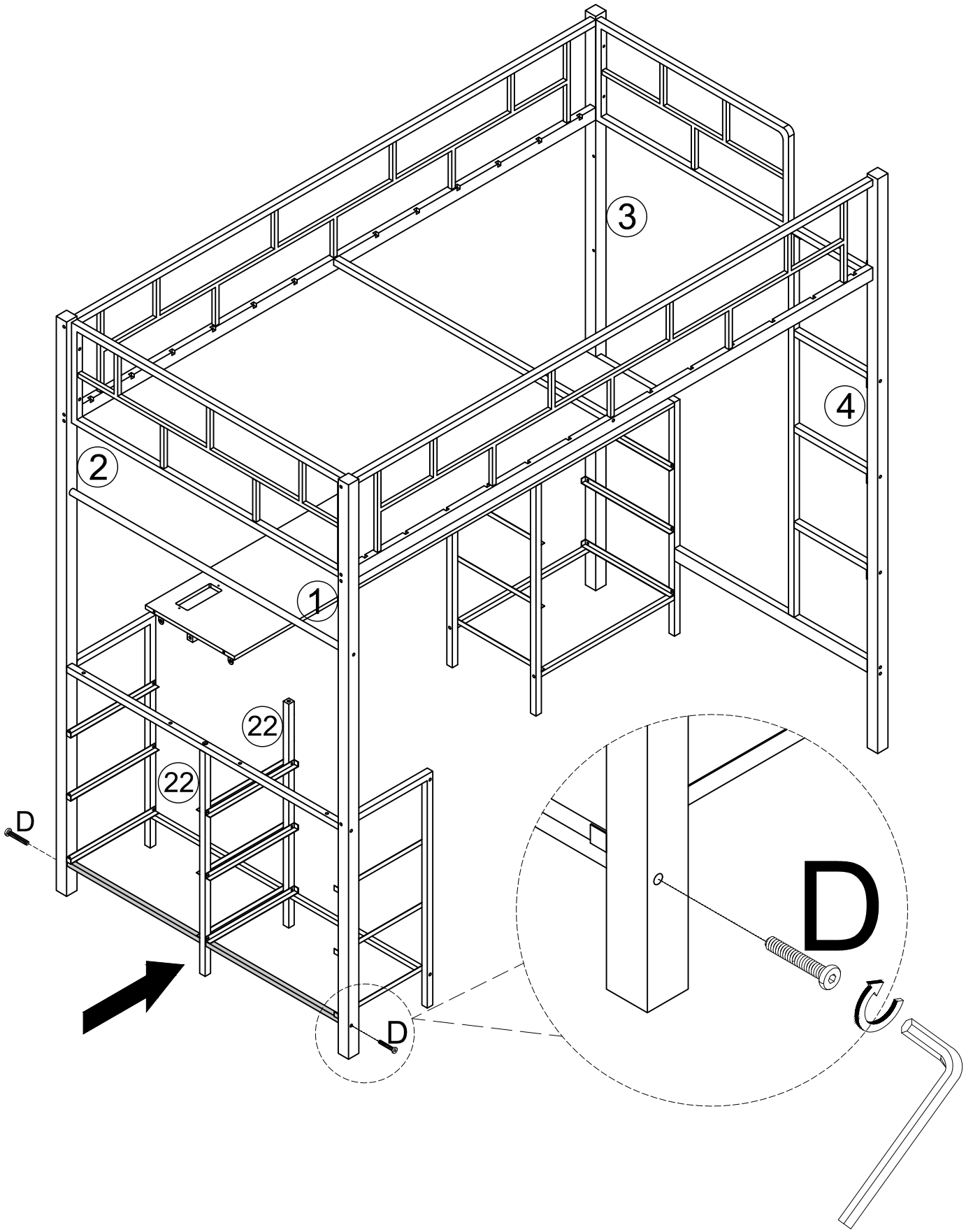

	D*2PCS

Assembly Steps / Montageschritte

STEP 26

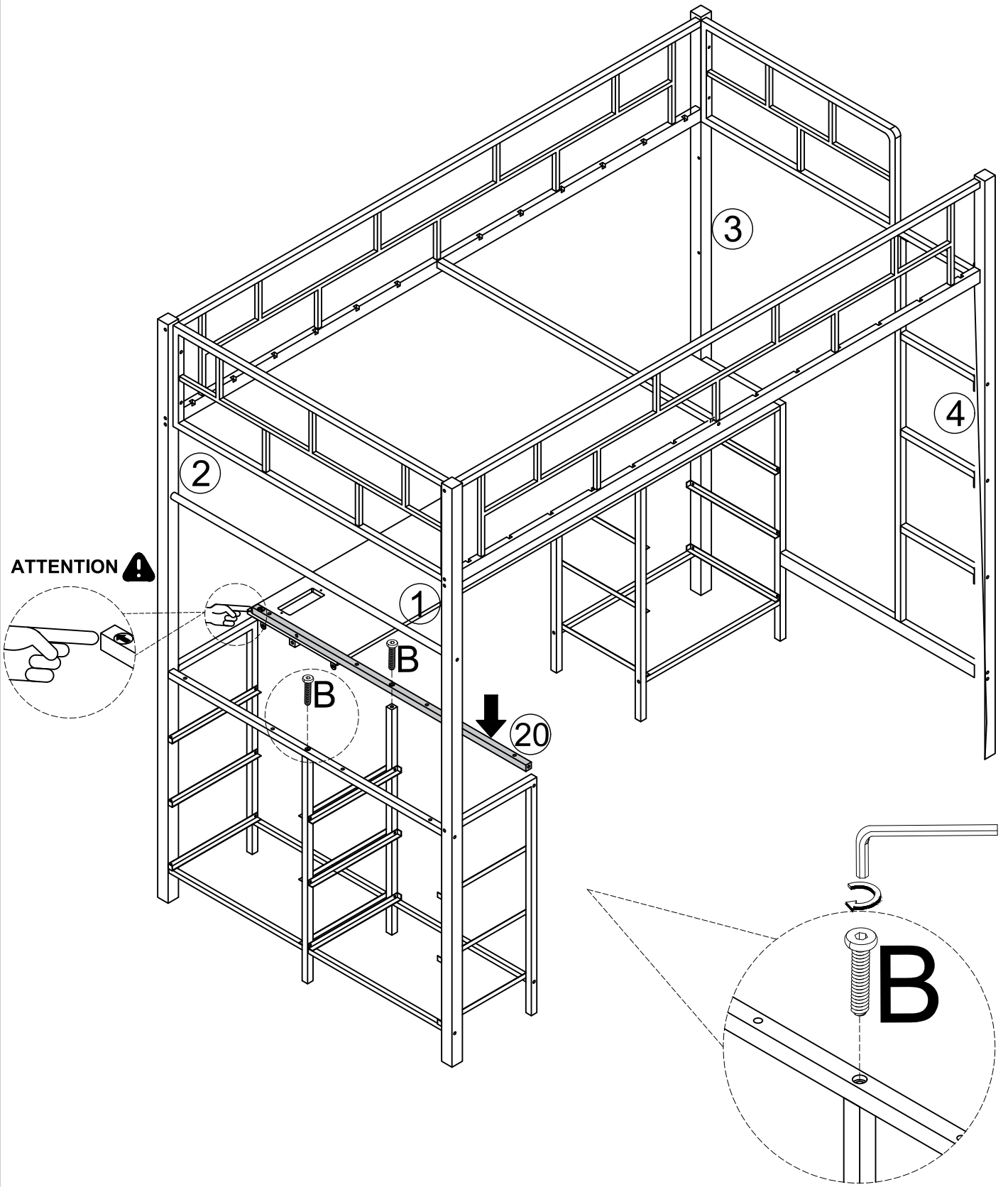

	B*2PCS

Assembly Steps / Montageschritte

STEP 27

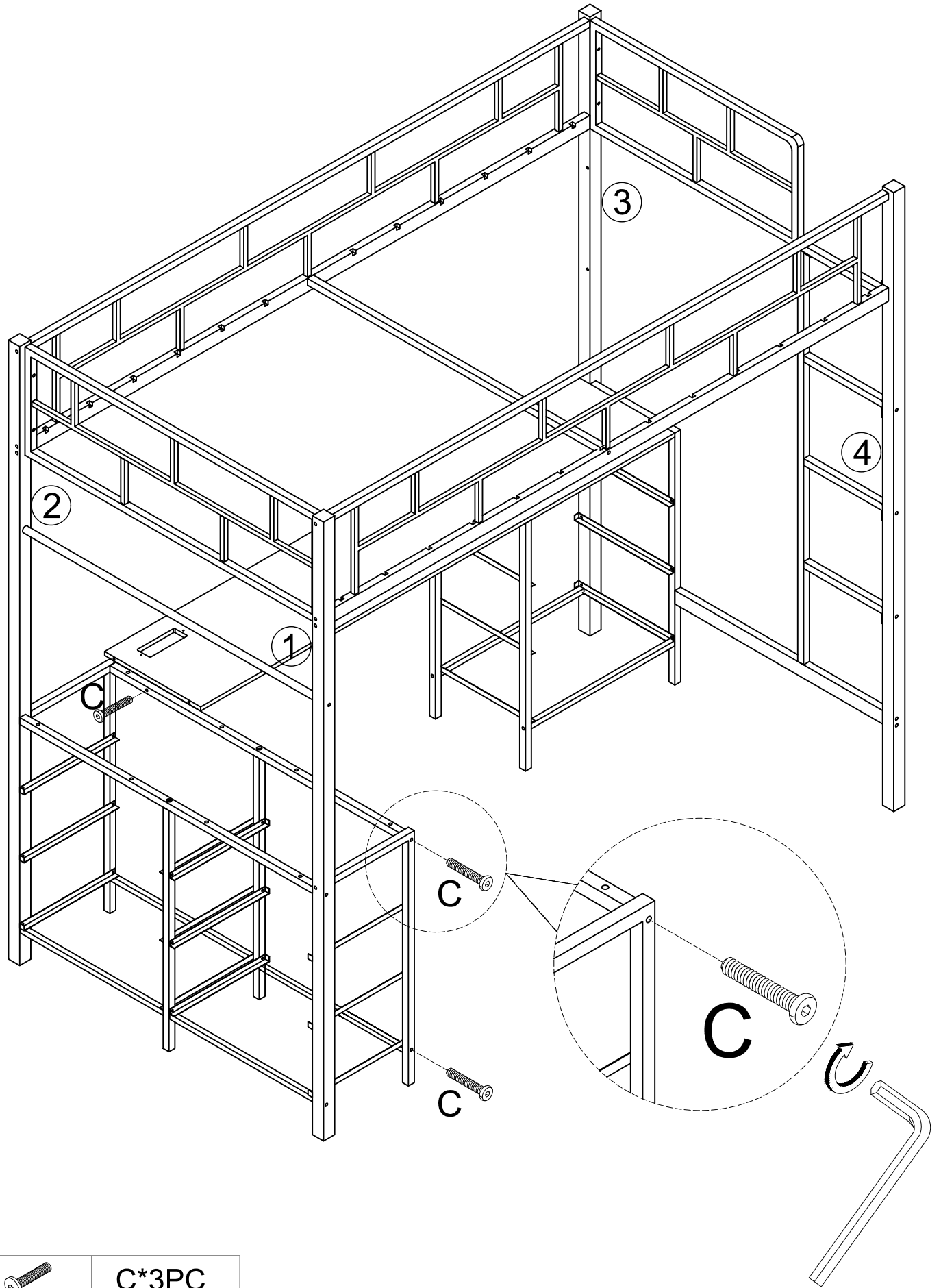

	C*3PC

Assembly Steps / Montageschritte

STEP 28

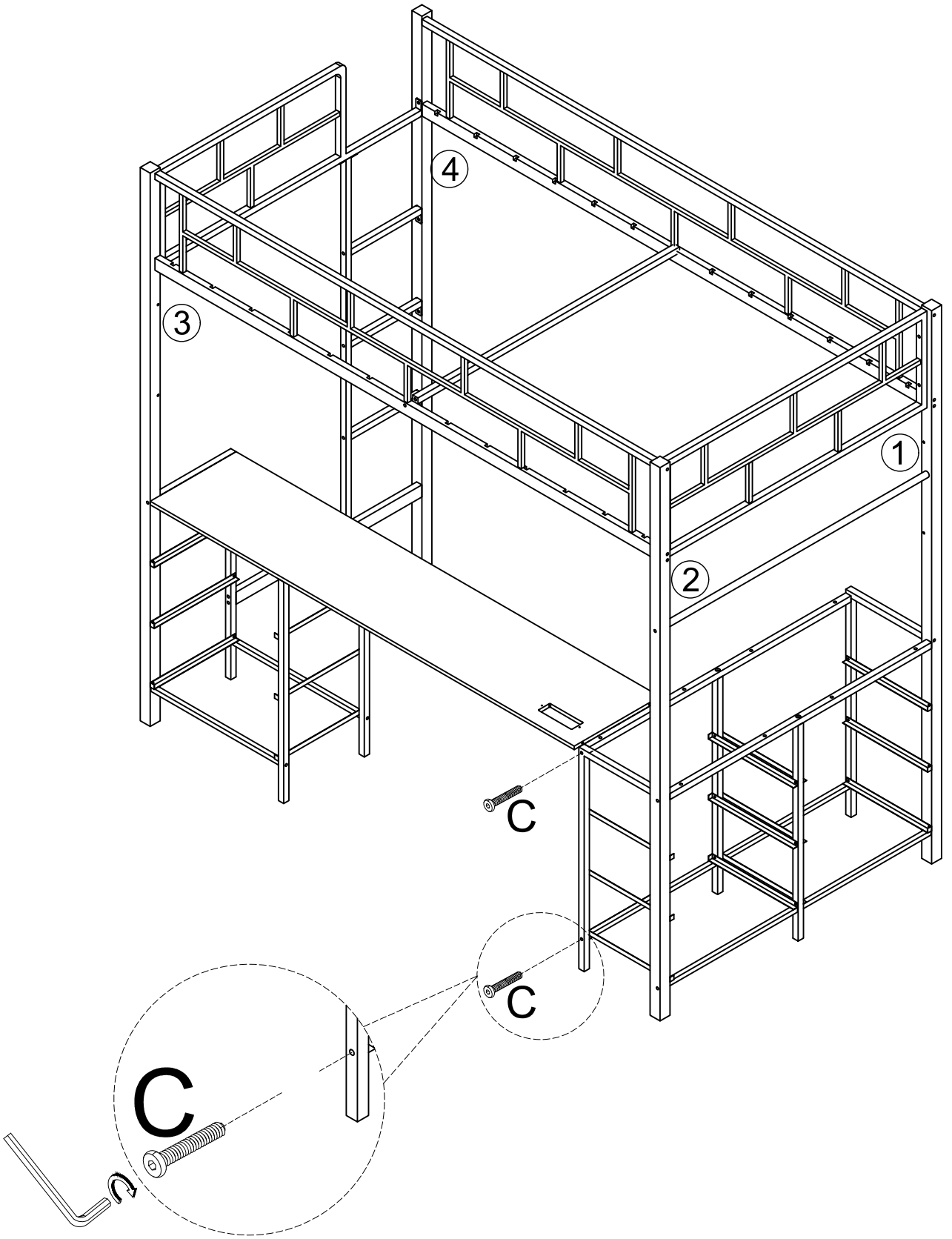

	C*2PC

Assembly Steps / Montageschritte

STEP 29

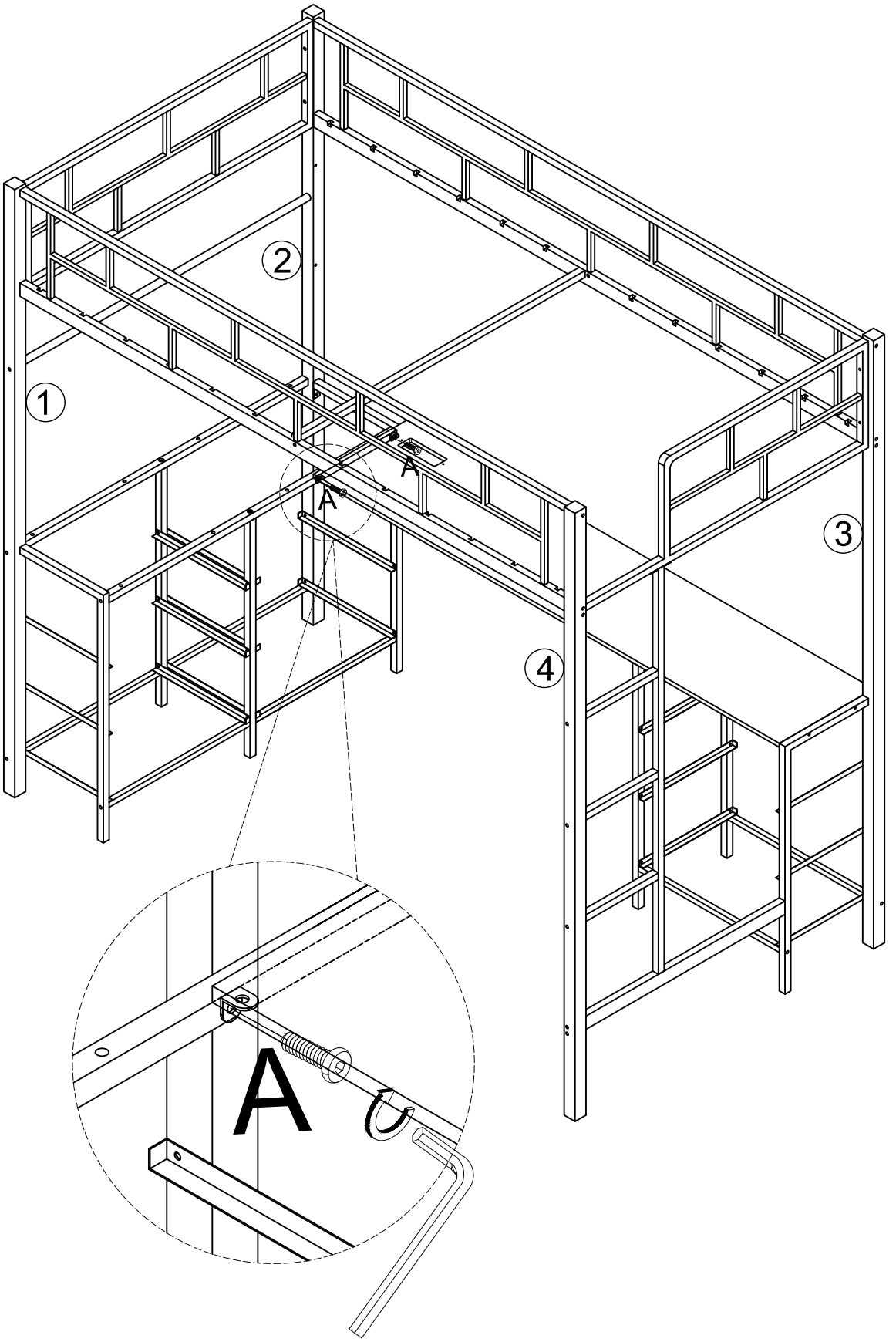

	A*2PCS

Assembly Steps / Montageschritte

STEP 30

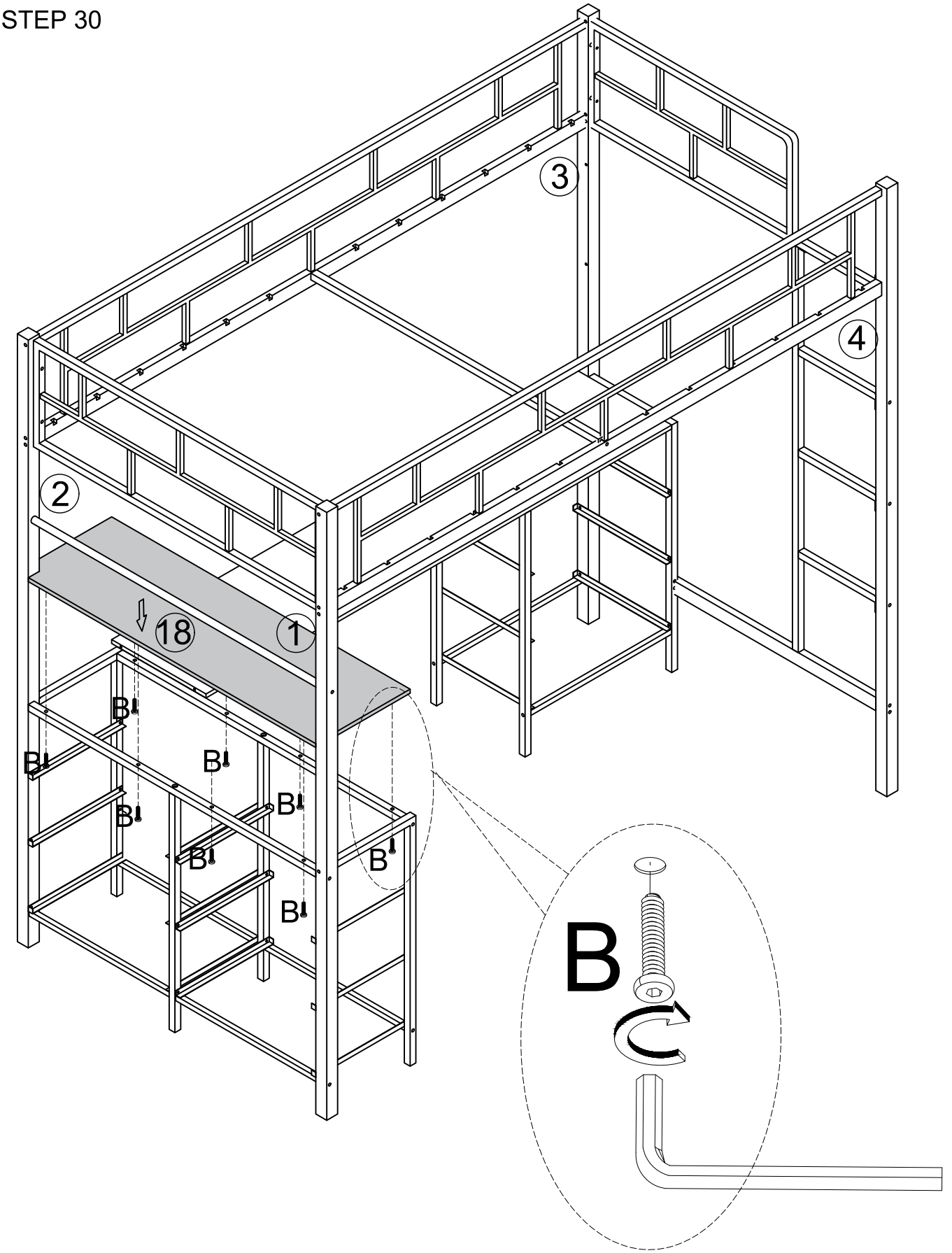

	B*8PCS

Assembly Steps / Montageschritte

STEP 31

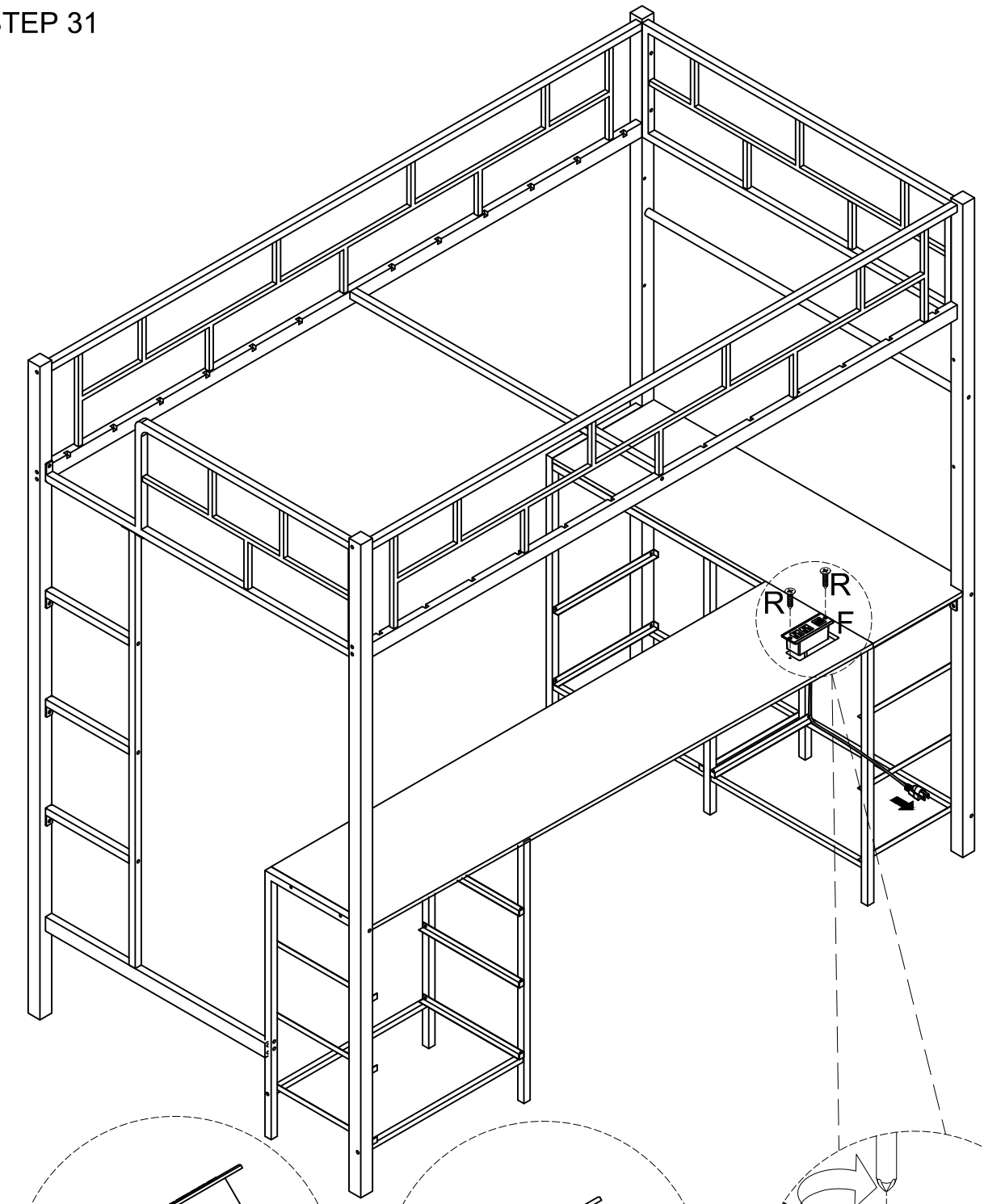

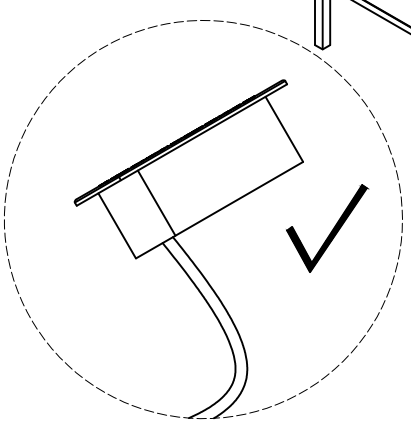

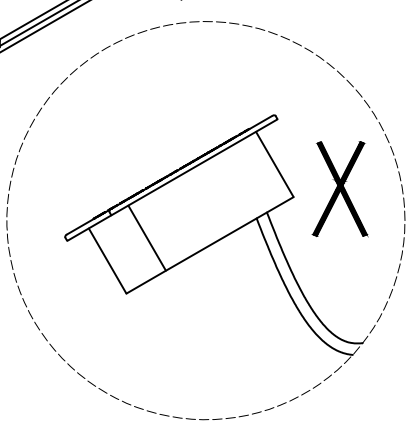

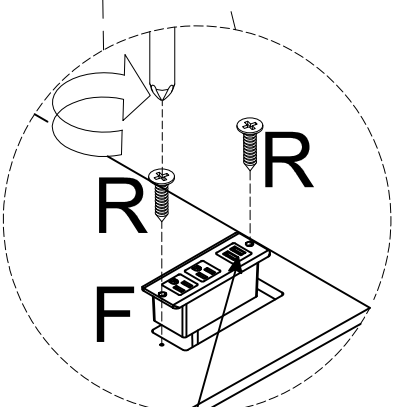

	F*1PC
	R*2PCS

- USB ports facing left.

STEP 32

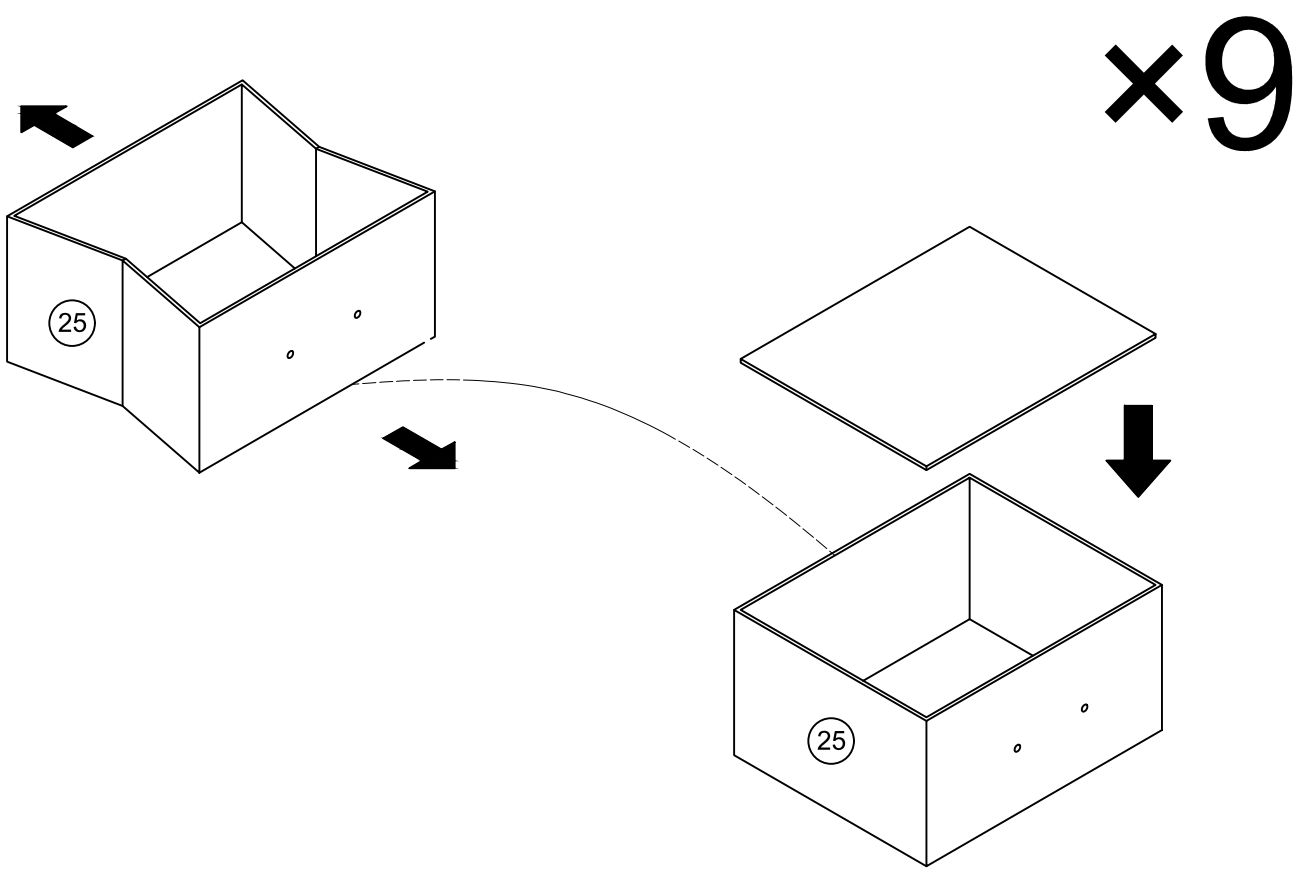

STEP 33

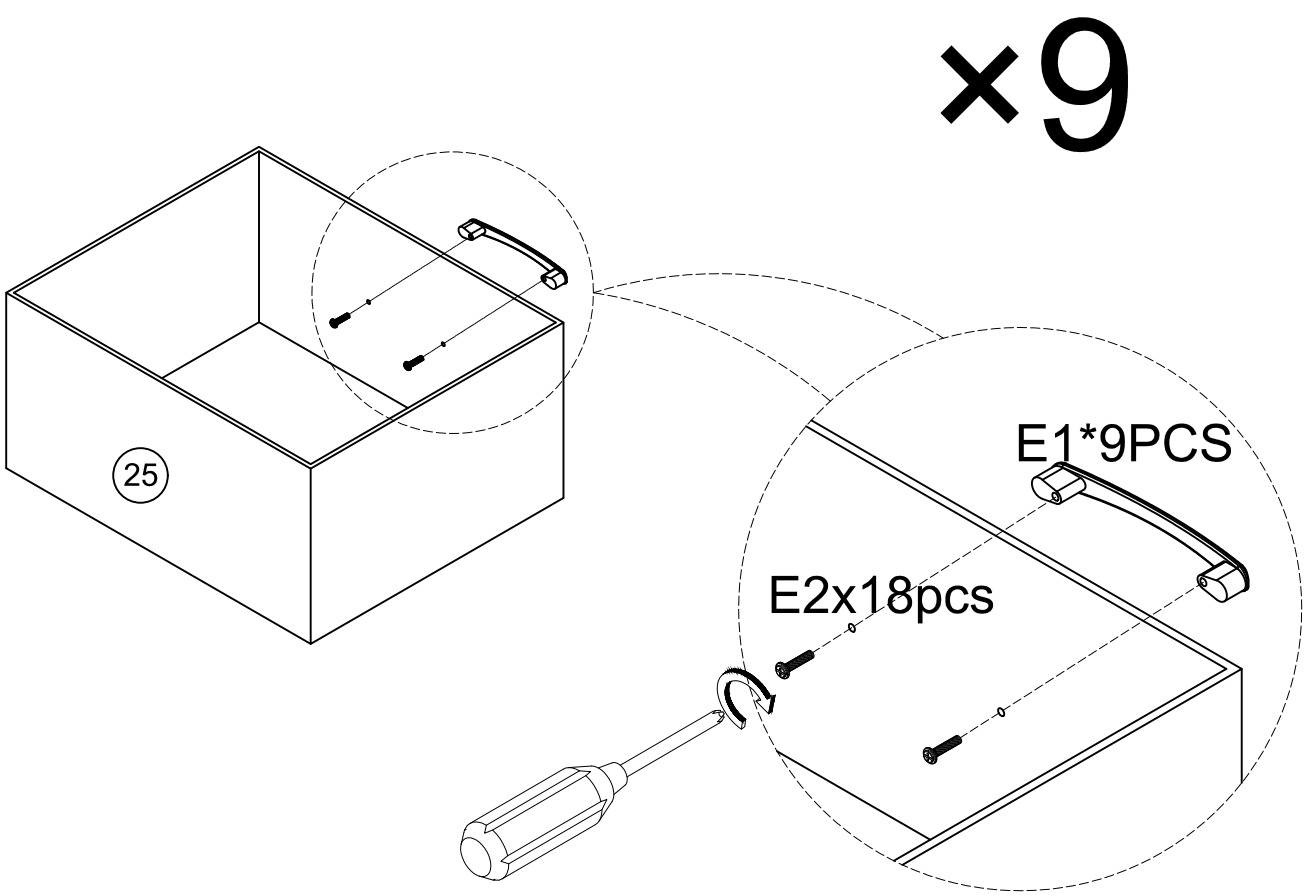

	E1*9PCS
	E2*18PCS

Assembly Steps / Montageschritte

STEP 34

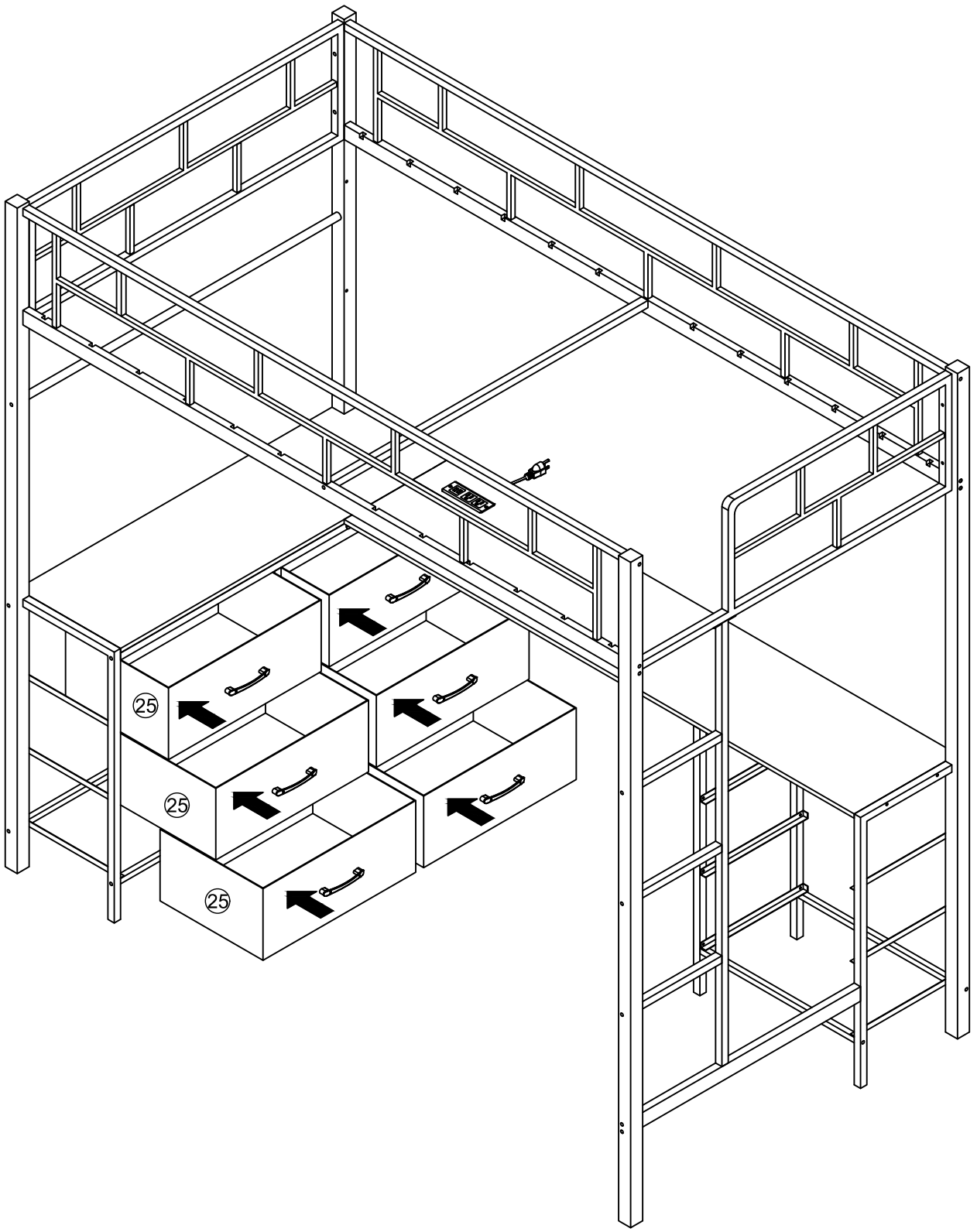

Assembly Steps / Montageschritte

STEP 35

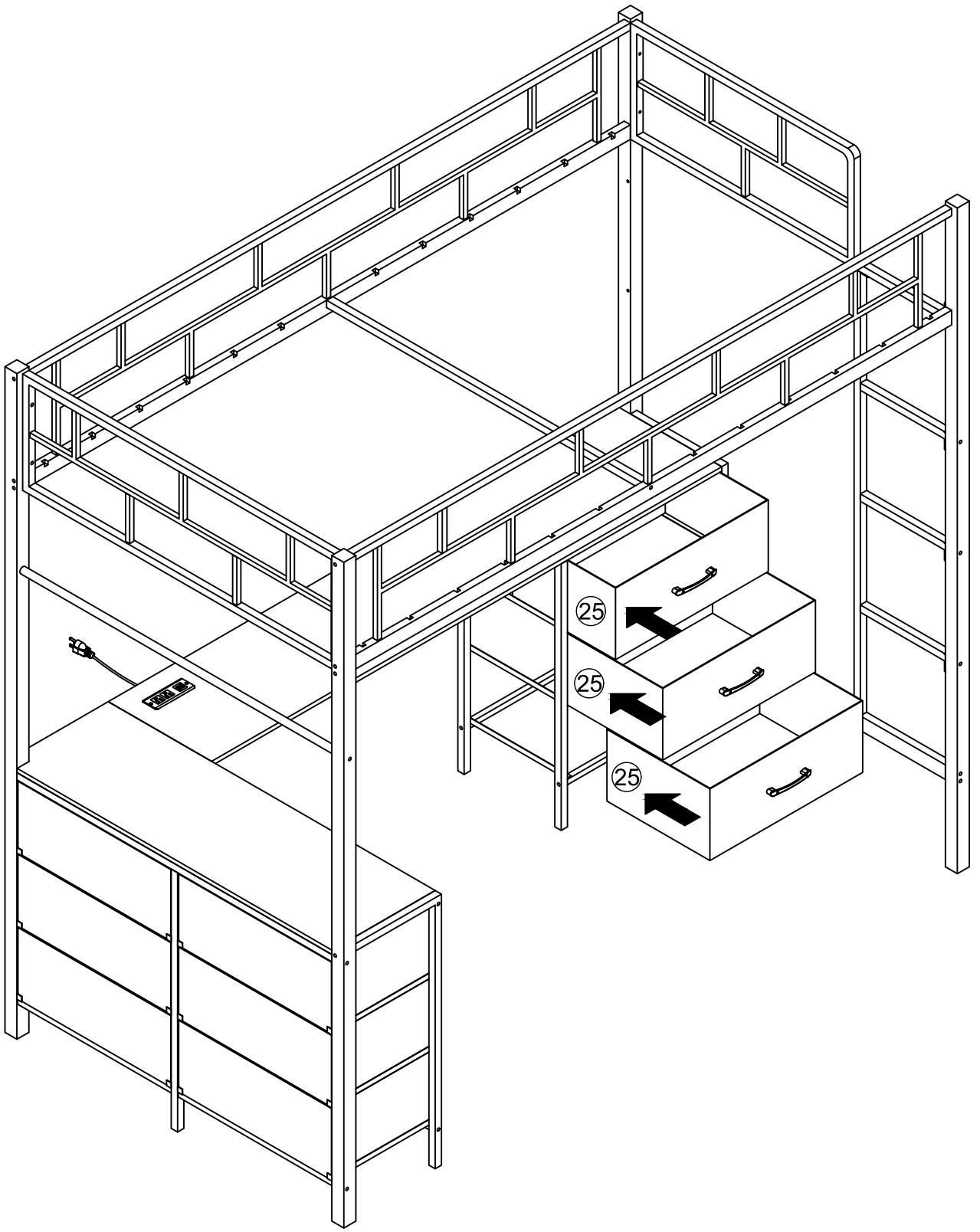

STEP 36

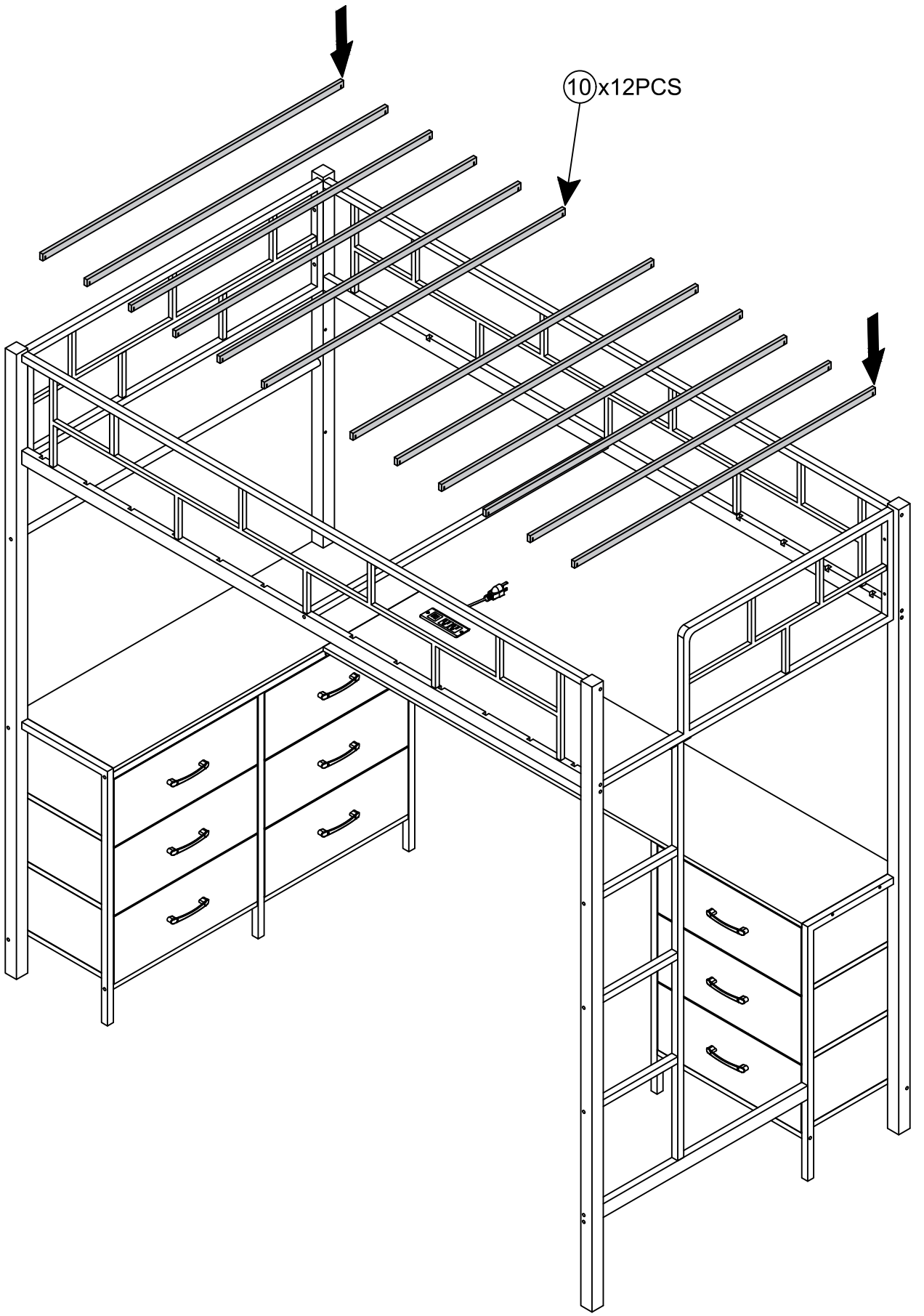

Assembly Steps / Montageschritte

STEP 37

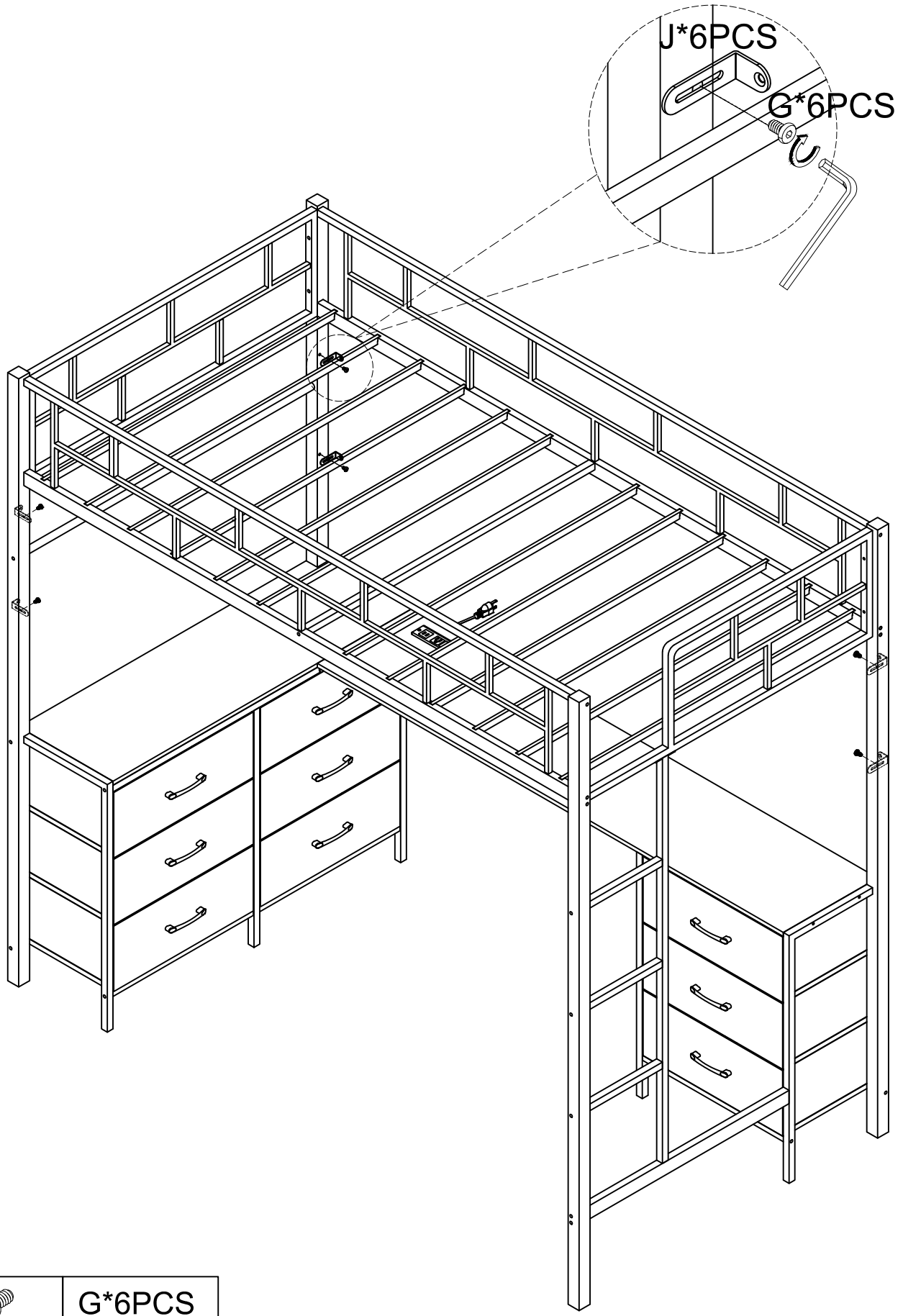

	G*6PCS
	J*6PCS

Assembly Steps / Montageschritte

STEP 38

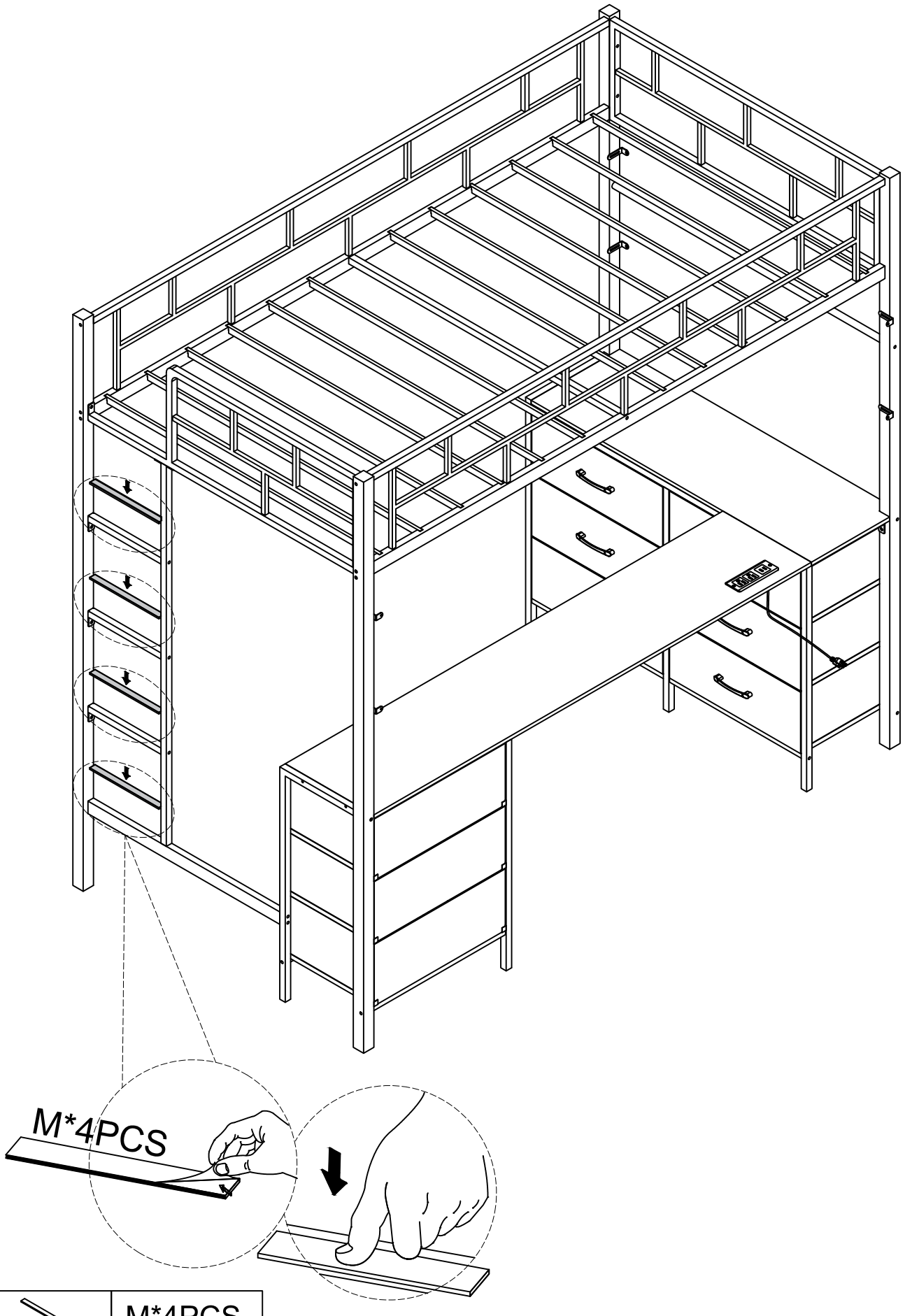

	M*4PCS

Assembly Steps / Montageschritte

STEP 39

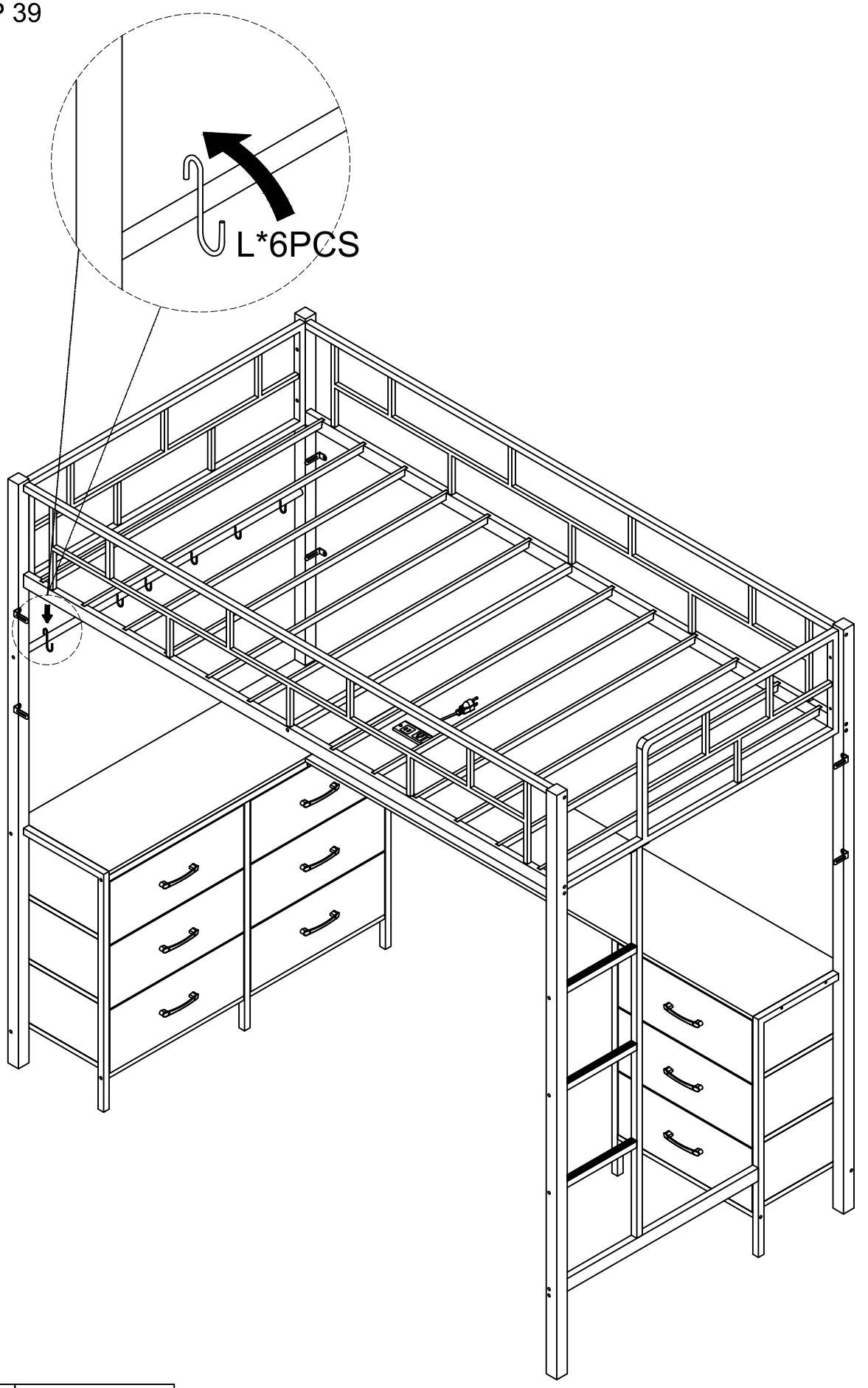

	L*6PCS

STEP 40

ATTENTION

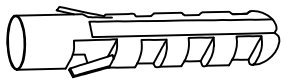

① Chose your desired location on the wall, have your friend hold the product in place and use a pencil to mark where the anchor will go.

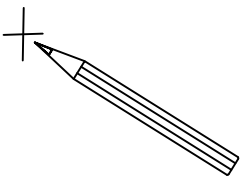

② Please pre-drill holes on the wall with a drill bit that'slarger than the wall anchors.

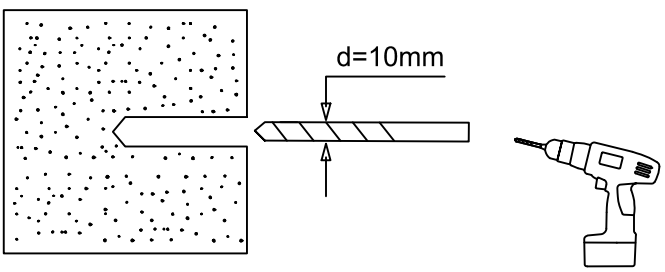

③ Push the wall anchor gently into the pre-drilled hole.

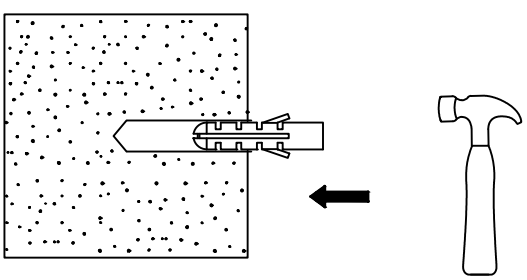

④ Drive the screws with a screwdriver into the wall anchor to complete the installation.

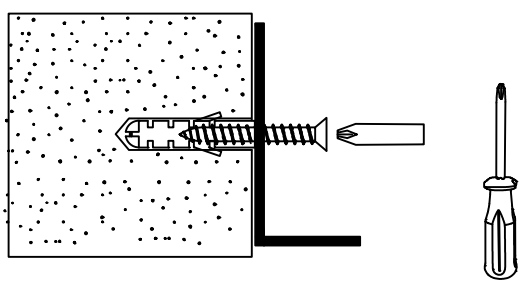

STEP 41

ATTENTION

- Check for hidden pipes and cables before drilling.

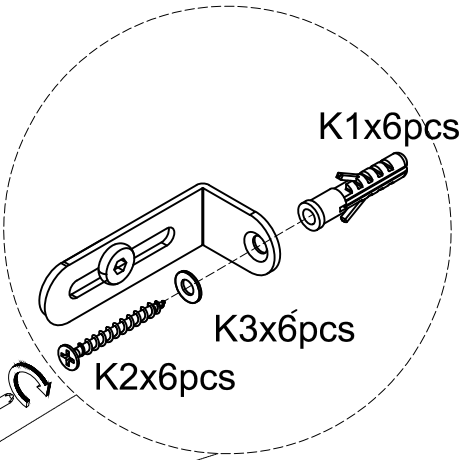

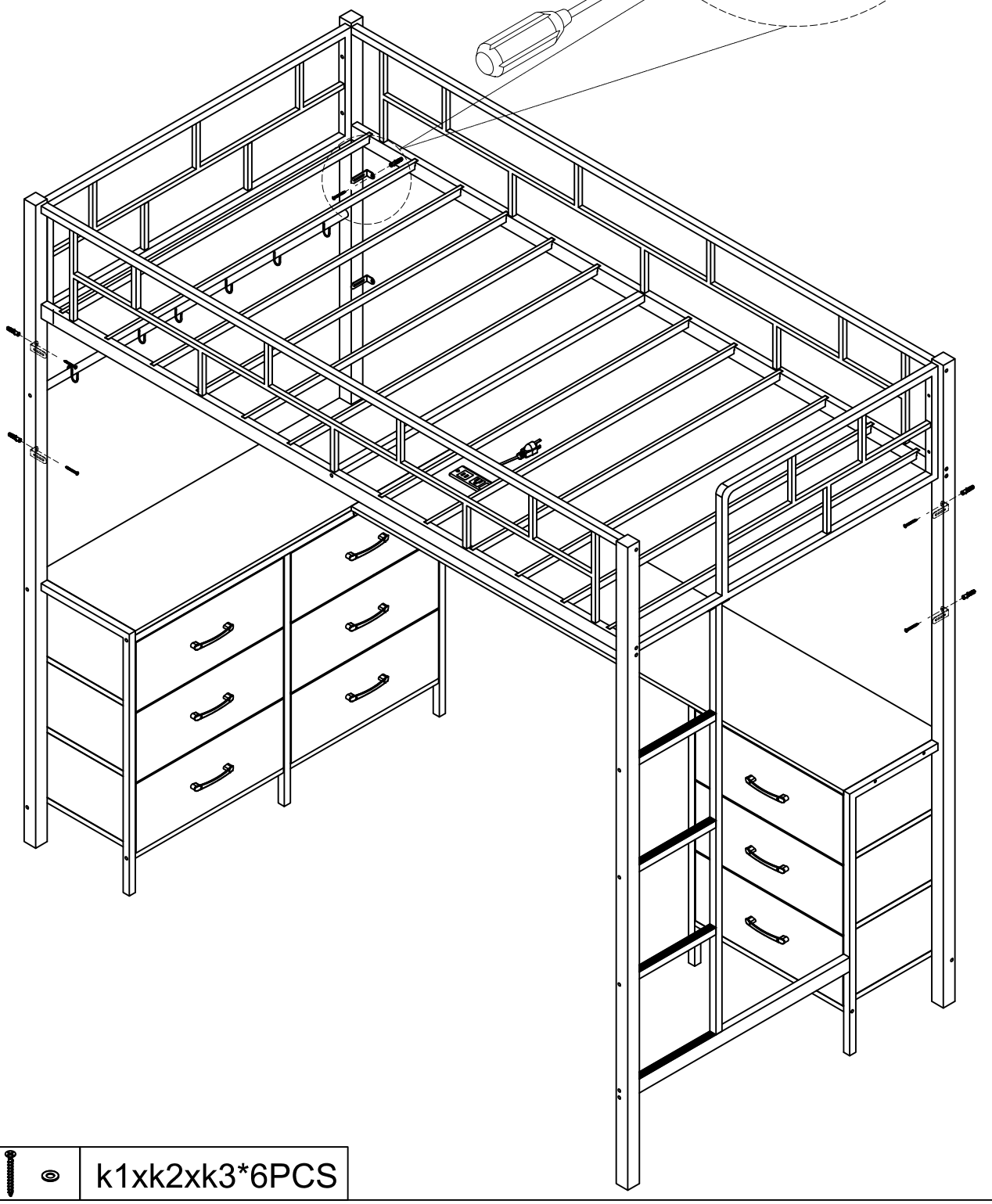

	k1xk2xk3*6PCS

STEP 42



Tip:
Use a hairdryer on low heat to effectively loosen the adhesive on paper stickers and gently peel off. If there's any leftover adhesive, please use a damp cloth, rubbing alcohol, or a specialized adhesive remover.