Egg Rocking Chair
Installation Instructions

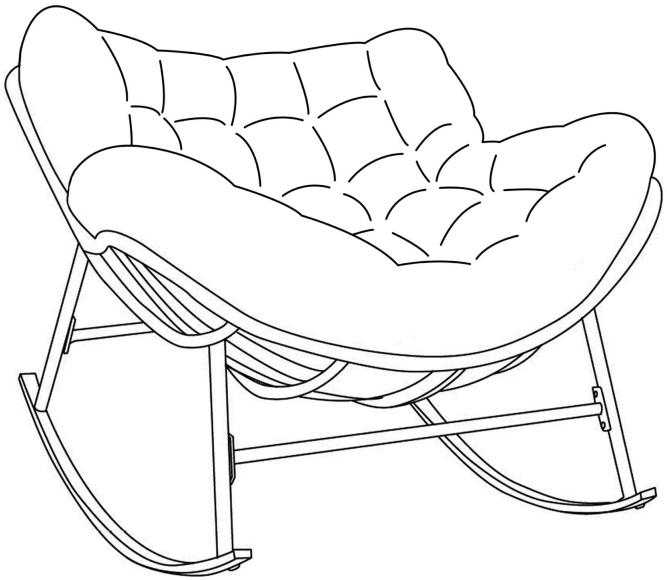

EASY ASSEMBLY
Assemble in 25 minutes or less

Scan to get a quick assembly guide, dedicated support, plusmember access to exclusive perks & extended warranty.

Parts List

Accessories		A	1		B	1		C	1		D	1
	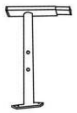	E	2		F	2		G	2		H	2
		I	1	Notice: Please check the accessories before installation, if there is any problem, feel free to contact us!								
Tools		M-6,55mm	8		M-6,40mm	12		M-6,30mm	8	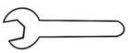	Wrench	
		Hexwrench			Ratchet Wrench							

Notice:

1-Please don't tighten all screws completely at beginning!!

2-Fully tighten after completing the chair seat !!

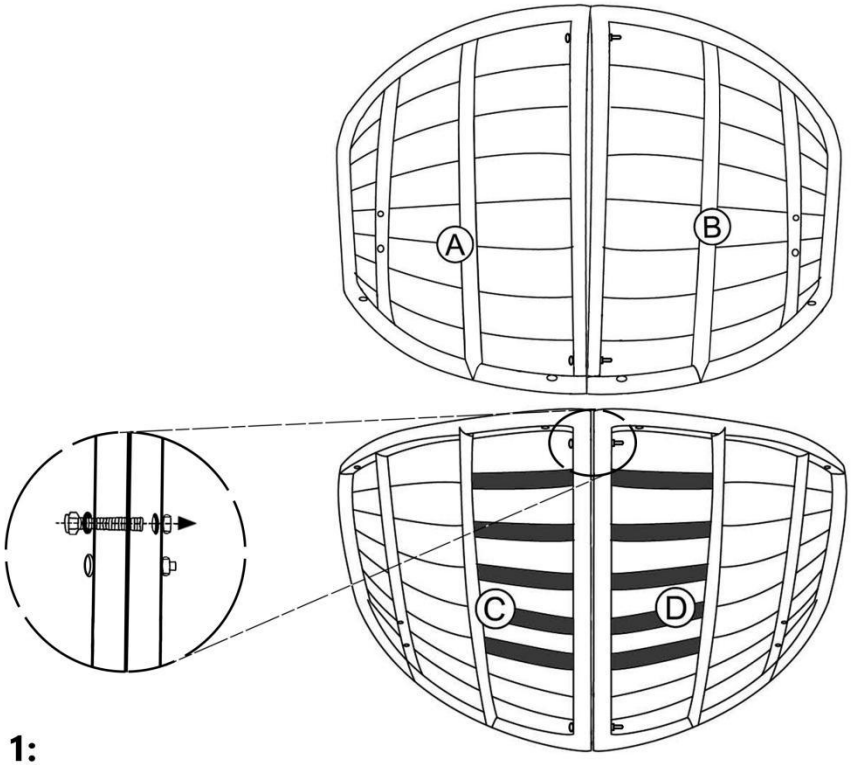

Step 1:

Use 4 (M6, 55mm) screws to assemble accessories (A) & (B), (C) & (D) into 2 unit.

Notice:

1-Please don't tighten all screws completely at beginning!!

2-Fully tighten after completing the chair seat !!

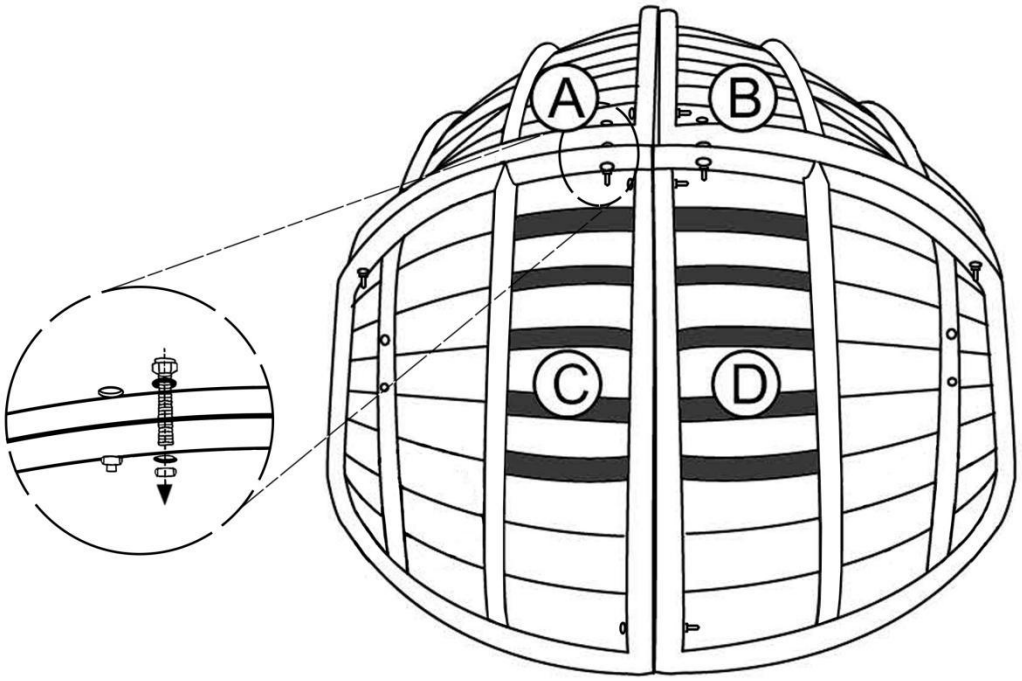

Step 2:

Use 4 (M6, 55mm) screws to assemble accessories 2 unit into one unit.

Step 3:

Insert accessories (E) & (F) into accessory (G).

Use 4 (M6,40mm) screws to secure them.

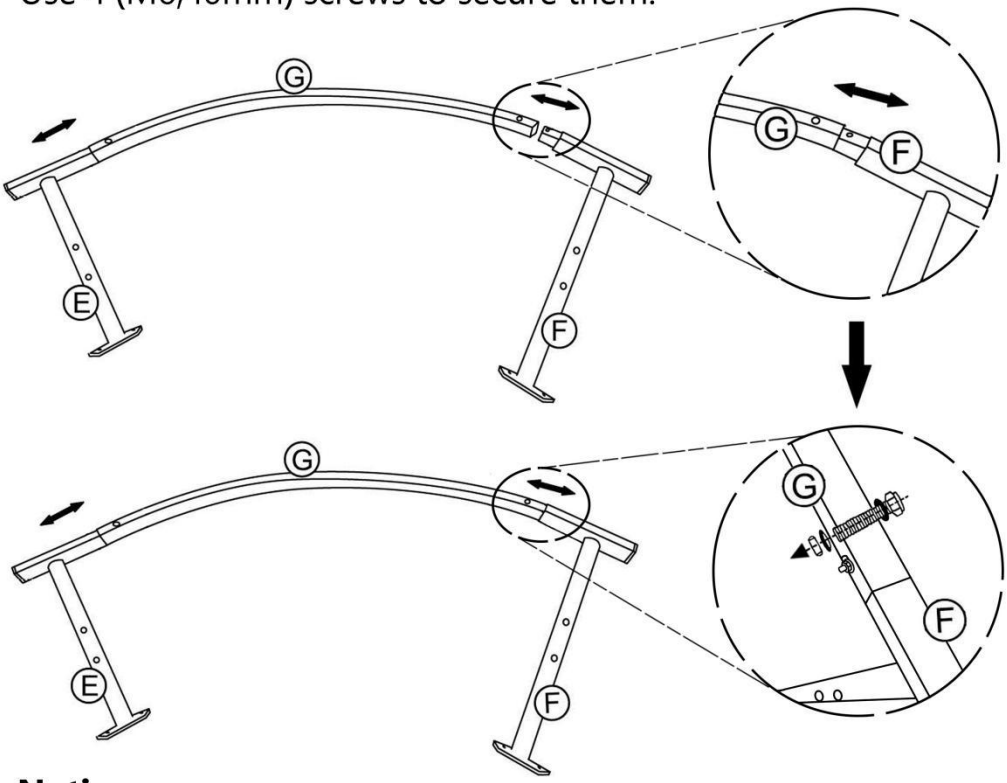

Notice:

1-Please don't tighten all screws completely at beginning!!

2-Fully tighten after completing the chair legs !!

Step 4:

Use 8 (M6,30mm) screws to secure the leg accessories (E) & (F) to the chair seat.

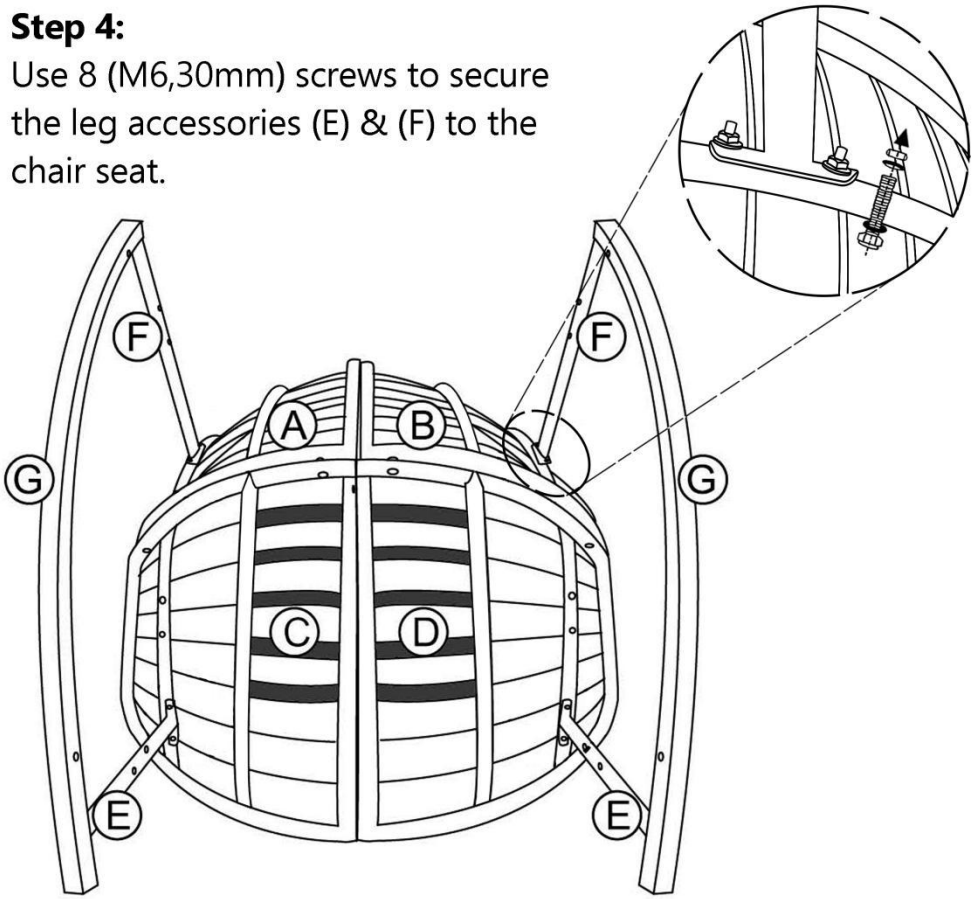

Notice:

1-Please don't tighten all screws completely at beginning!!

2-Fully tighten after completing the chair legs !!

Step 5:

Use 8 (M6,40mm) screws to secure accessory (H) to accessories (E) & (F).

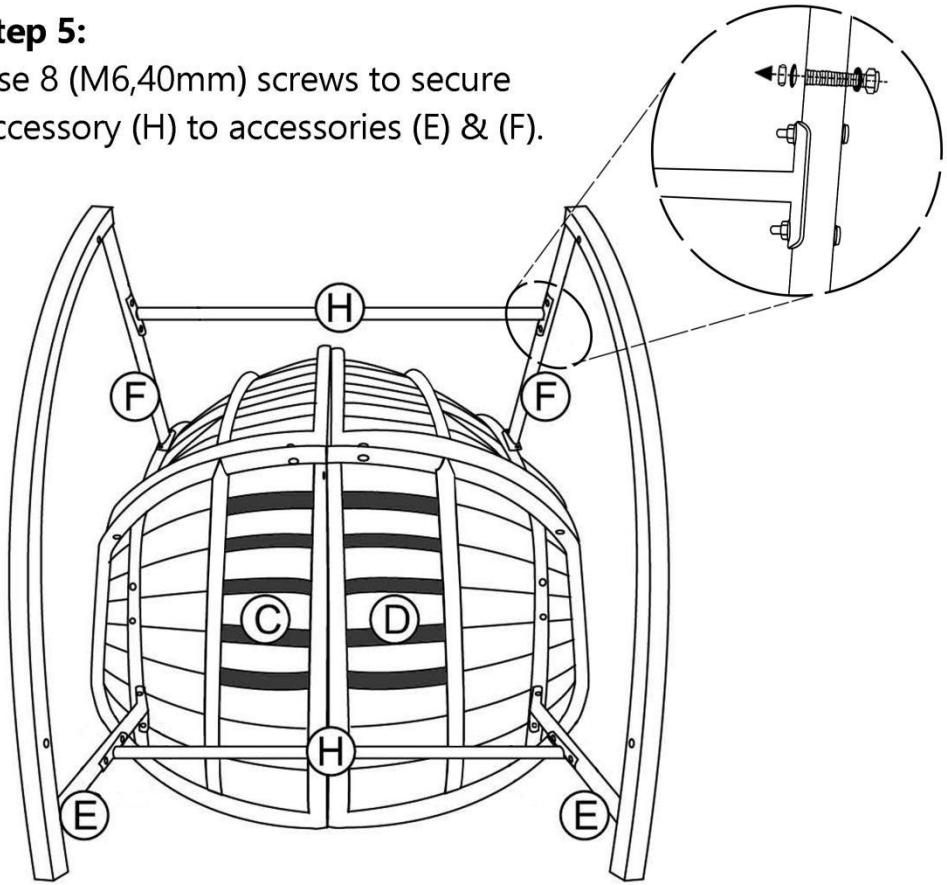

Notice:

1-Please don't tighten all screws completely at beginning!!

2-Fully tighten after completing the chair legs !!

Notice:

The iron sheets on both sides of accessory (H) are tilted.
When installing accessory (H), please ensure that
the outward-tilted iron sheets are facing the rocker's feet.

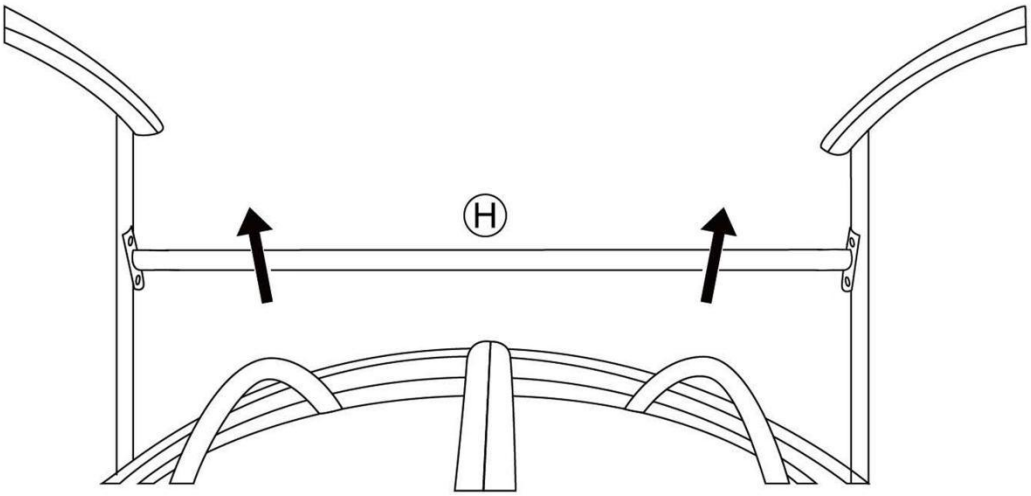

Step 6:

Tighten all the screws.

Place accessory (I) on the chair.

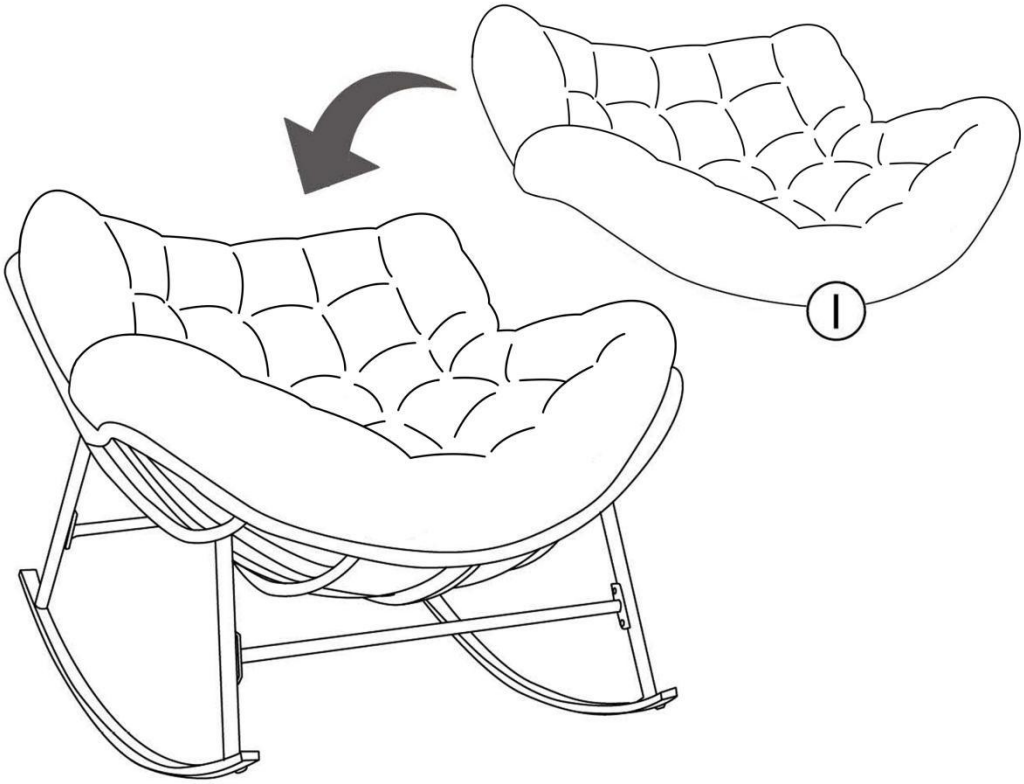

Egg Rocking Chair

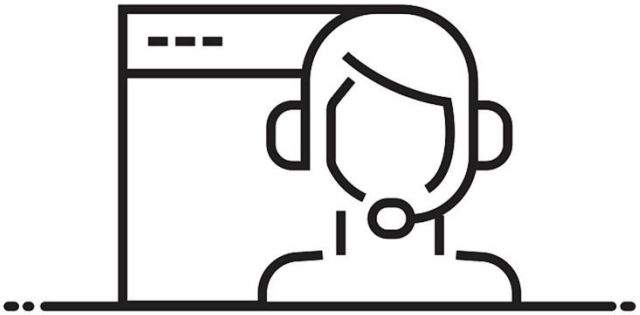

ONLINE SUPPORT

Please read the installation guide carefully before installation
If you have any questions during the installation process
you can contact us and we will provide you a detailed guidance

Online Support: outdoorservice@kannelfurniture.com