ASSEMBLY INSTRUCTION
CABINET

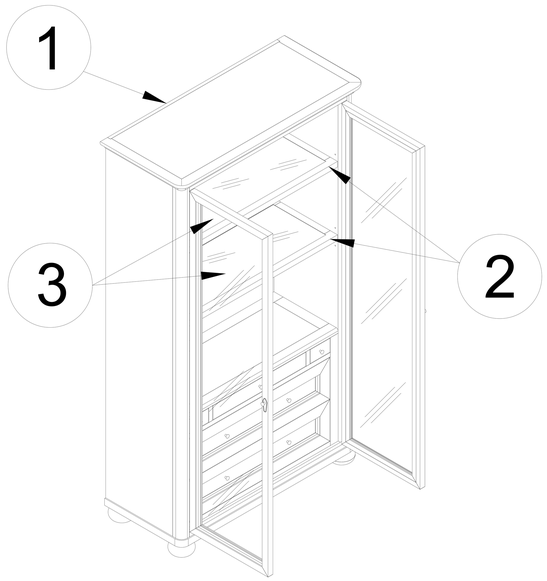

Part List

1		Cabinet	1
2	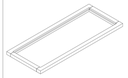	Shelf	2
3		Glass Shelf	2

Name of Hardware

A		Shelf Support	8
B		Screw M3x15mm	8
C		Plug In	1

Step 1

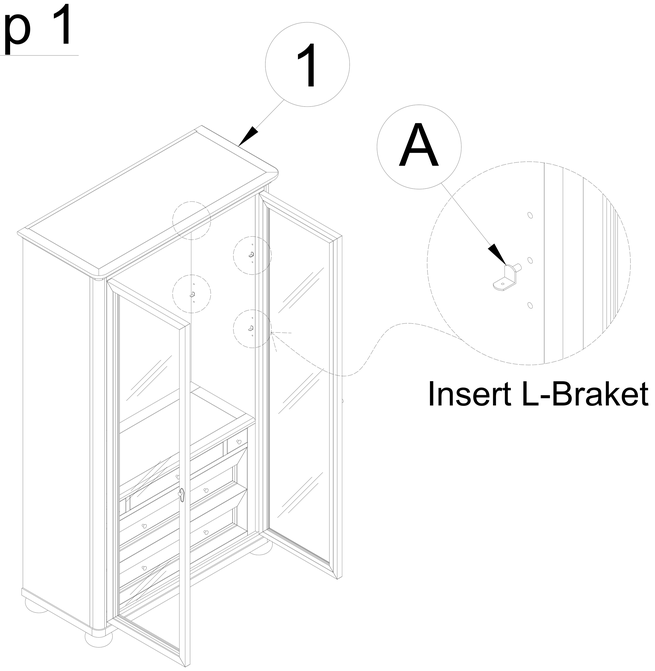

MADE IN VIETNAM

Step 2

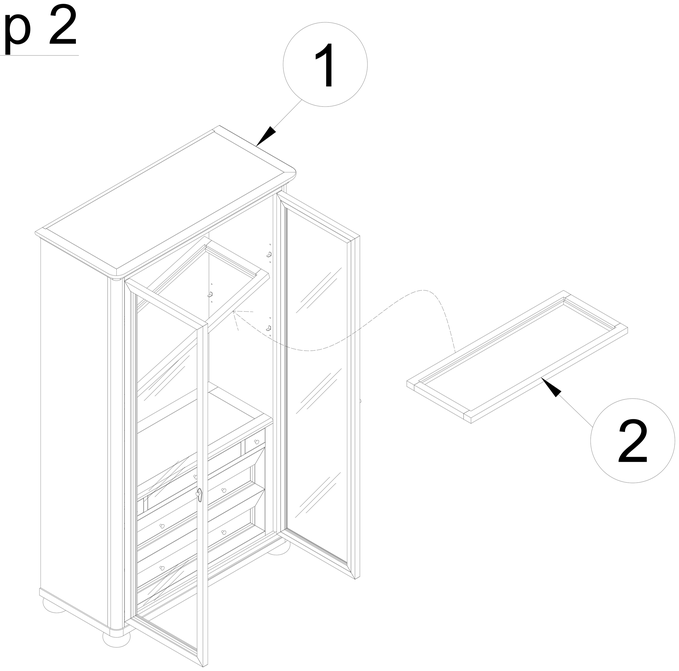

Step 3

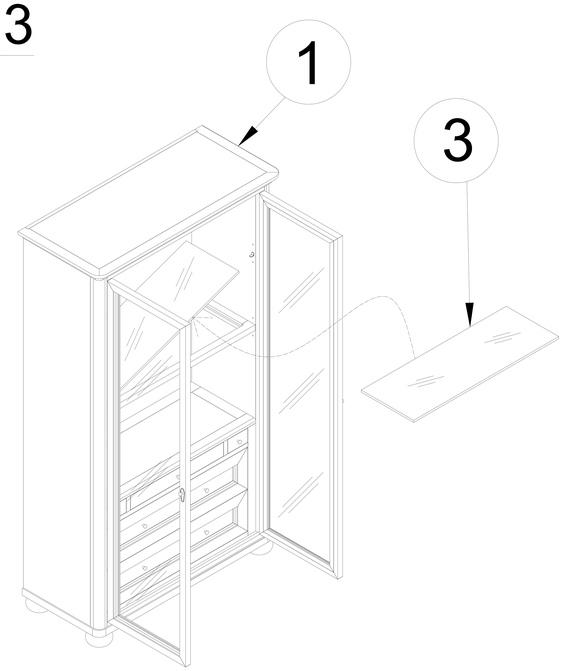

ASSEMBLY INSTRUCTION
CABINET

Step 4

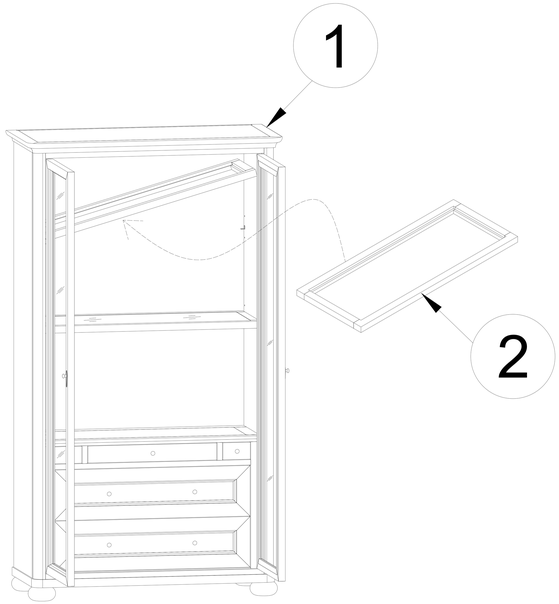

Step 5

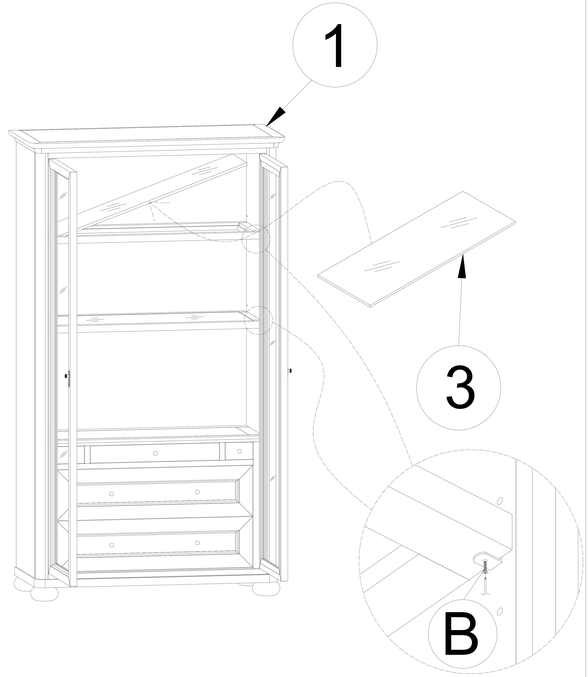

Step 6

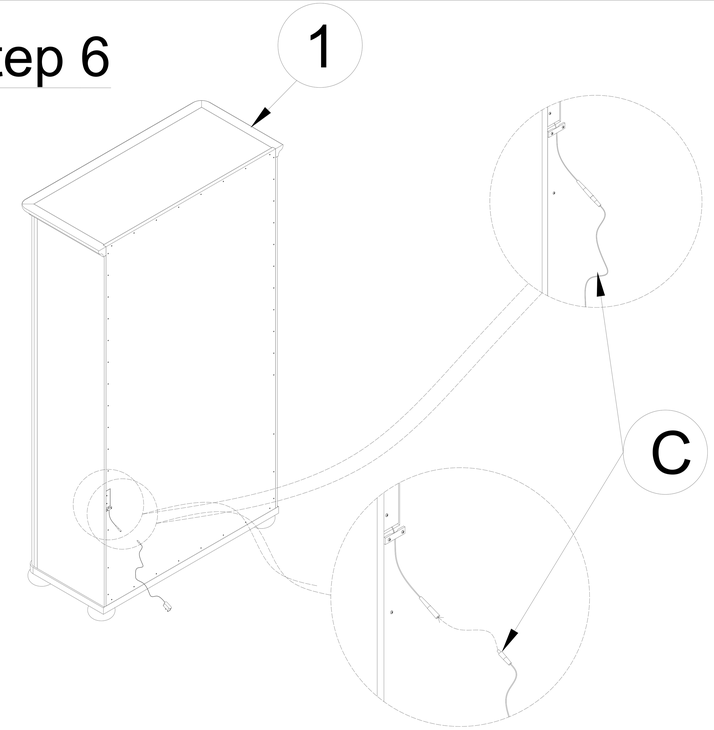

Step 7

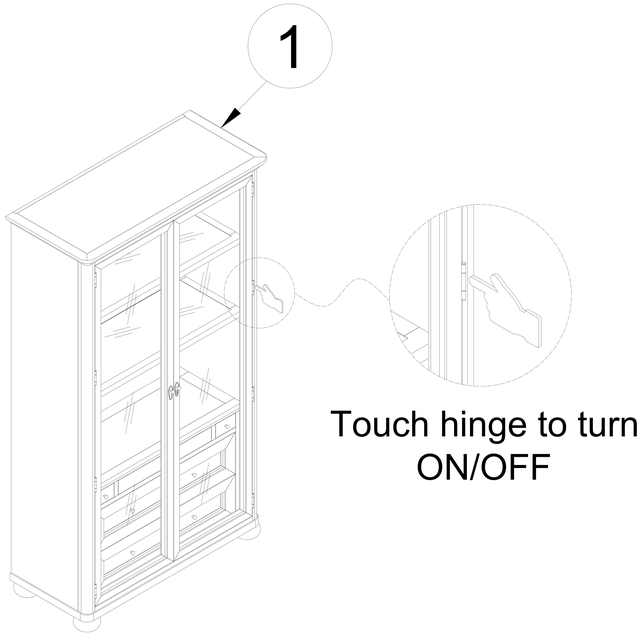

MADE IN VIETNAM

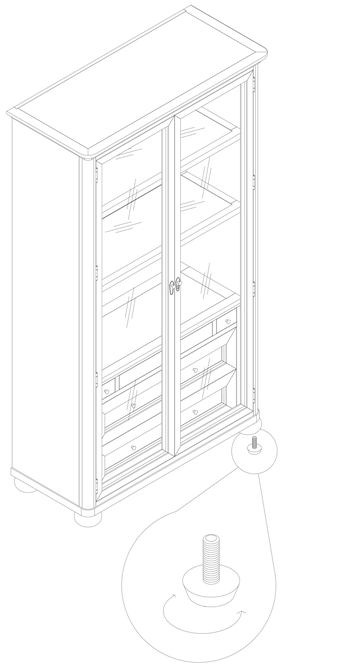

FINISH