# INSTRUCTION MANUAL

## Dining Chair

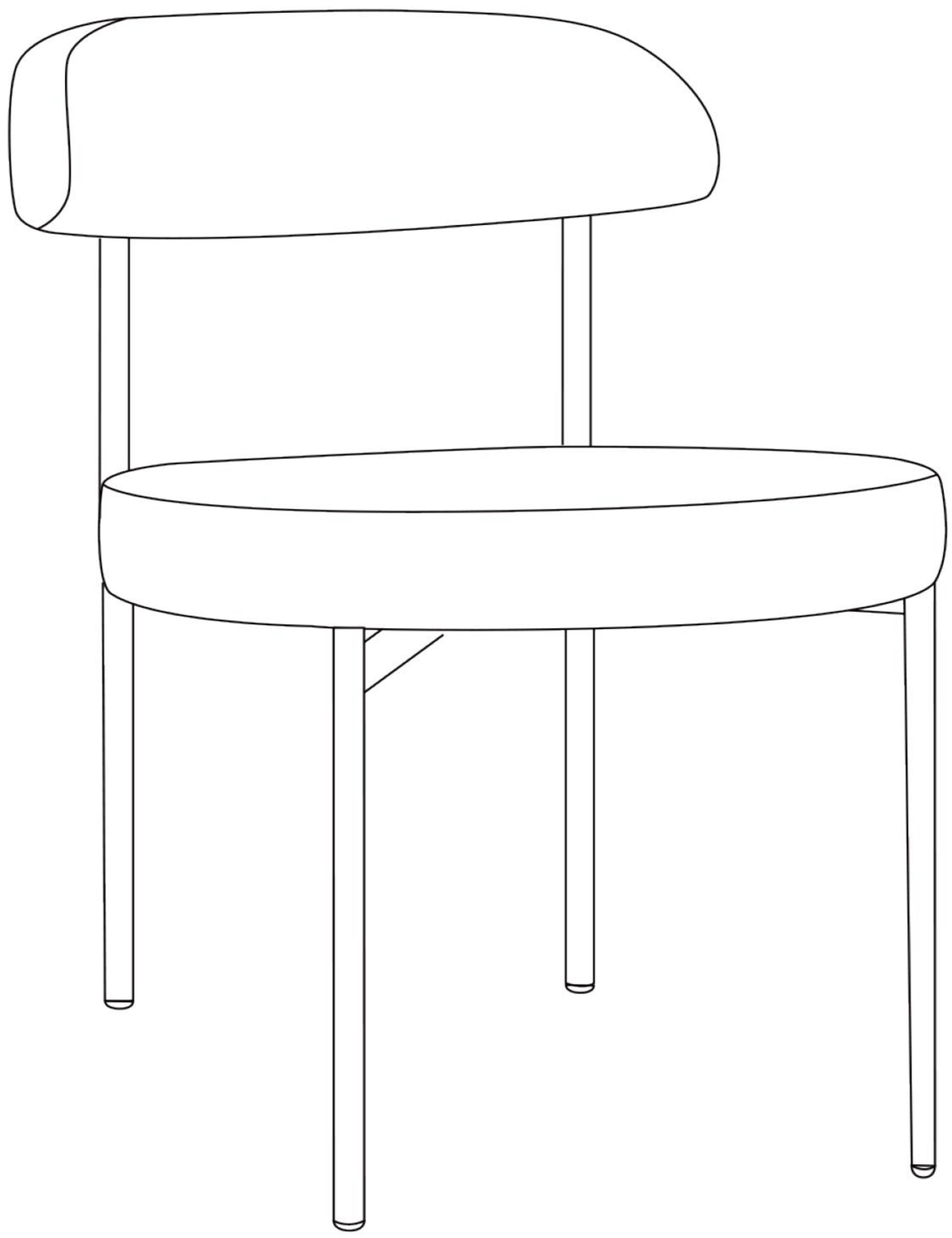

| | | |
|---|---|---|
| 1 | | 1 |
| 2 | | 1 |
| 3 | | 2 |
| 4 | | 1 |
| 5 | | 1 |
| | | |

| | | |
|---|---|---|
| A | M6x30mm | 1 |
| B | M6x14x1.5mm | 5 |
| C | #4 | 1 |
| D | M6x13mm | 4 |
| E | M6x50mm | 4 |
| F | #5 | 1 |
| G | M8 | 4 |
| H | M6x30mm | 4 |

1

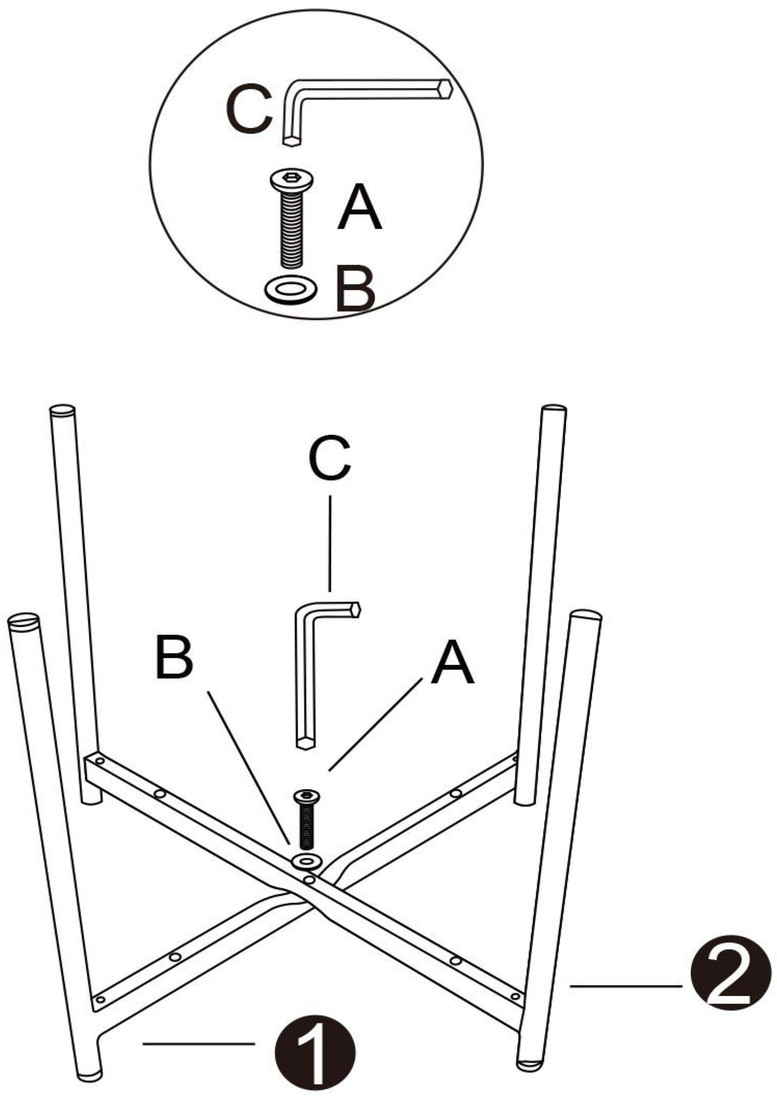


2

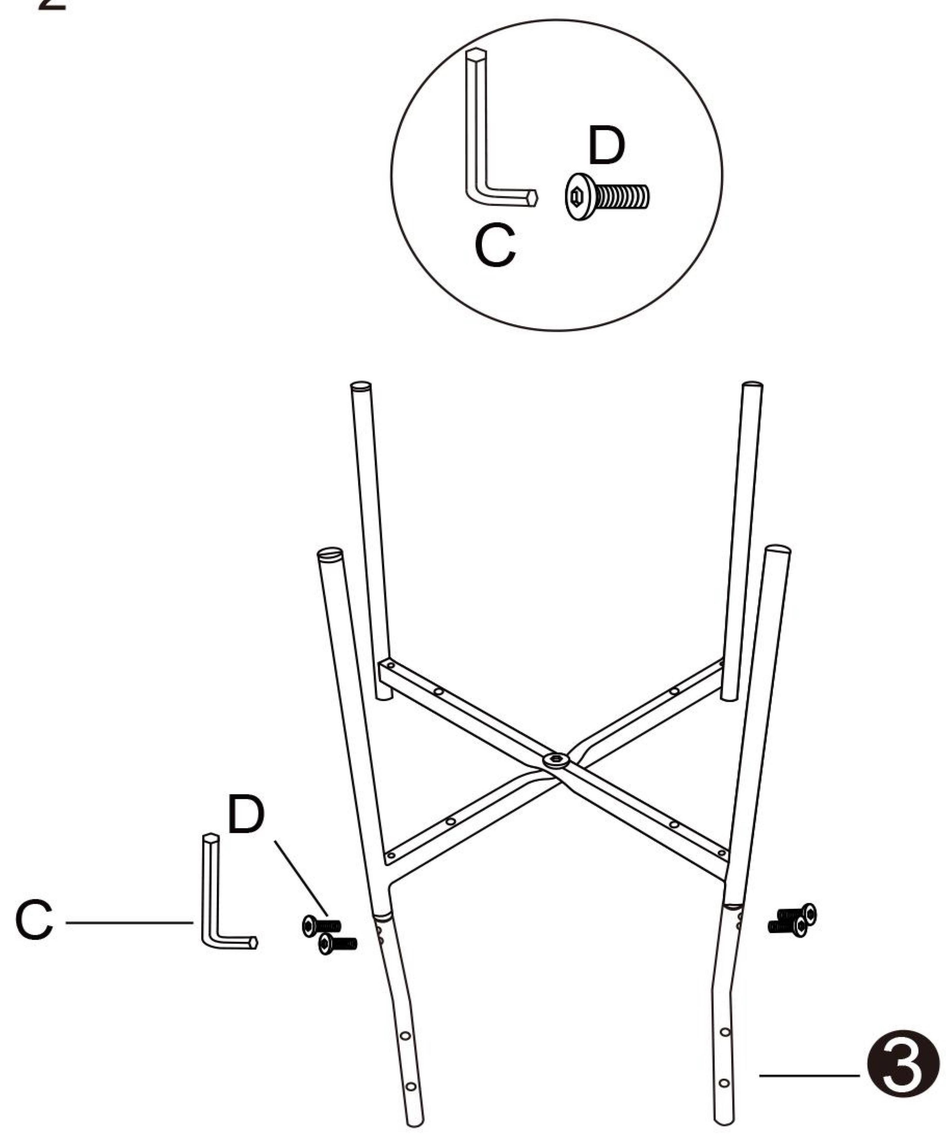

3

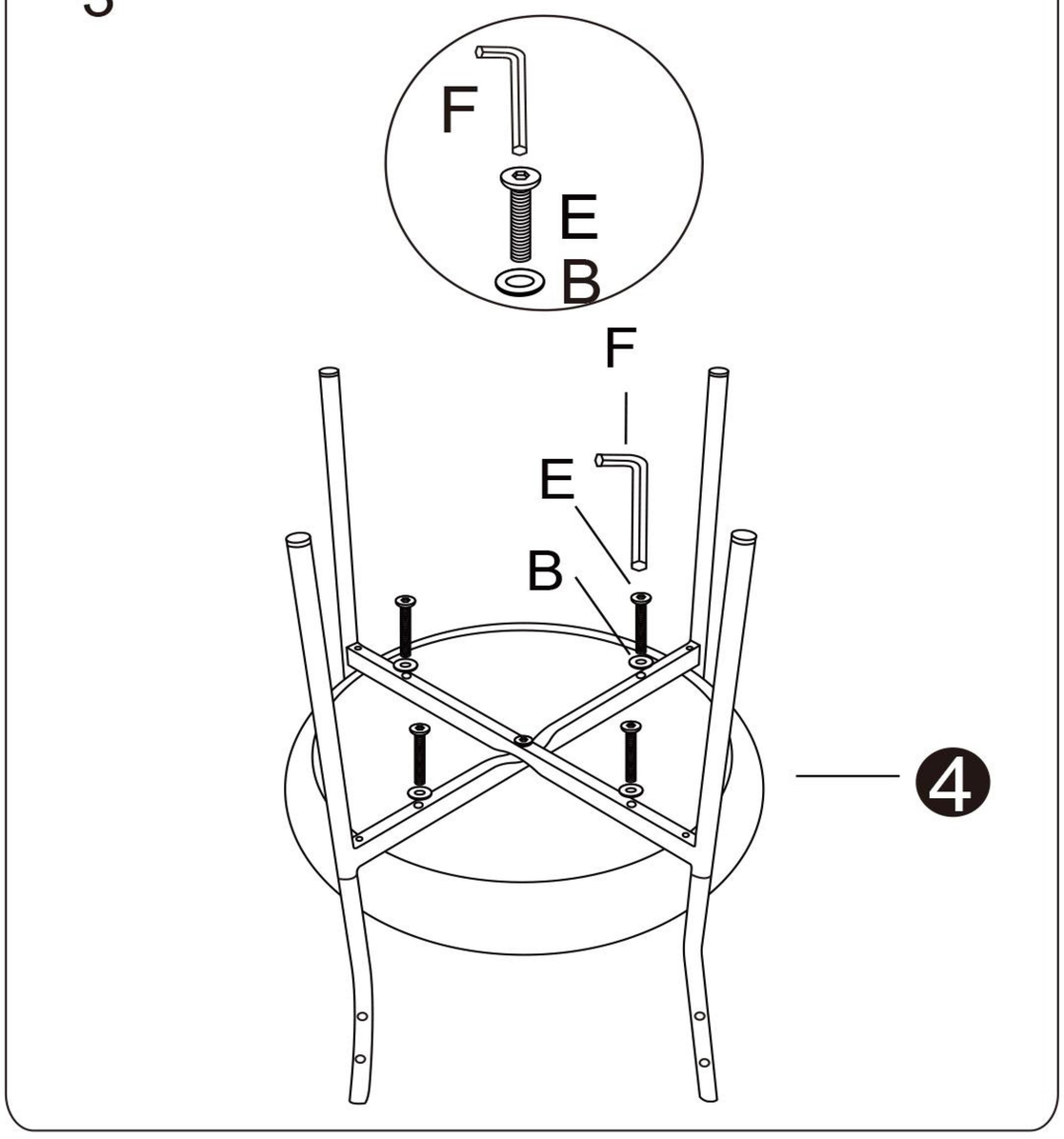


4

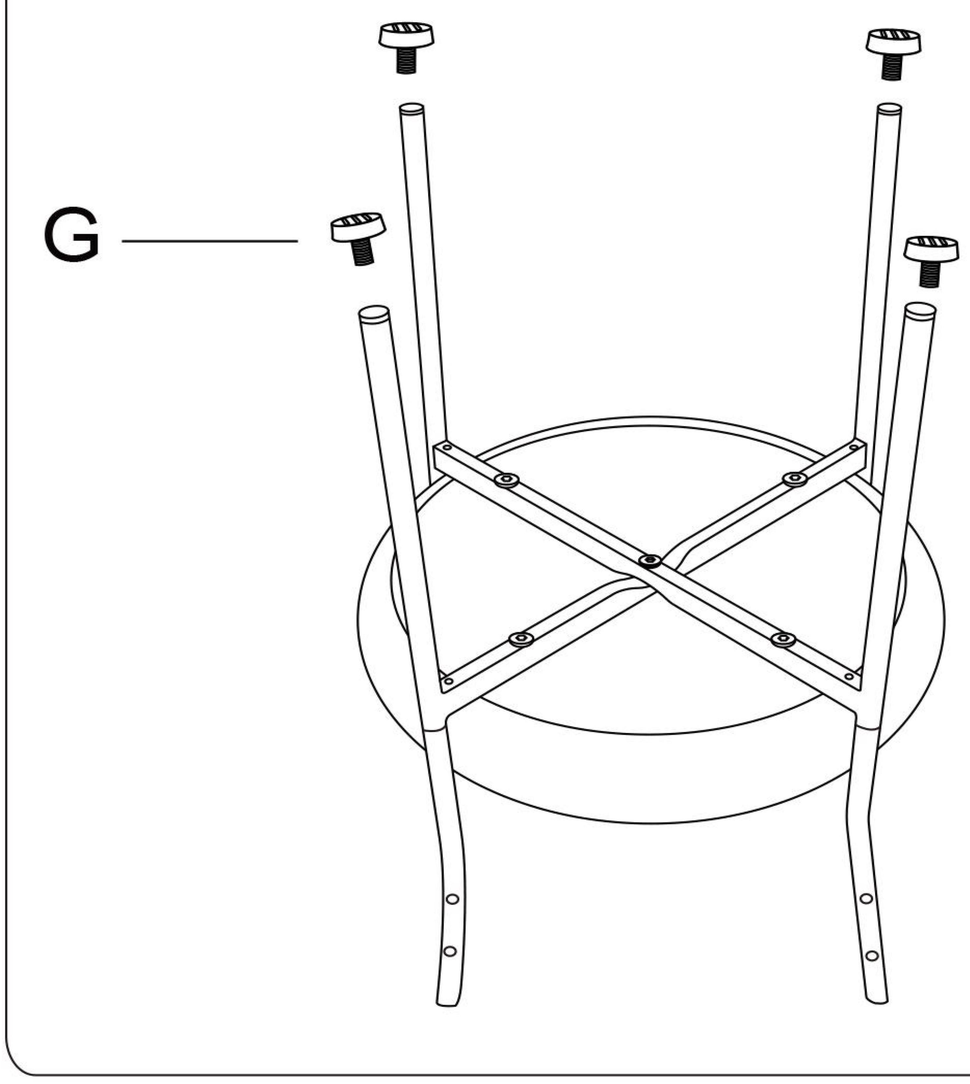


5

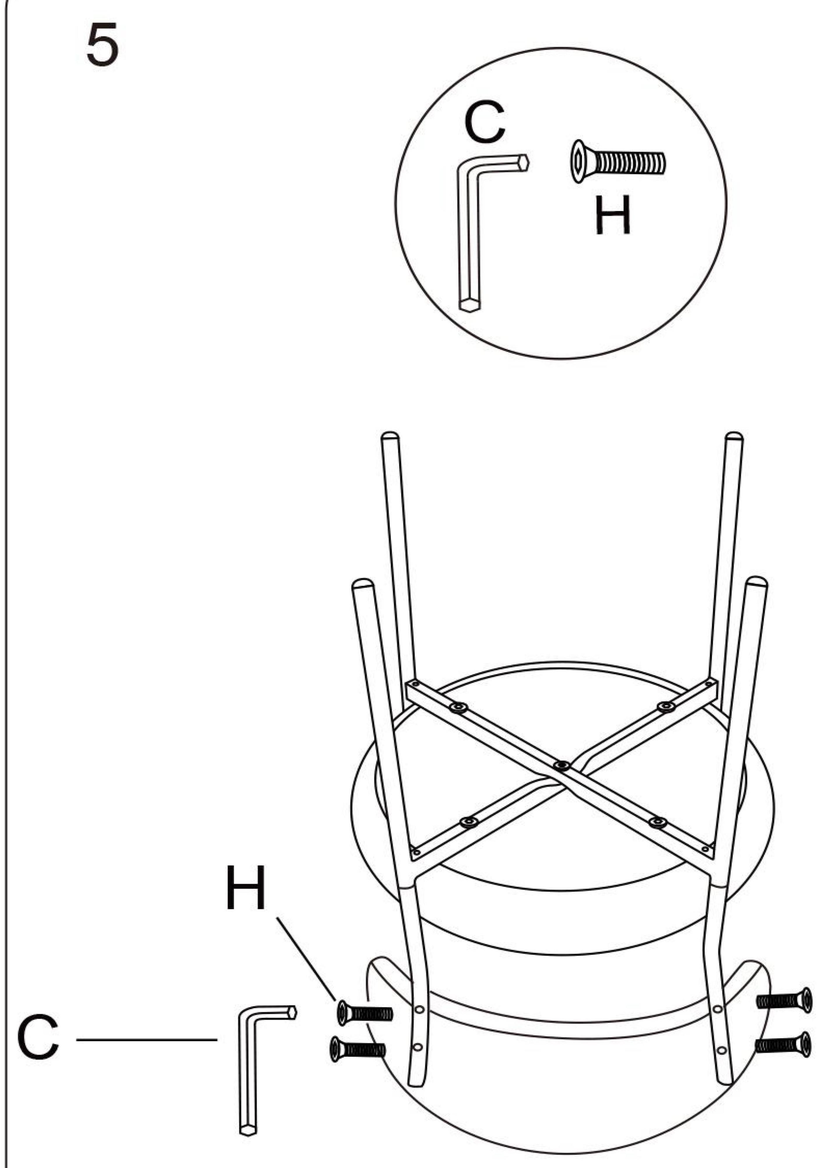


6

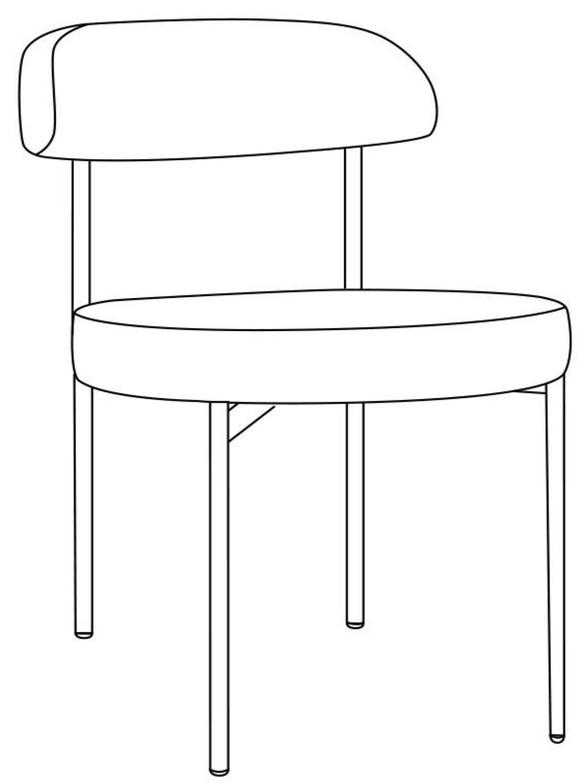

Thank you for purchasing this quality product.Be sure to check all packing material carefully for small part that may have come loose inside the carton during shipment.