ASSEMBLY INSTRUCTIONS

QUEEN FLOOR BED WITH FENCE

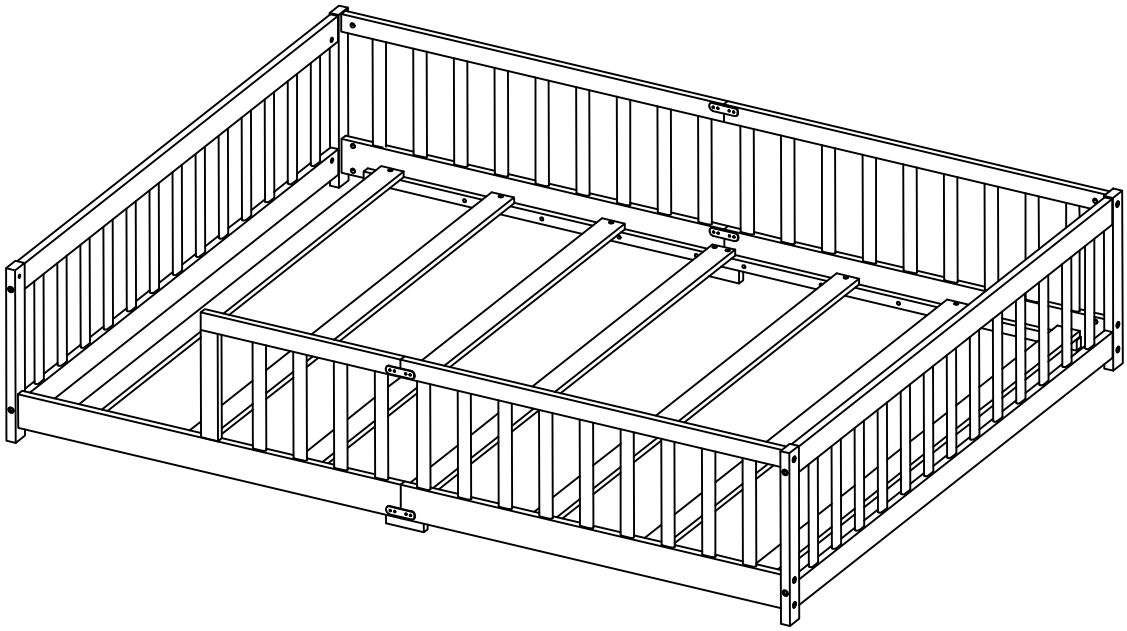

MK33063

Detail View

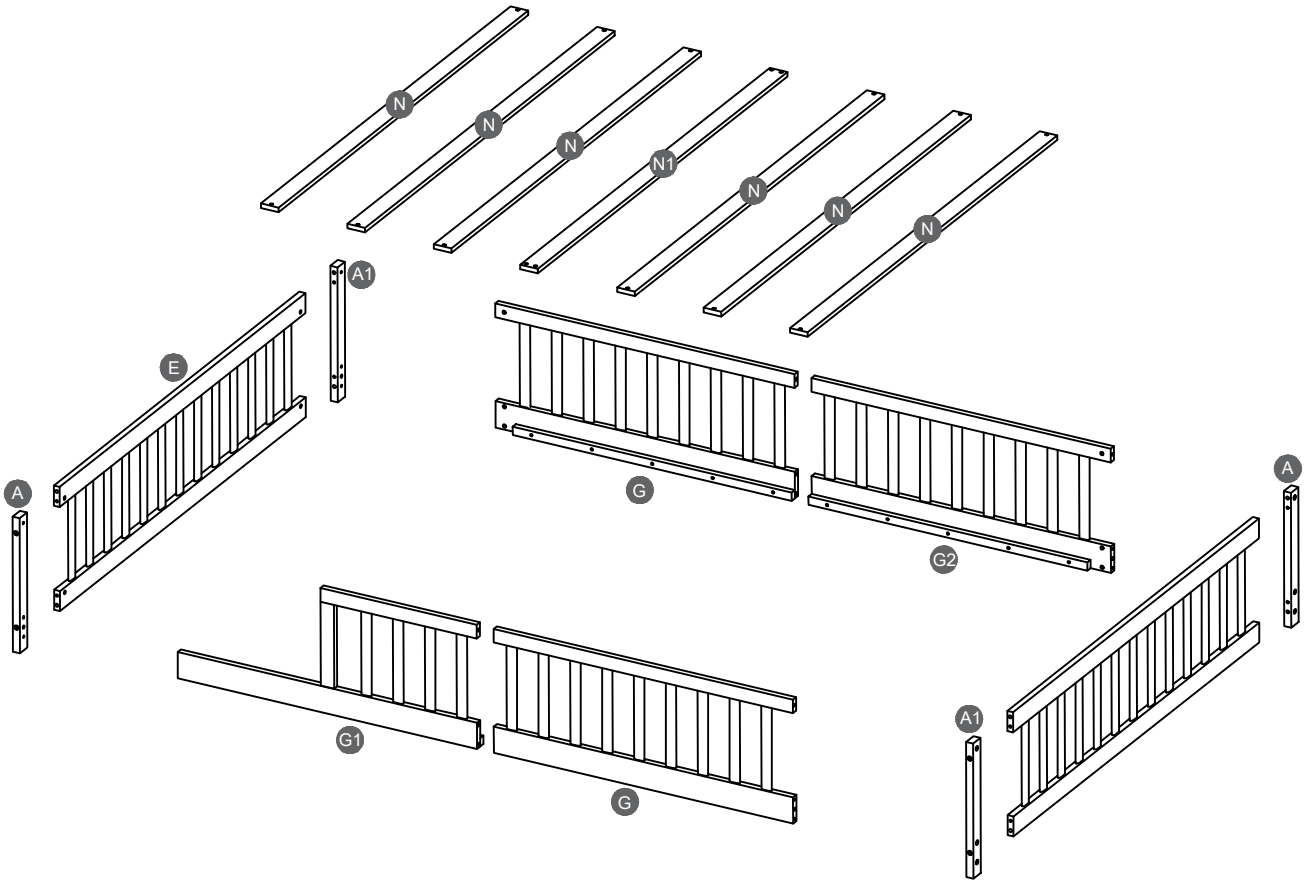

Part List

A 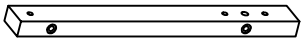 Leg - 2pcs	**A1** 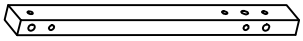 Leg - 2pcs
E 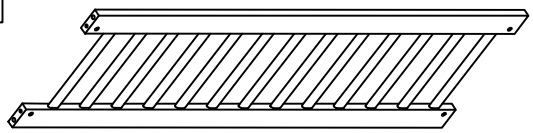 Hb. Fb. Panel - 2pcs	**G** 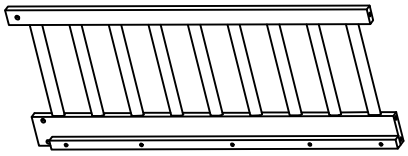 Side Rail - 2pcs
G1 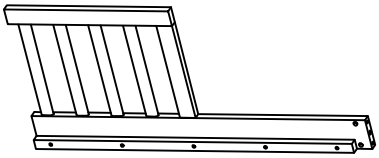 Side Rail - 1pc	**G2** 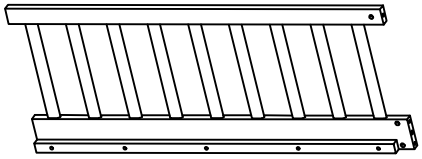 Side Rail - 1pc
N 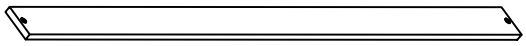 Bed Slats - 6pcs	**N1** 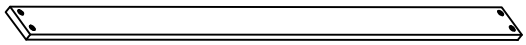 Bed Slats (Mid.) - 1pc

Hardware List

1 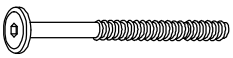 M6 x 80mm JCBC (8pcs)	**2** 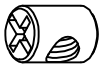 M6 x 15mm Barrel Nut (19pcs)	**3** 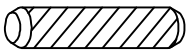 M10 x 40mm Wood Dowel (18pcs)
4 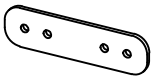 Metal Bracket (8pcs)	**5** 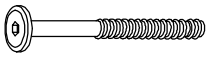 M6 x 65mm JCBC (11pcs)	**6** 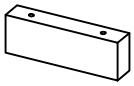 Side Rail Bottom Support (2pcs)
7  M4 x 32mm CSK Screw (4pcs)	**8**  M3.5 x 16mm CSK Screw (32pcs)	**9**  Sticker Cap (2pcs)
10 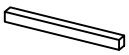 20 x 20 x 245mm Wood Block (1pc)	**11**  M4 x 25mm CSK Screw (16pcs)	**12**  M4 Allen Key (1pc)

ASSEMBLY TOOLS REQUIRED (NOT INCLUDED)

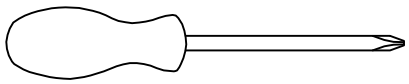



PLEASE BE CAREFUL DO NOT DAMAGE THE HOLE POSITION WHEN YOU USE POWER TOOLS !

STEP 1:

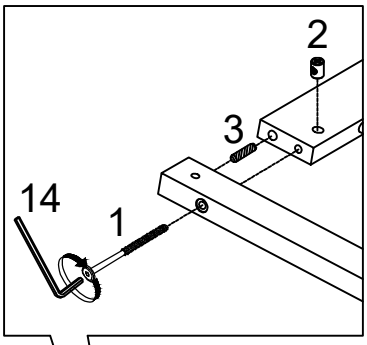

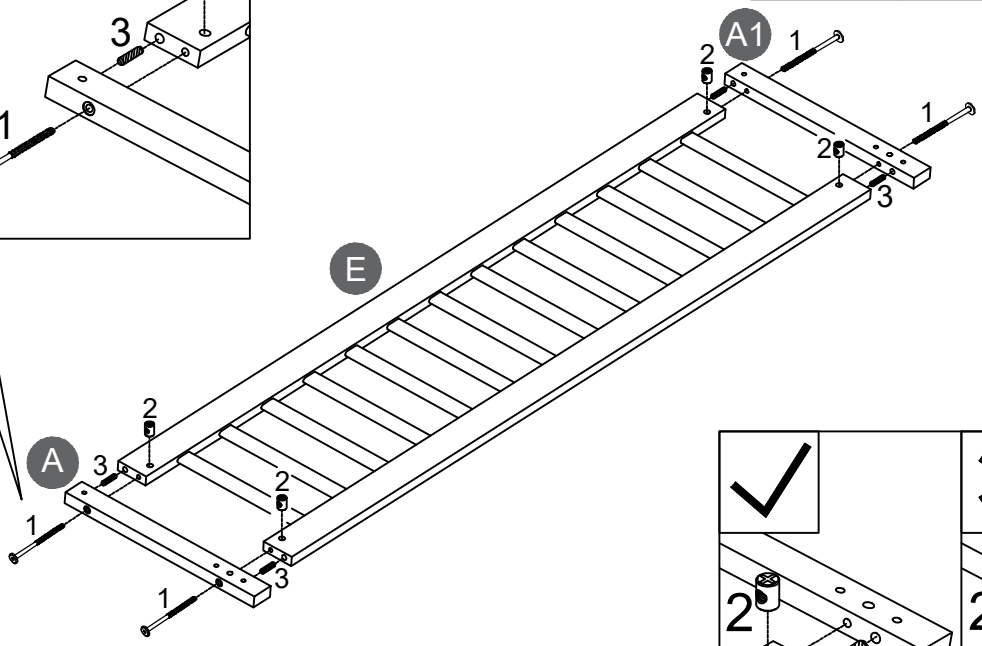

x 2

1	2	3
8PCS	8PCS	8PCS

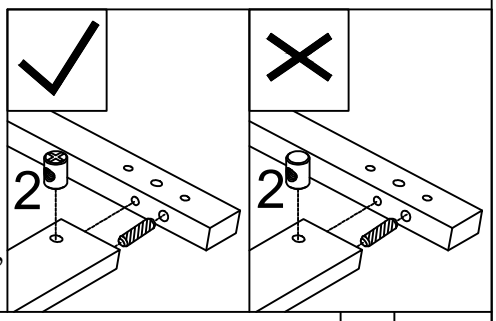

Note:Part2 will face up with the"+" mark on it, otherwise it cannot be tightened

STEP 2:

3
3PCS

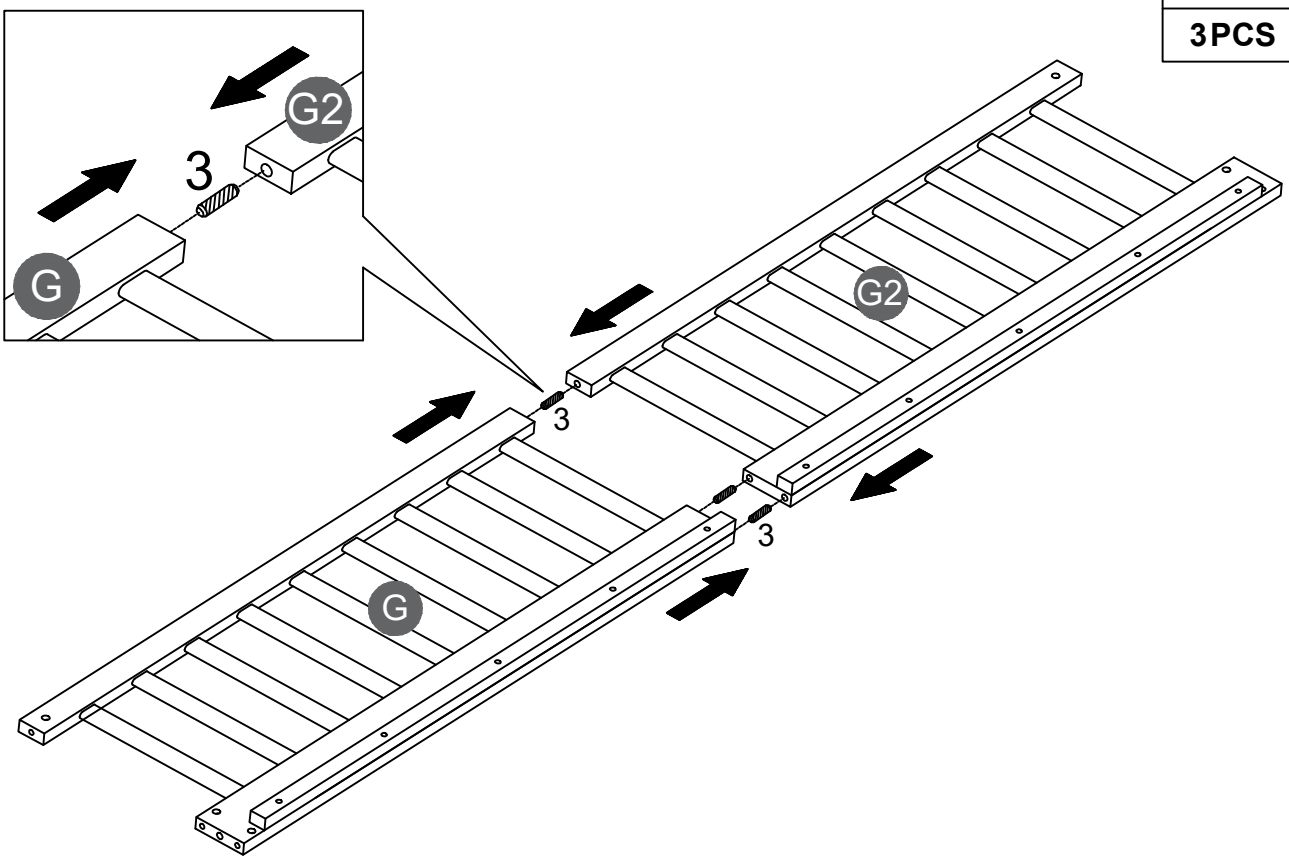

STEP 3:

4	8
2PCS	8PCS

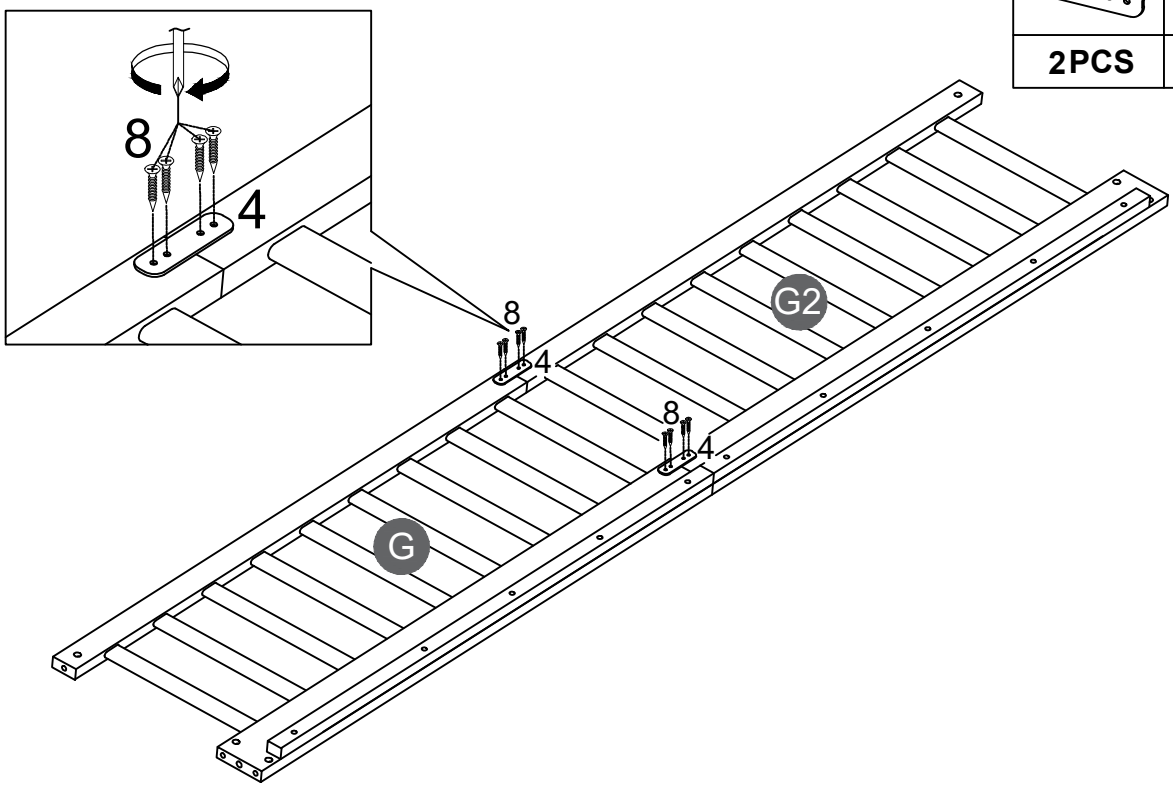

STEP 4:

4	8
2PCS	8PCS

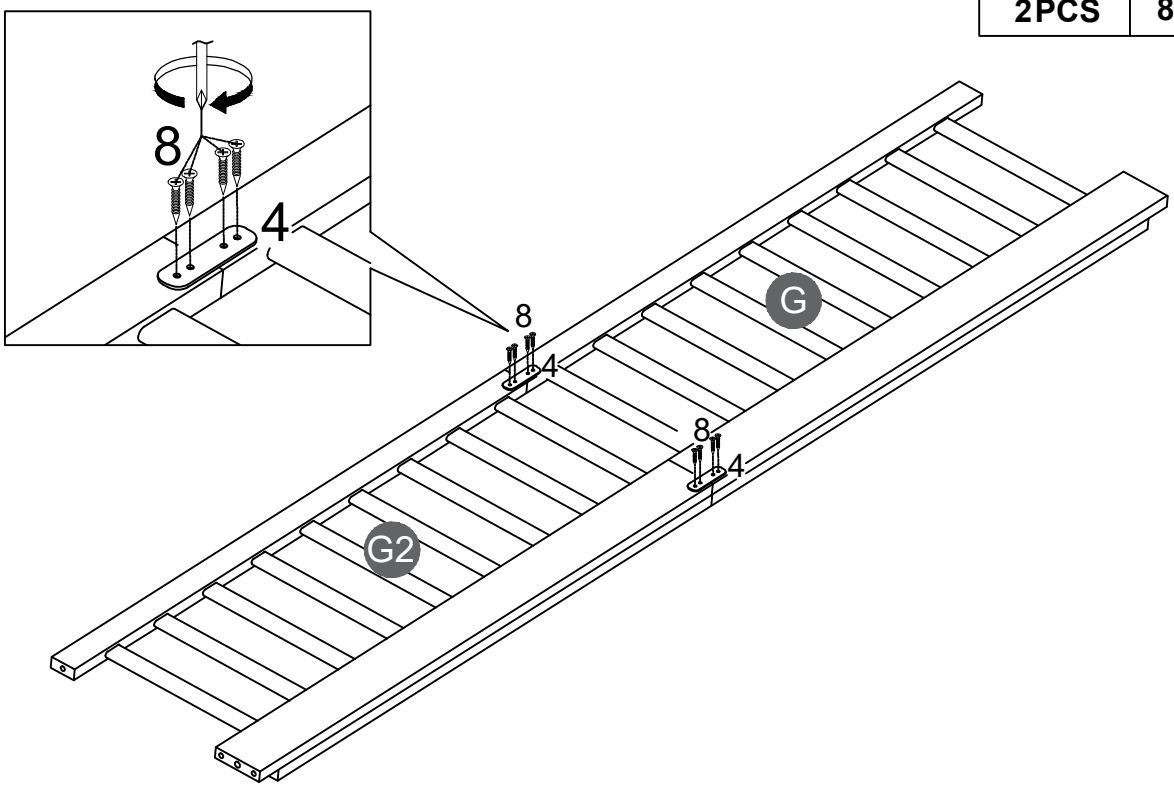

After completing the installation of Step 3, please flip to the other side.

STEP 5:

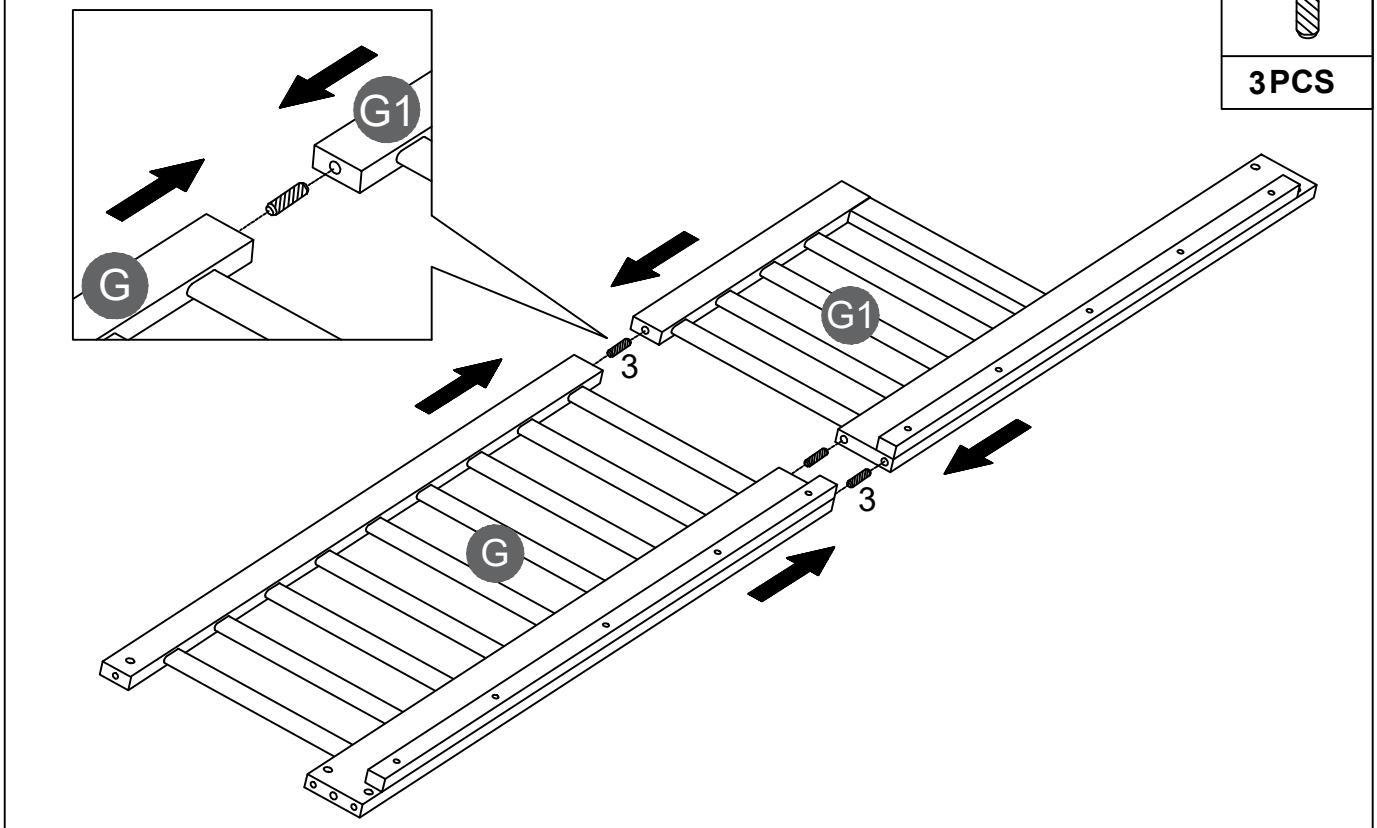

STEP 6:

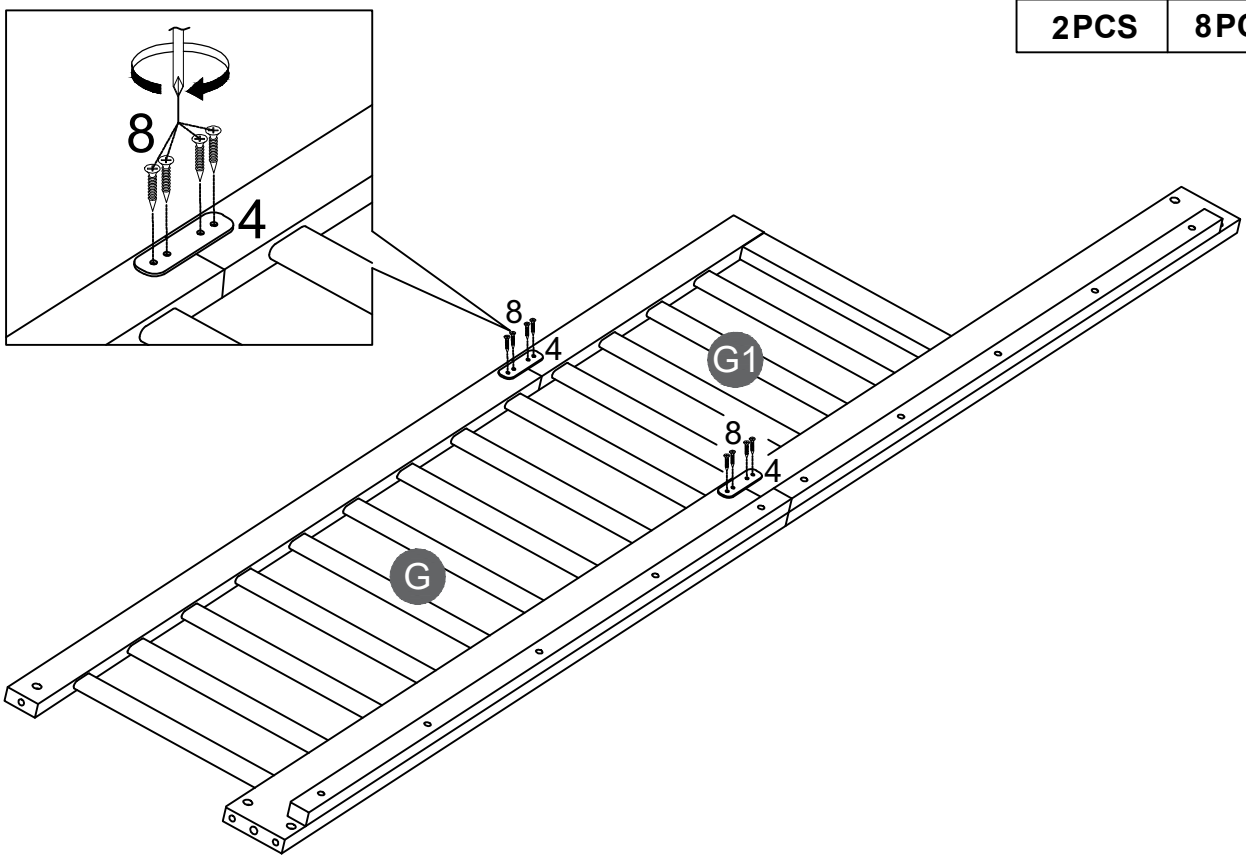

STEP 7:

4	8
2PCS	8PCS

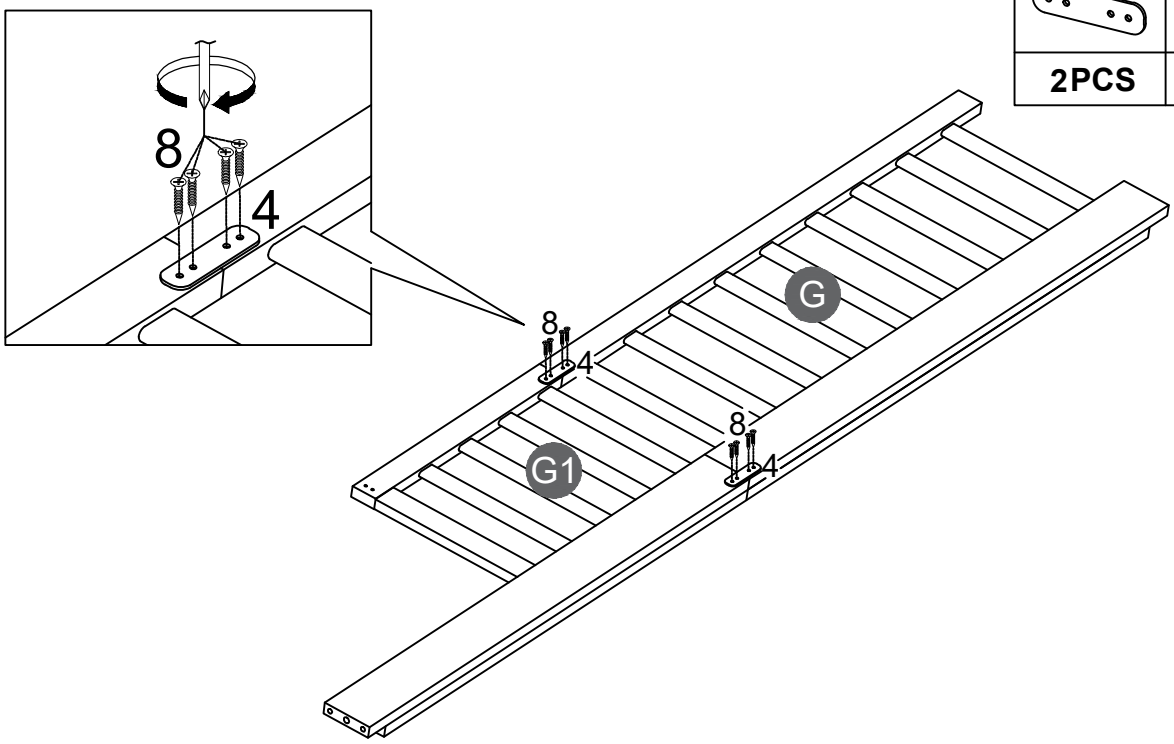

After completing the installation of Step 6, please flip to the other side.

STEP 8:

6	7
2PCS	4PCS

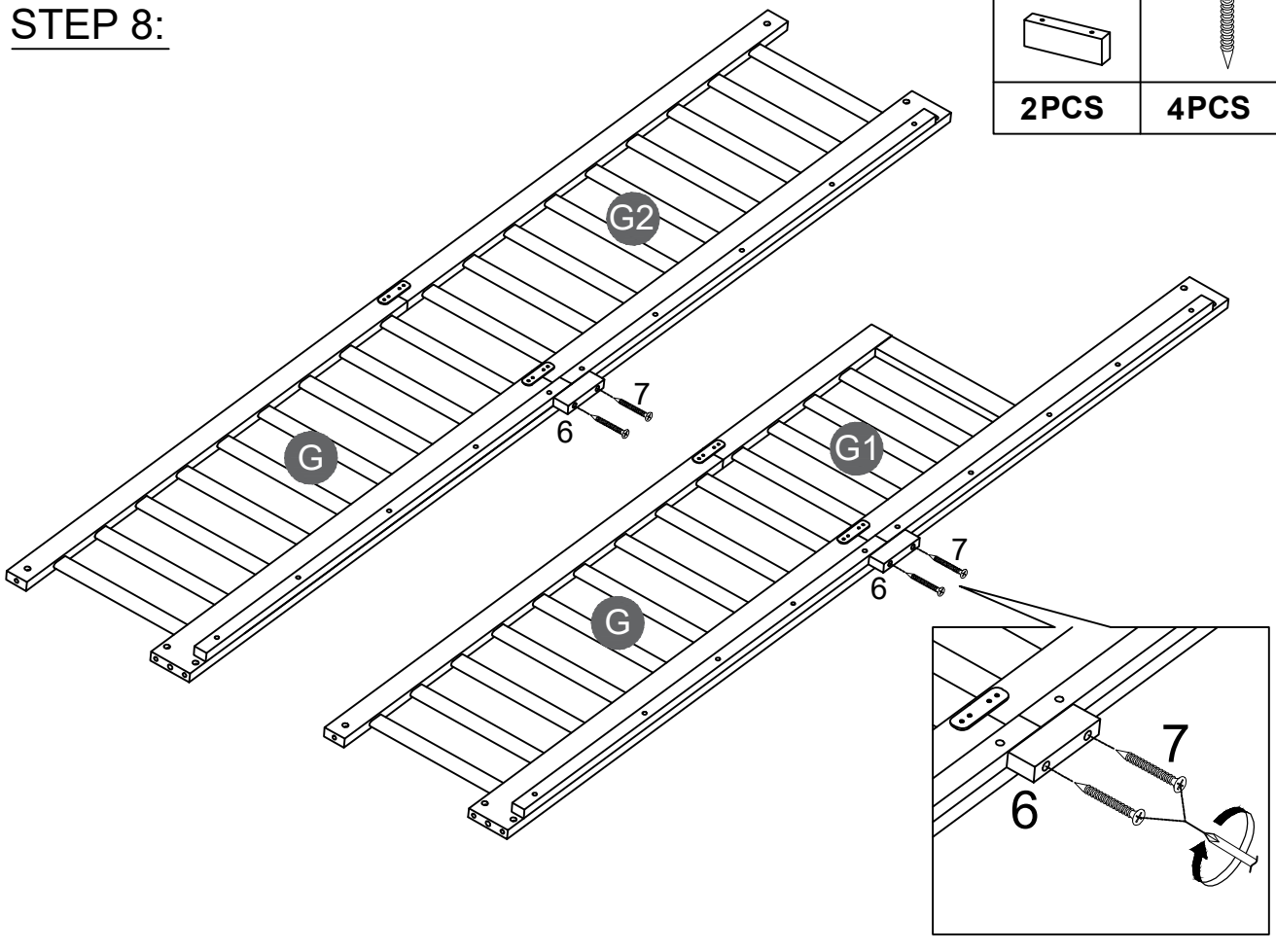

STEP 9:

2	3	5	9
11PCS	4PCS	11PCS	2PCS

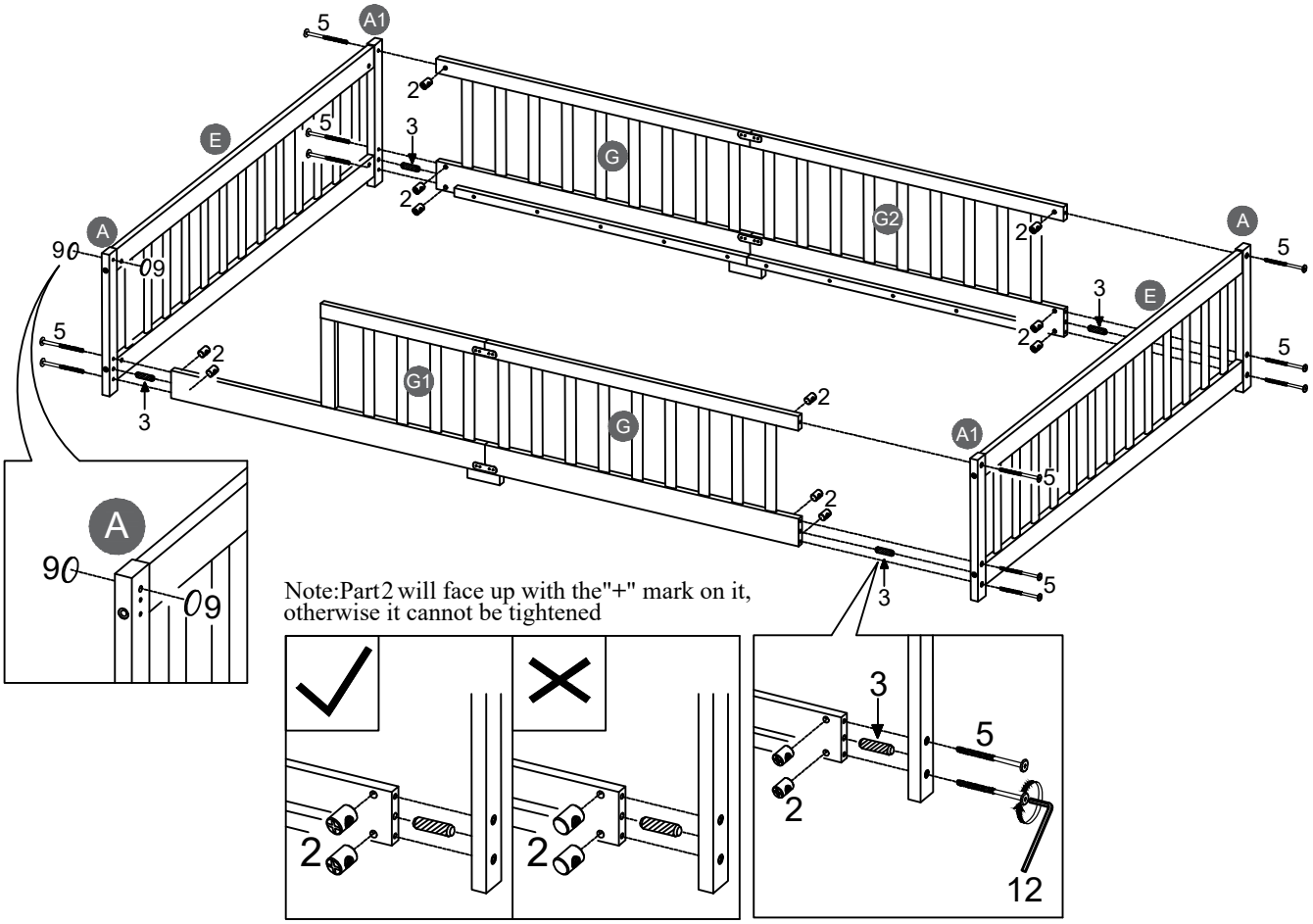

STEP 10:

10	11
1 PC	16PCS

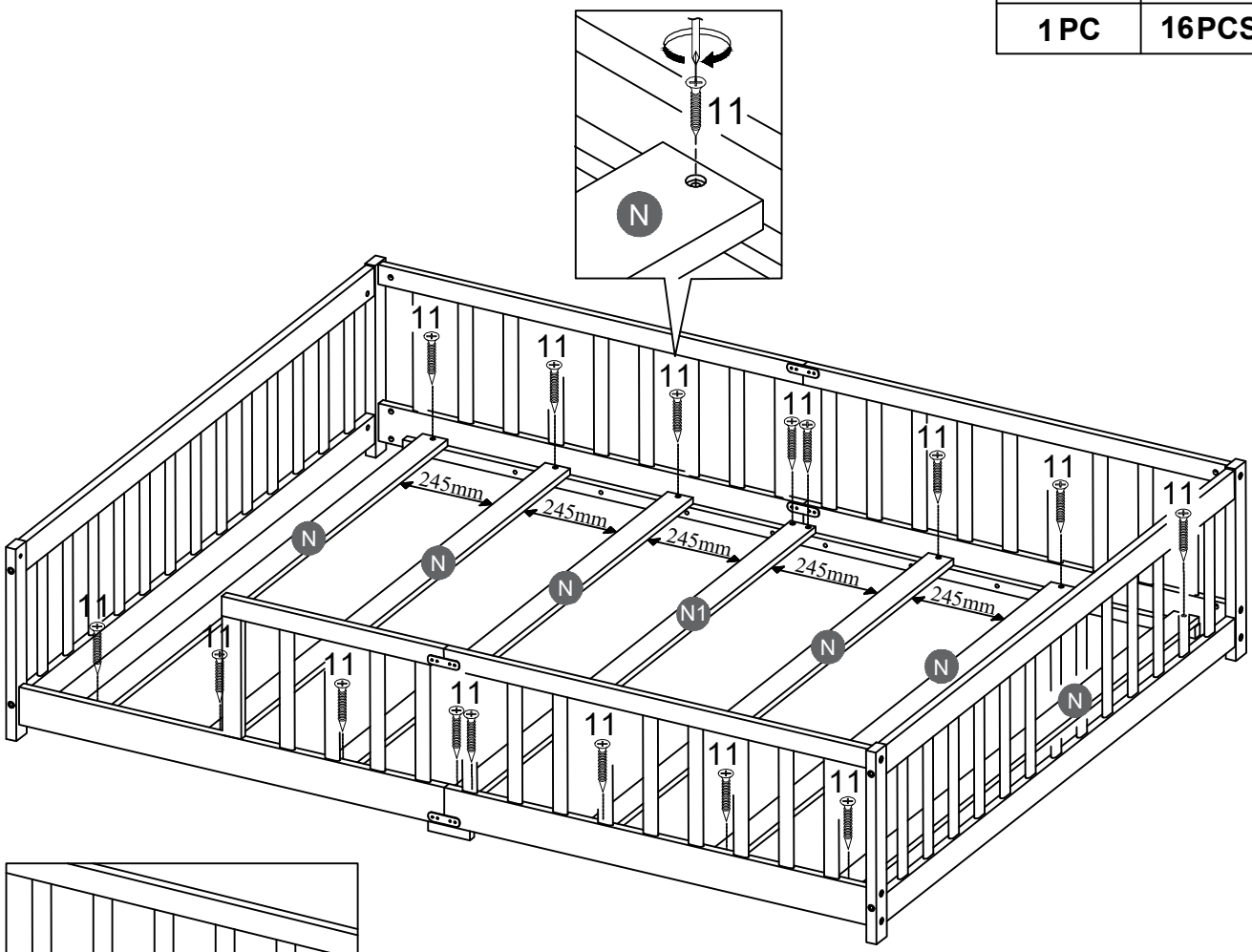

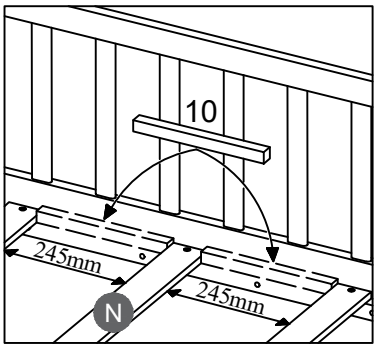

Note: Use Wood Block as a guidance distance between Bed Slats.

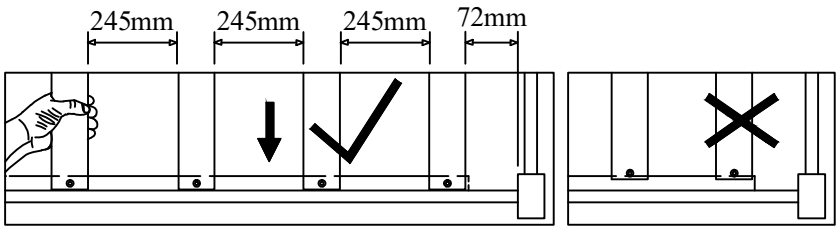

Note: Do not lock the screws of the bed slats to the outermost edge of the bed slats, you need to leave a certain space at the edges, otherwise it will cause the board to break. Do not lock the bed slats on the edge of the wood, please hold firmly before screwing , hold it in place with one hand, then lock the screw.