Assembly Instruction

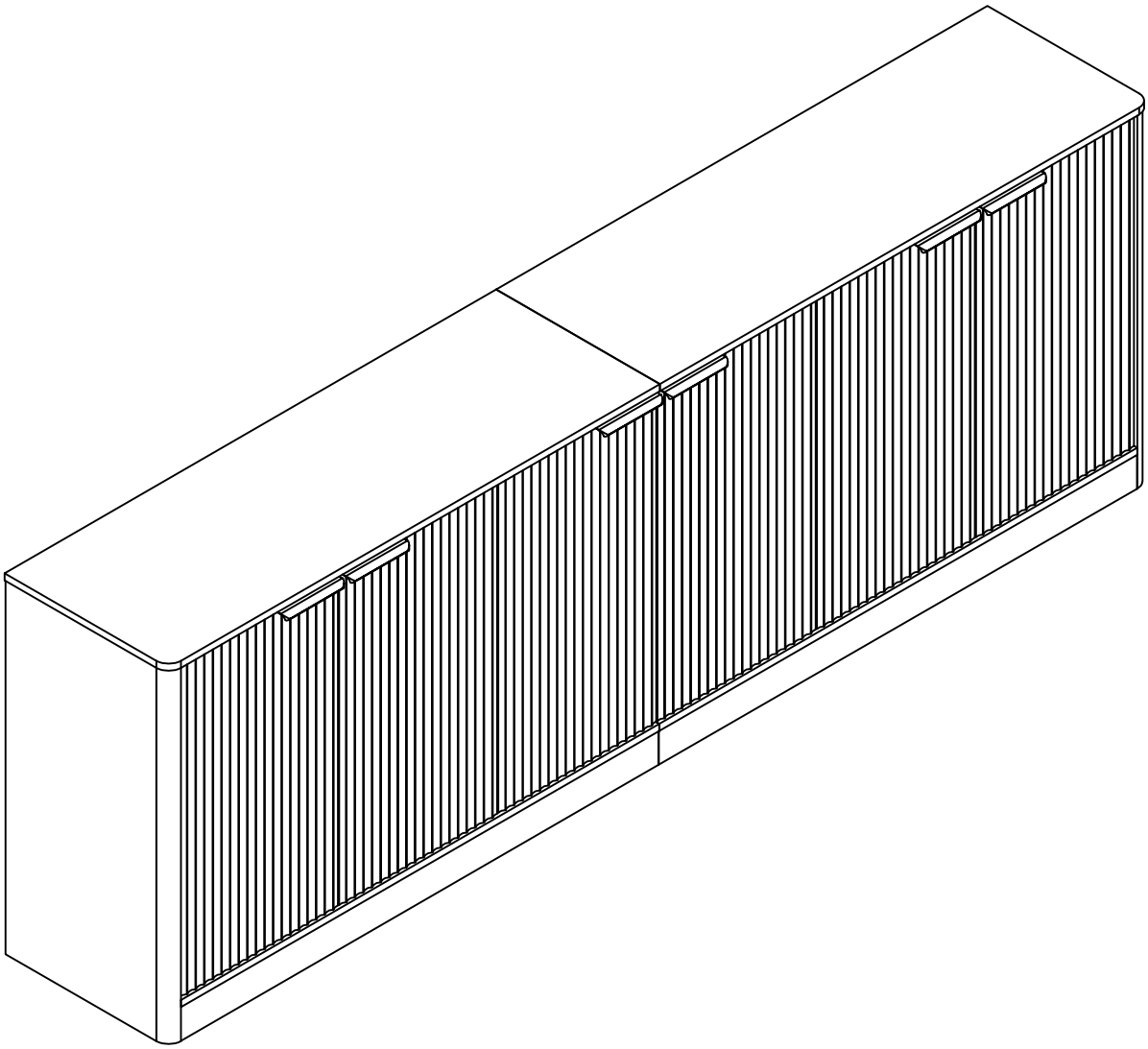

General Guidelines

- Please read the following instructions carefully and use the product accordingly.
- Please keep this manual and hand it over when you transfer the product.
- This summary may not include every detail of all variations and considered steps. Please contact us if further information or assistance is needed.

Notes

- The product is intended for indoor use only. It must be assembled and used in accordance with the provisions of the manual. Personal injury and/or damage to the product may occur if the product is used outside of its intended purpose and/or if it has been changed/modified from its original design. The seller does not assume any responsibility or liability for injury or damage caused by incorrect assembly or improper use.
- Avoid long-term exposure to humid environments to prevent mildew.
- Keep the product away from fire sources and high temperatures. Do not expose the product to direct sunlight.
- Do not place any hot objects on the surface of the product.
- If there are any defective or missing parts after unpacking, please cease assembly immediately and contact us.
- Assemble the item on a spacious surface and avoid placing the unwrapped product directly on the ground to prevent damage.
- Do not stand or sit on the wooden boards.
- Wear gloves during the assembly and/or disassembly process to avoid scratches from any sharp edges.
- Match each part and fitting based on the part number in the manual.
- If a part does not match the fitting, please check the manual for clarification.
- During assembly, first loosenly align all screws with the corresponding pre-drilled holes, then tighten them one by one.
- Periodically inspect the screw tightness while the product is in use. Retighten if necessary to ensure structural integrity.
- If you accidentally spill water or any other liquid on the surface, immediately wipe it clean with a dry towel.
- Keep the product away from sharp, pointed objects and corrosive substances to prevent damage.
- Place the item on level, solid ground during use.

Warnings

- During assembly, keep all small parts out of the reach of children, as they may be fatal if swallowed or inhaled.
- Children should not climb or play on the product to avoid tipping over and causing serious injury.
- To avoid the potential danger of suffocation, keep all packaging materials (film, plastic bags, foam, etc.) away from babies and children.

Exploded(EN)

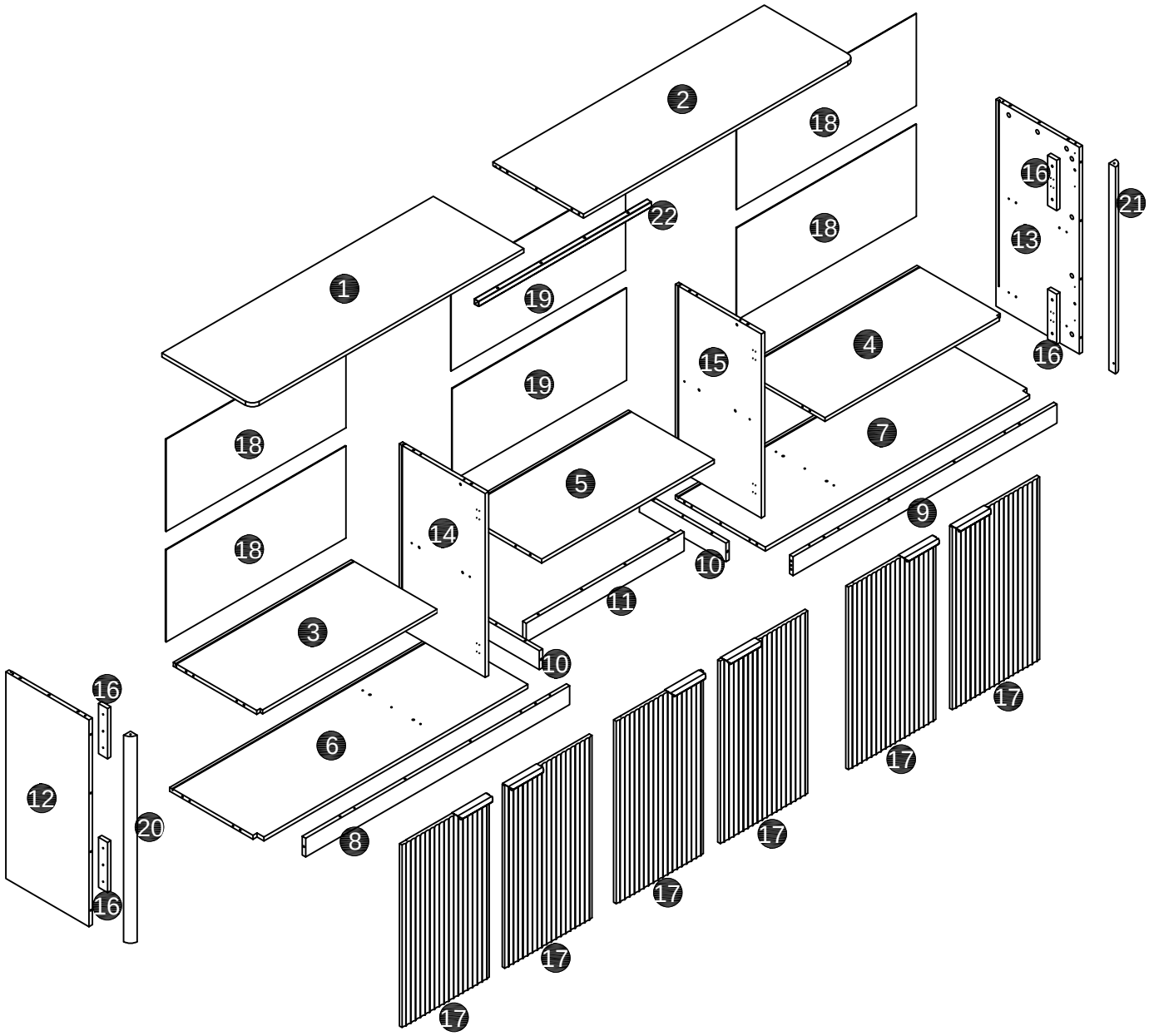

2
18
16
21
22
18
13
1
19
4
15
16
19
7
18
5
9
14
18
10
11
3
10
16
17
6
17
12
20
8
17
17
16
17
17

Parts List(EN)

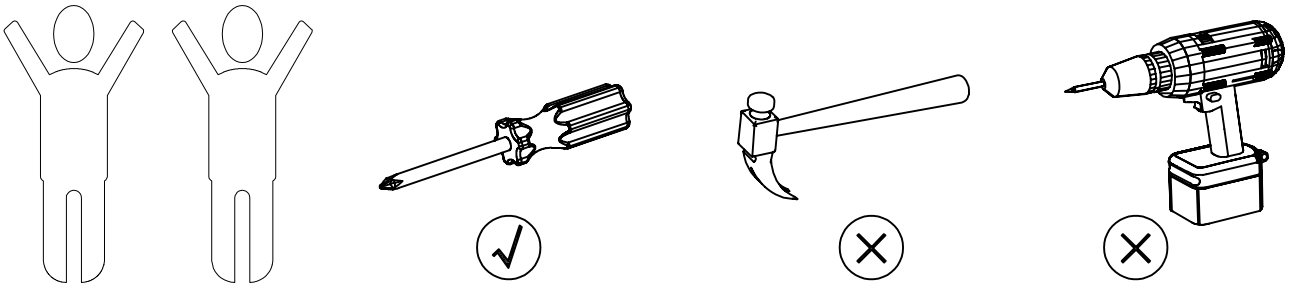

1 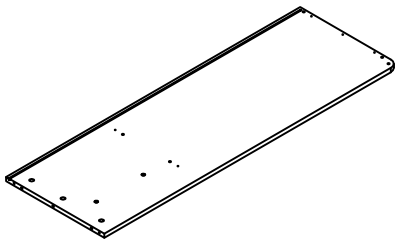 x1	2 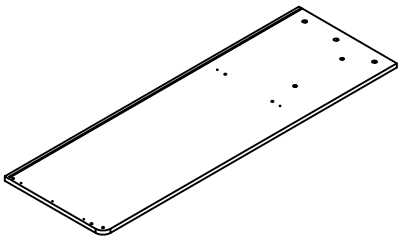 x1	3 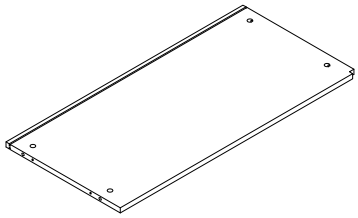 x1
4 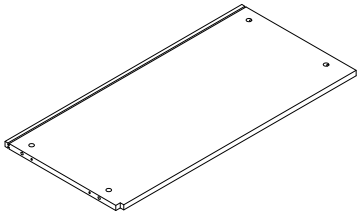 x1	5 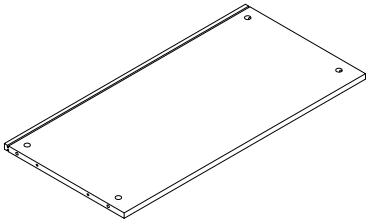 x1	6 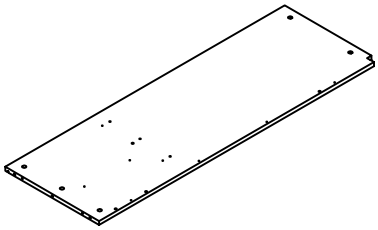 x1
7 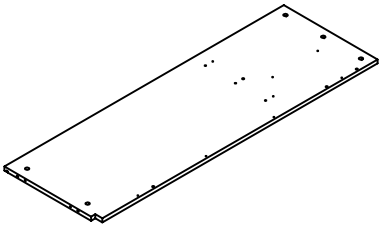 x1	8 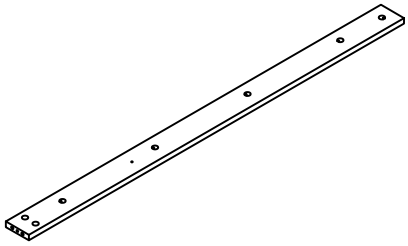 x1	9 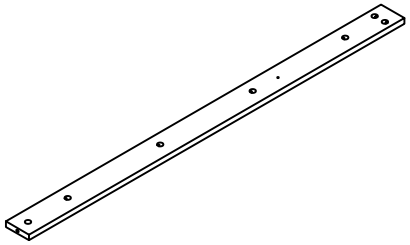 x1
10 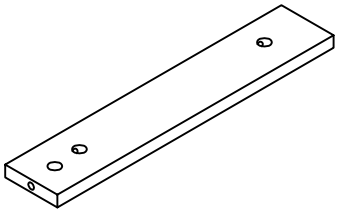 x2	11 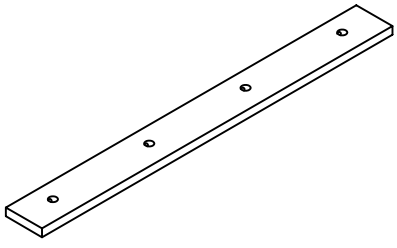 x1	12 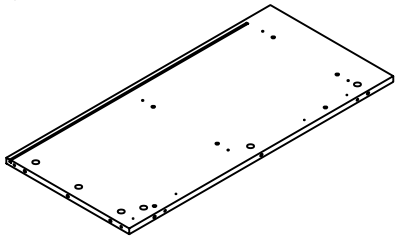 x1

Parts List(EN)

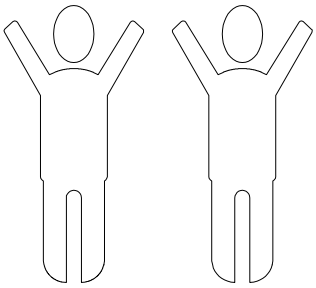

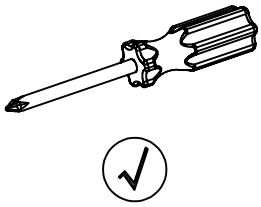

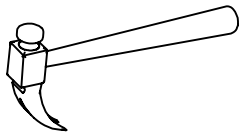

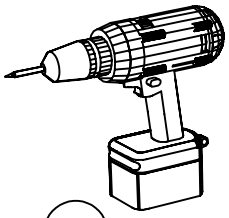

13 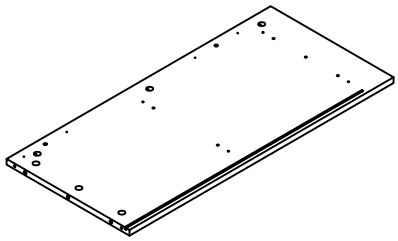 x1	14 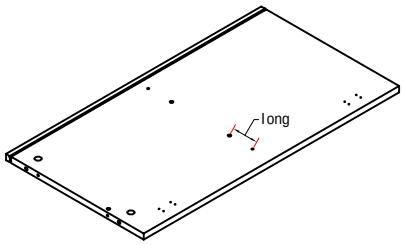 x1	15 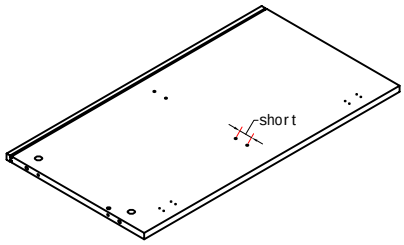 x1
16 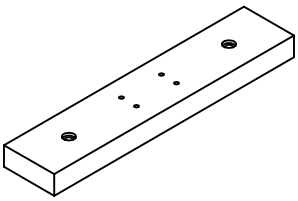 x4	17 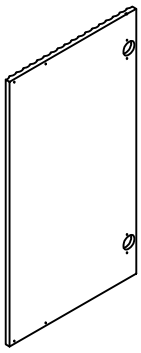 x6	18 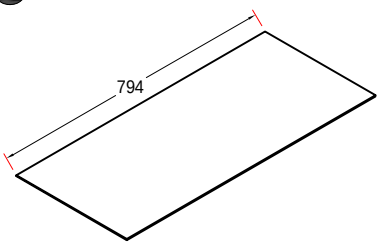 x4
19 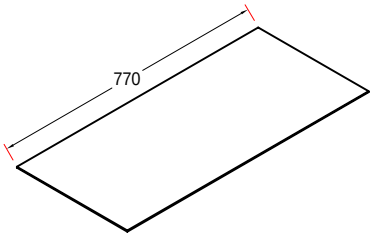 x2	20  x1	21  x1
22  x1		

Hardware List(EN)

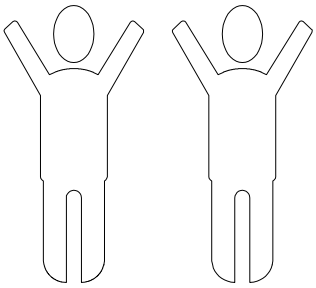
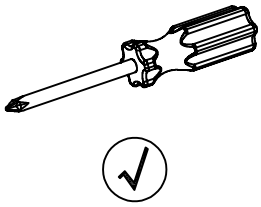
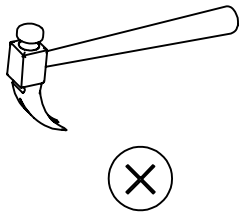
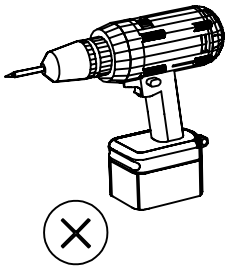

A 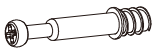 6*40mm 52+3PCS	B  15*9.5mm 68+3PCS	C  6*30mm 51+3PCS	D  8*20mm 4+1PC
E  ST5*45mm 6+1PC	F  M3.5*12mm 84+3PCS	G  M3.5*25mm 8+1PC	H 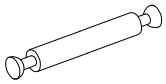 ϕ5*80mm 8+1PC
I 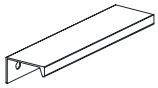 6PCS	J 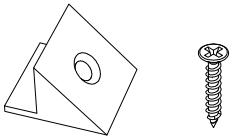 36+2PCS	K  ϕ21mm 68PCS	L 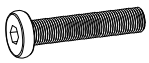 M6*28mm 6+1PC
M 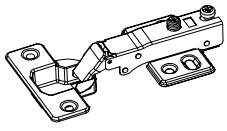 8PCS	N 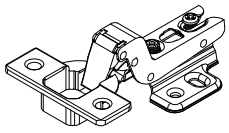 4PCS	O 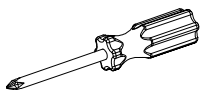 1PC	P  3mm 1PC
Q 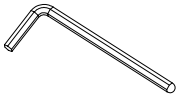 4mm 1PC	R 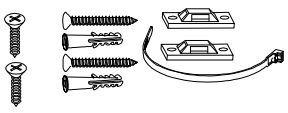 2PCS	T 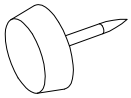 8+1PC	

Instructions For Fastening
CAM-BOLT and CAM-LOCK



CAM-BOLT



CAM-LOCK

Tools Required

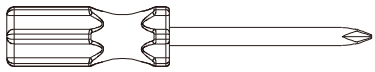



INSERTING AND TIGHTENING CAM-BOLT

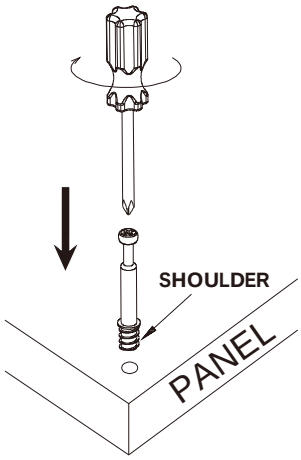

Place Cam-bolt on pre-drilled hole and screw in vertically

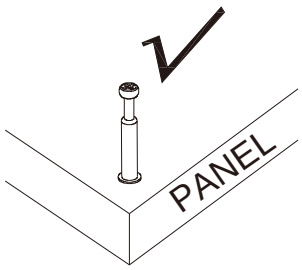

Shoulder is flushed (on the same level) with the panel

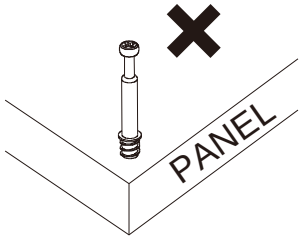

Shoulder is above the panel

Place Cam-bolt on the designated pre-drilled holes on the panel. Use a Phillips Screwdriver to screw-in Cam-bolt vertically until shoulder is flushed (on the same level) with panel.

INSERTING CAM-LOCK

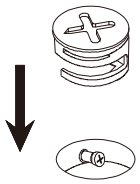

Insert Cam-lock with arrow align to Cam-bolt head

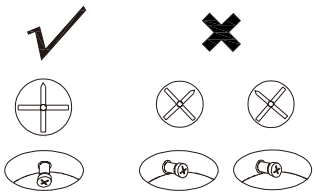

CORRECT **WRONG**

Align the arrow on the Cam-lock to the Cam-bolt head and insert the Cam-lock. Ensure Cam-lock is fully inserted.

TIGHTENING CAM-LOCK

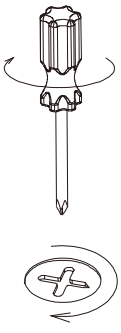

Use a Flat-head Screwdriver to turn Cam-lock clockwise so it locks onto the head of the Cam-bolt. Turn until it is snug (about 3/4ths of a turn) -- over-tightening could damage Cam-lock or/and Cam-bolt.

Assembly Steps(EN)

STEP 1

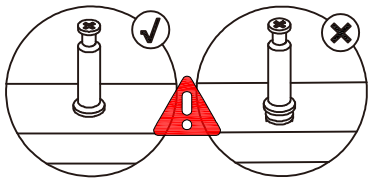

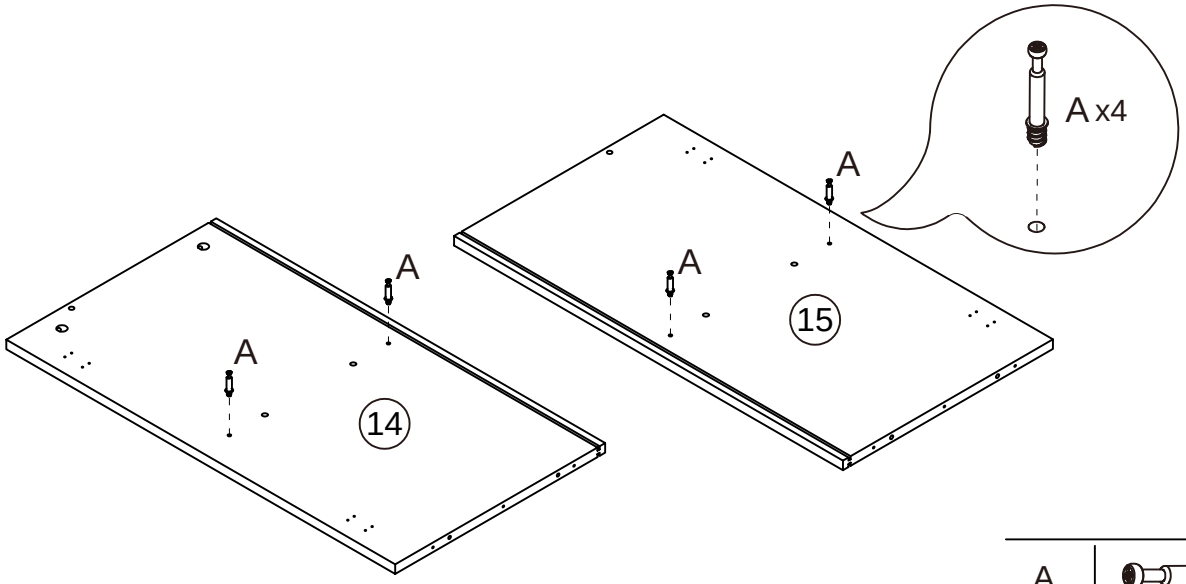

A	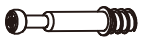	x4
O	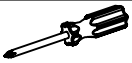	x1

STEP 2

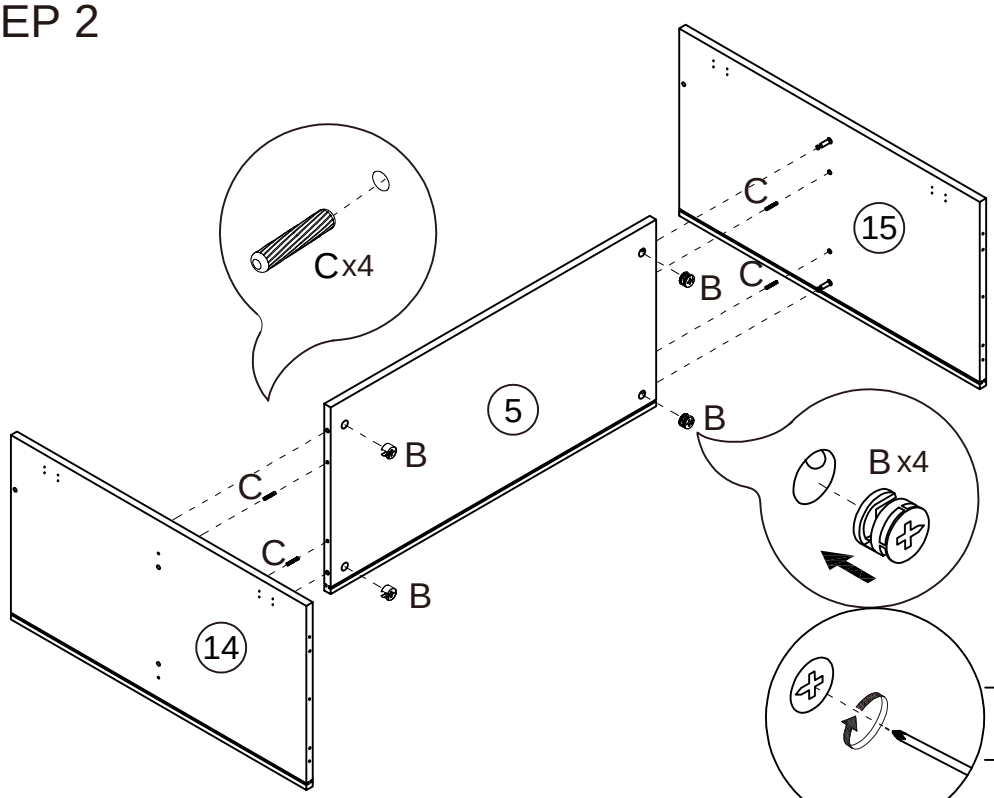

B		x4
C		x4
O		x1

Assembly Steps(EN)

STEP 3

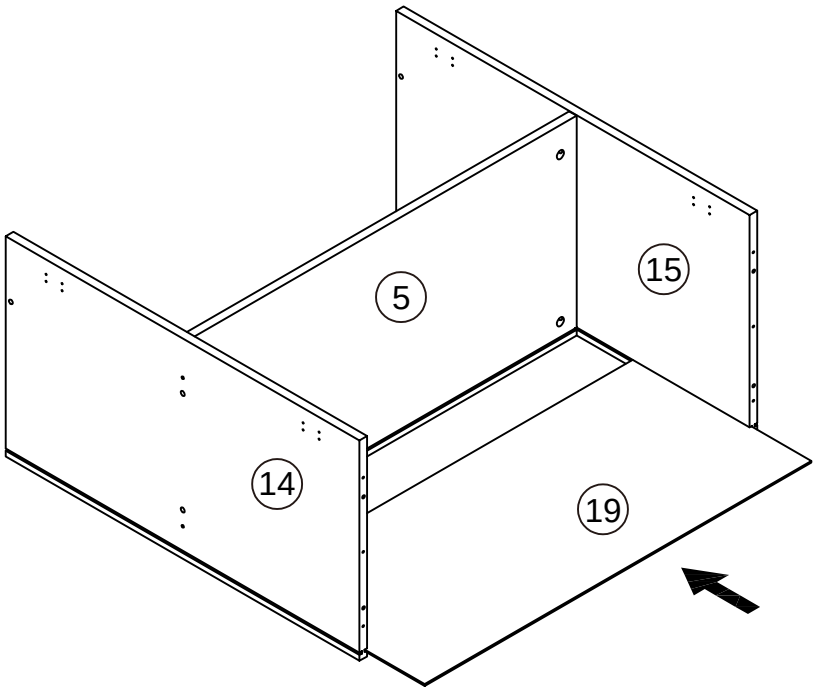

STEP 4

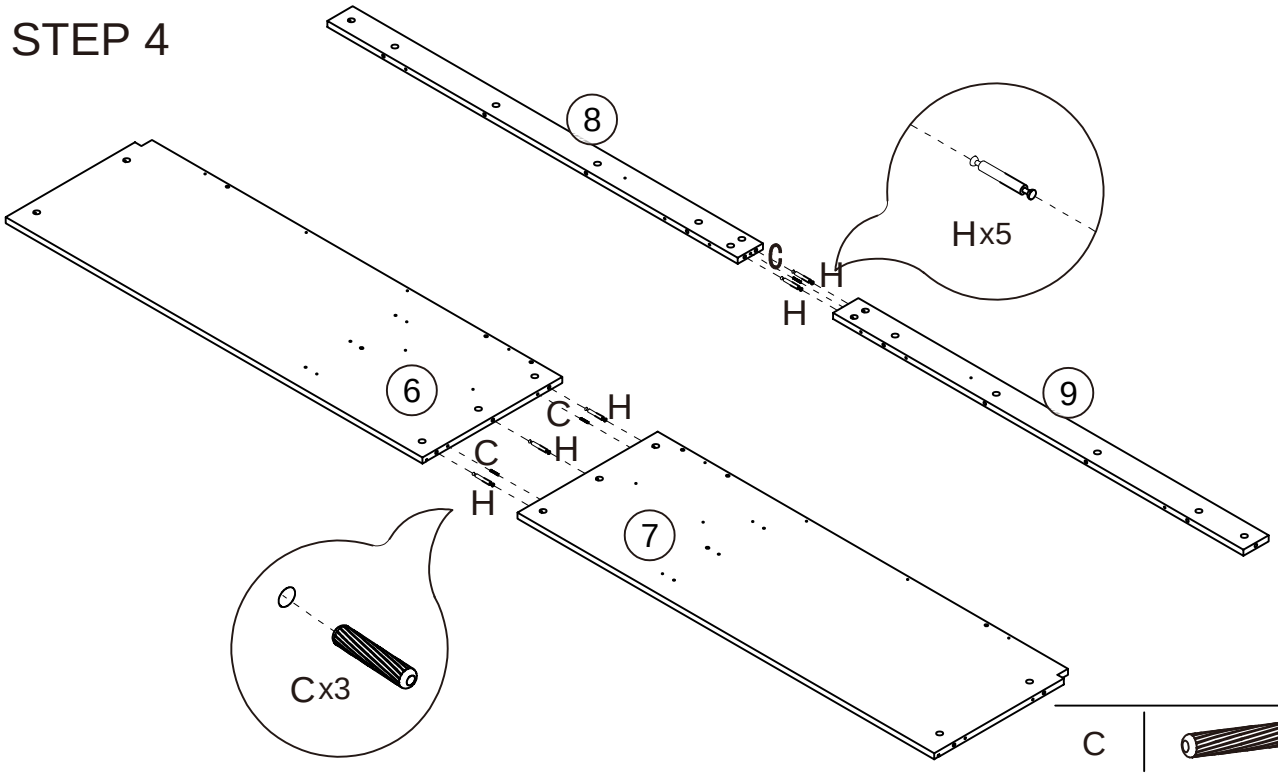

C		x3
H		x5
O		x1

Assembly Steps(EN)

STEP 5

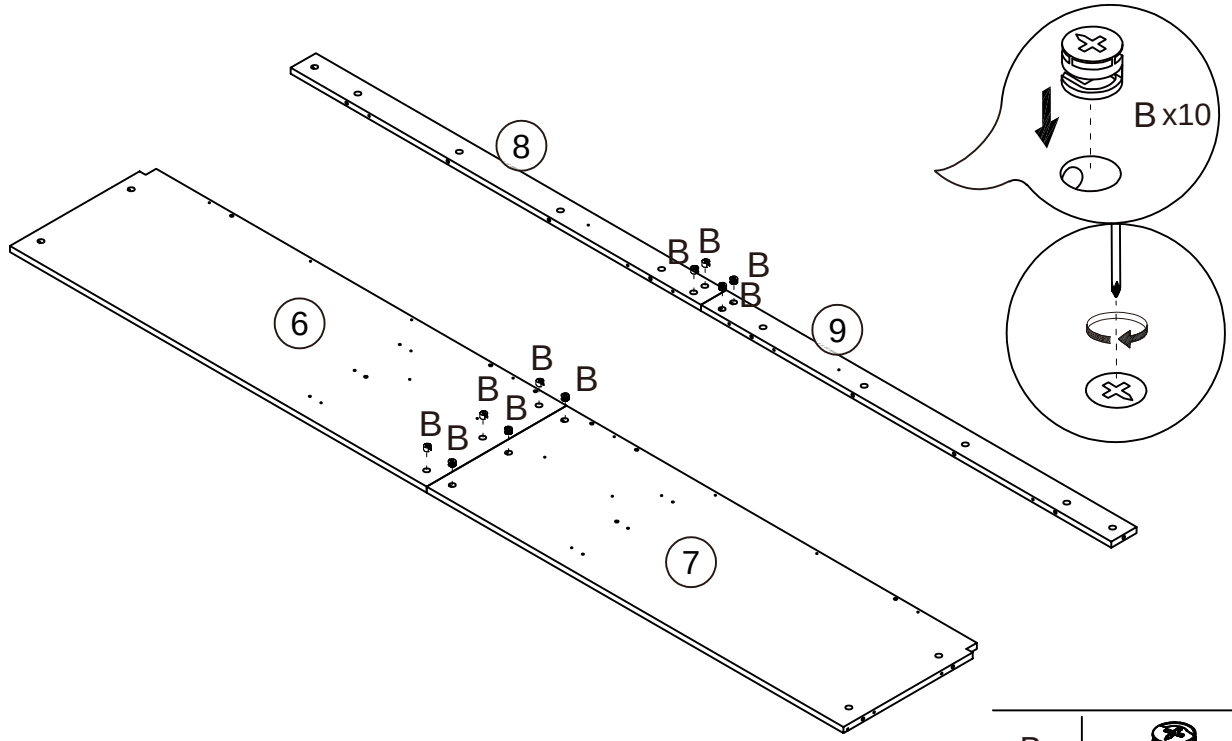

B		x10
O		x1

STEP 6

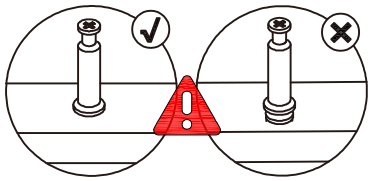

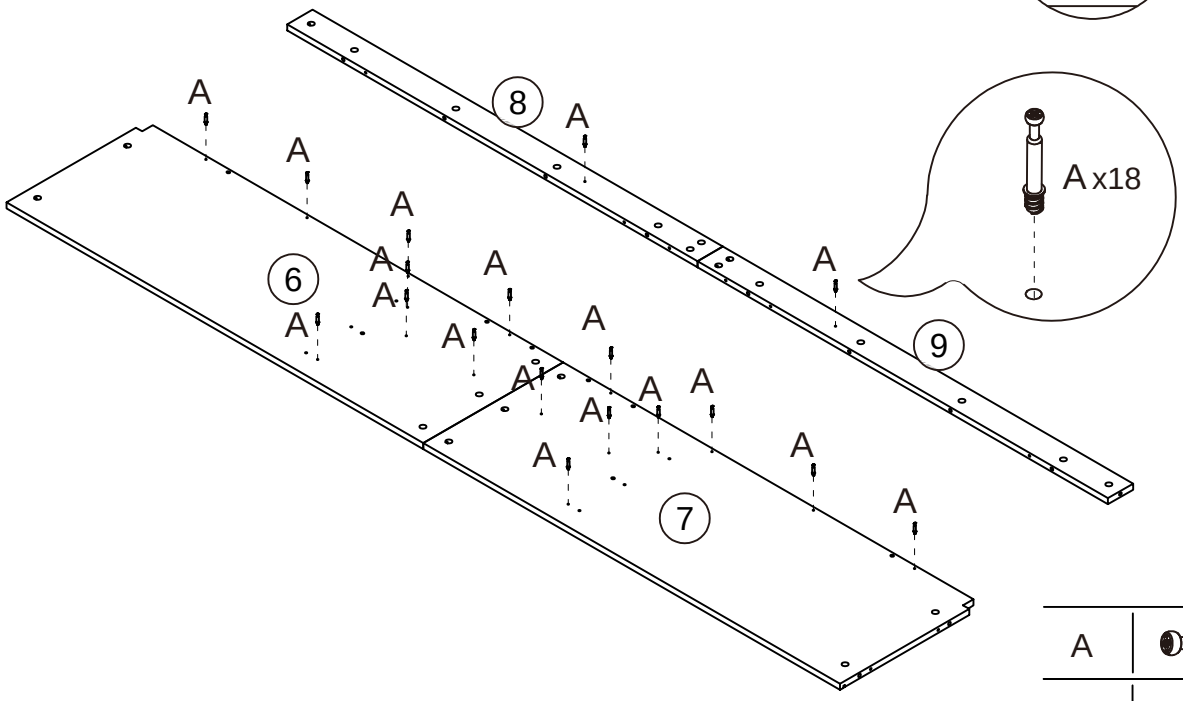

A		x18
O		x1

Assembly Steps(EN)

STEP 7

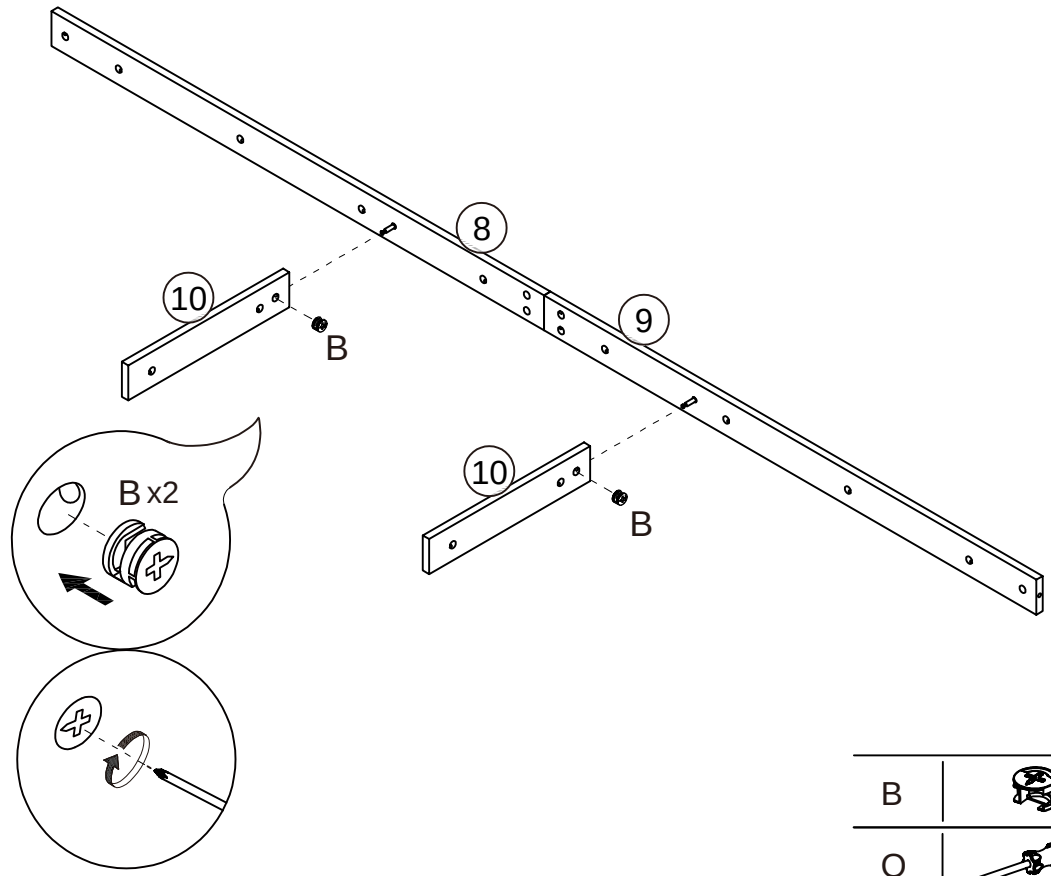

B		x2
O		x1

STEP 8

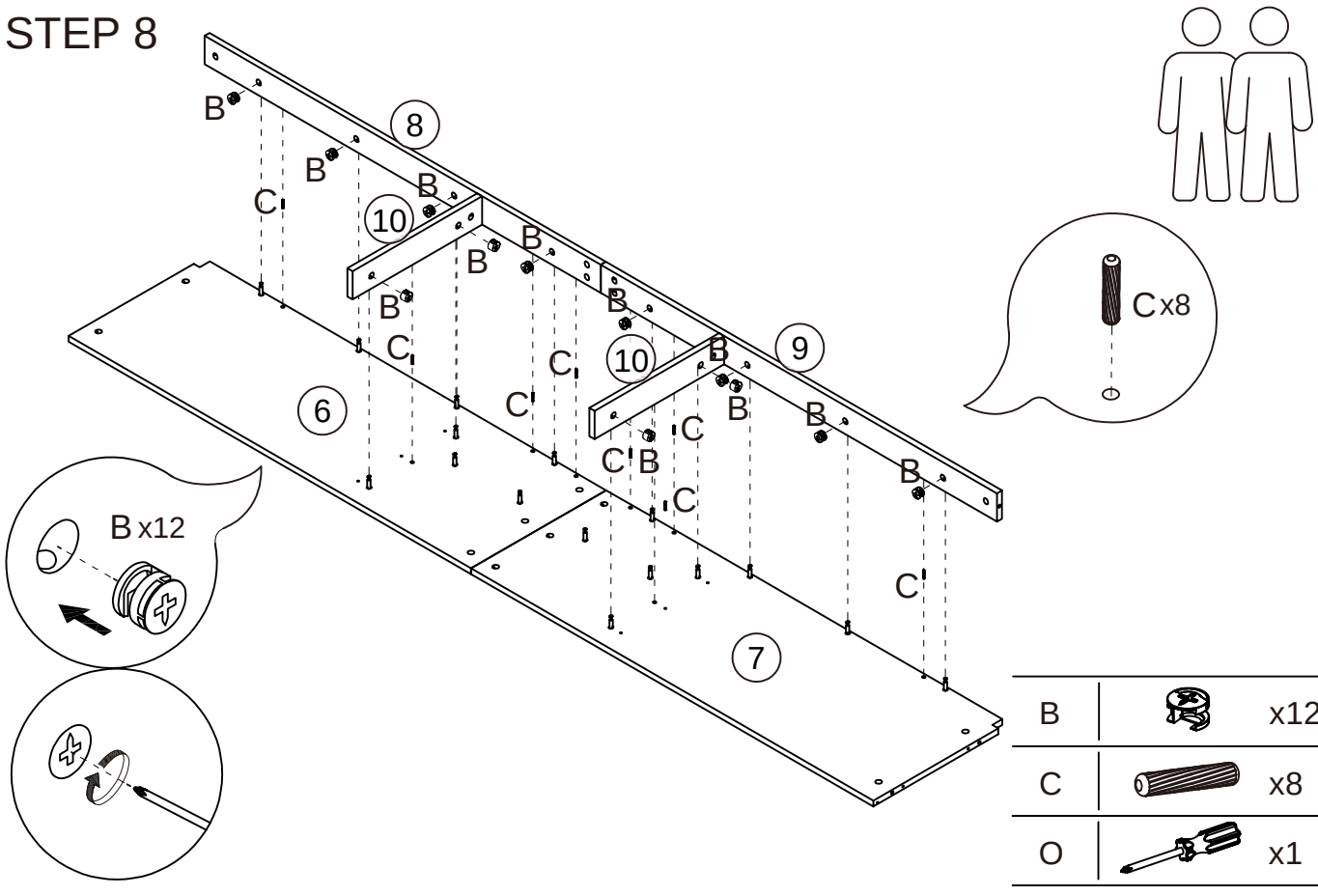

B		x12
C		x8
O		x1

Assembly Steps(EN)

STEP 9

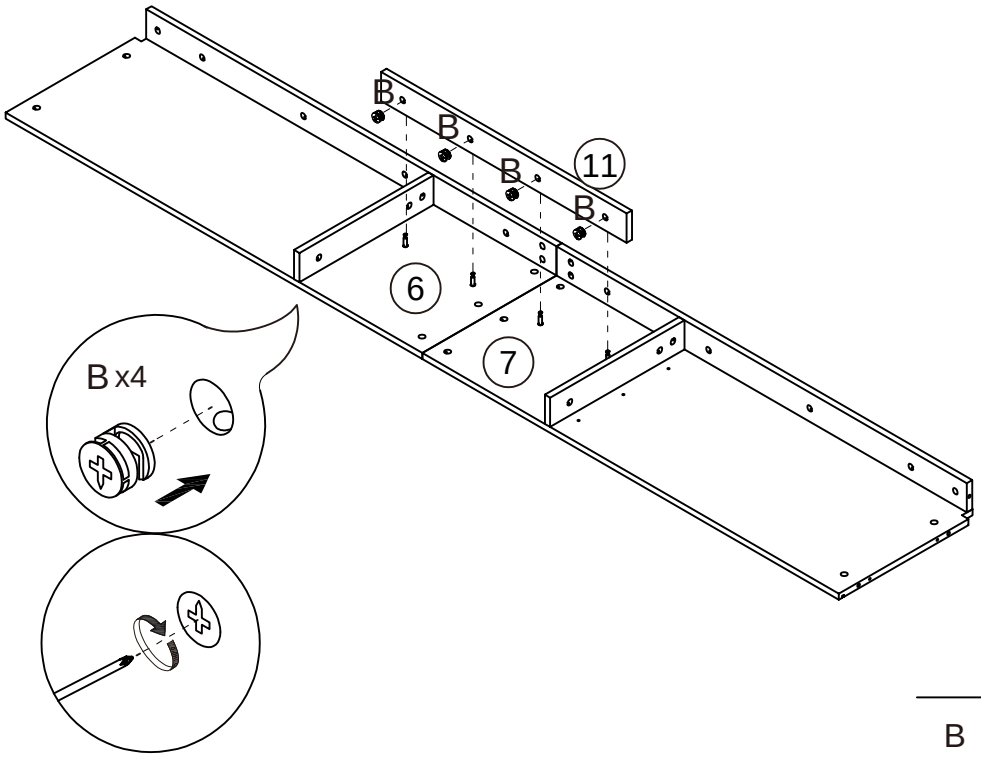

B		x4
O		x1

STEP 10

Please ensure that Plate No. 19 is clamped in the groove when tightening the E-type screw

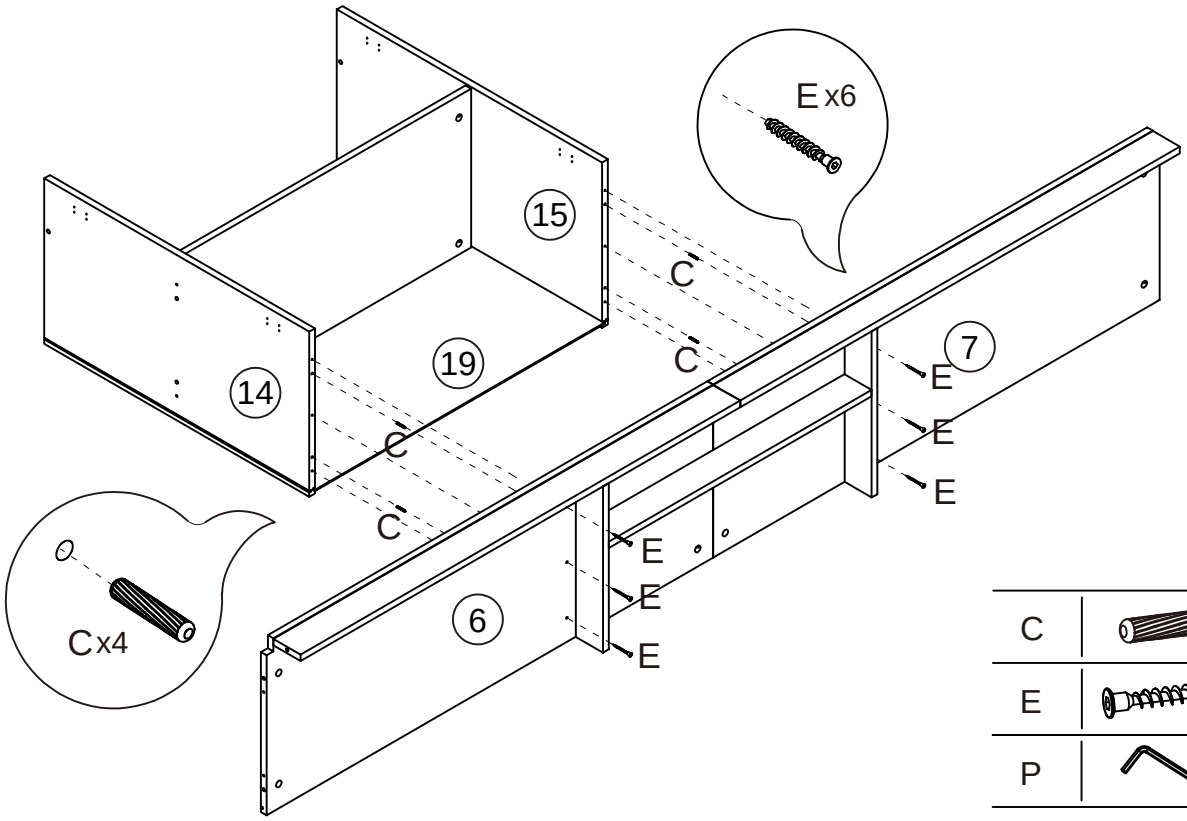

C		x4
E		x6
P		x1

Assembly Steps(EN)

STEP 11

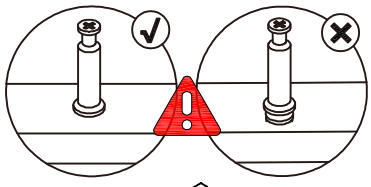

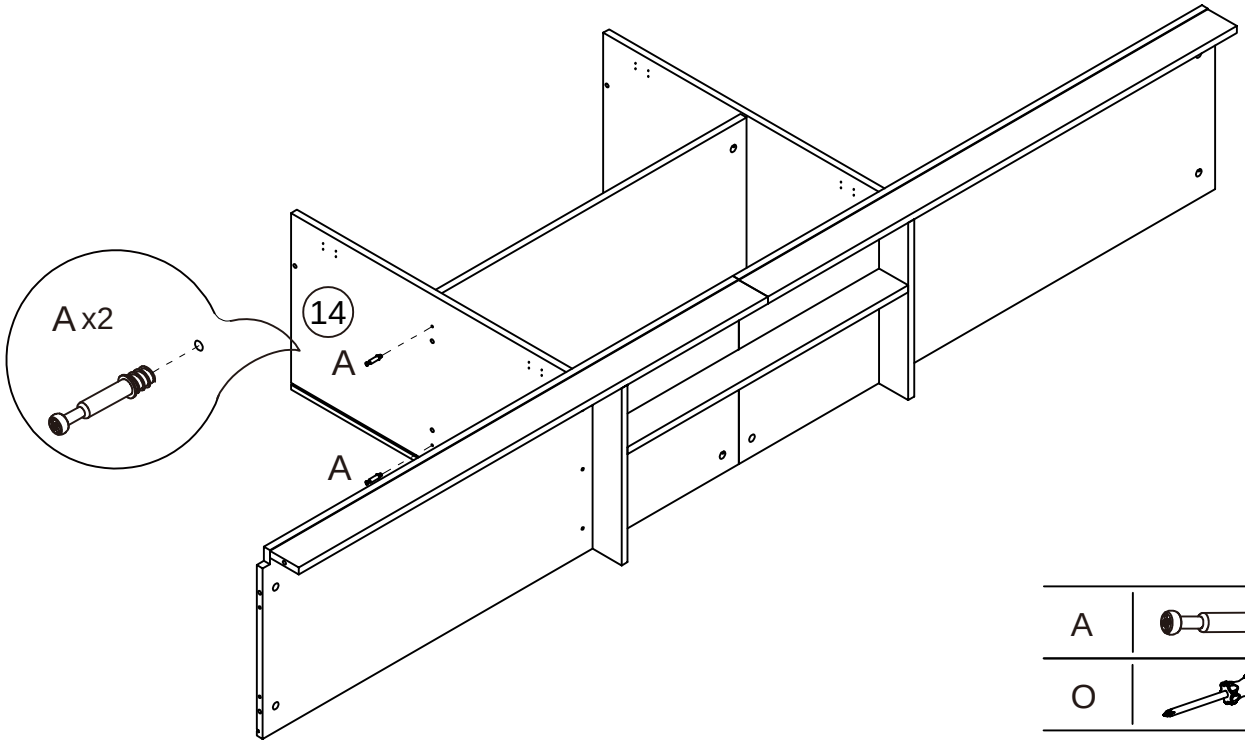

A		x2
O		x1

STEP 12

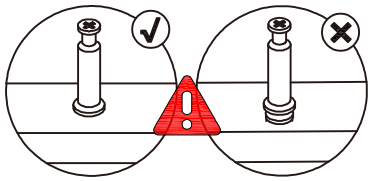

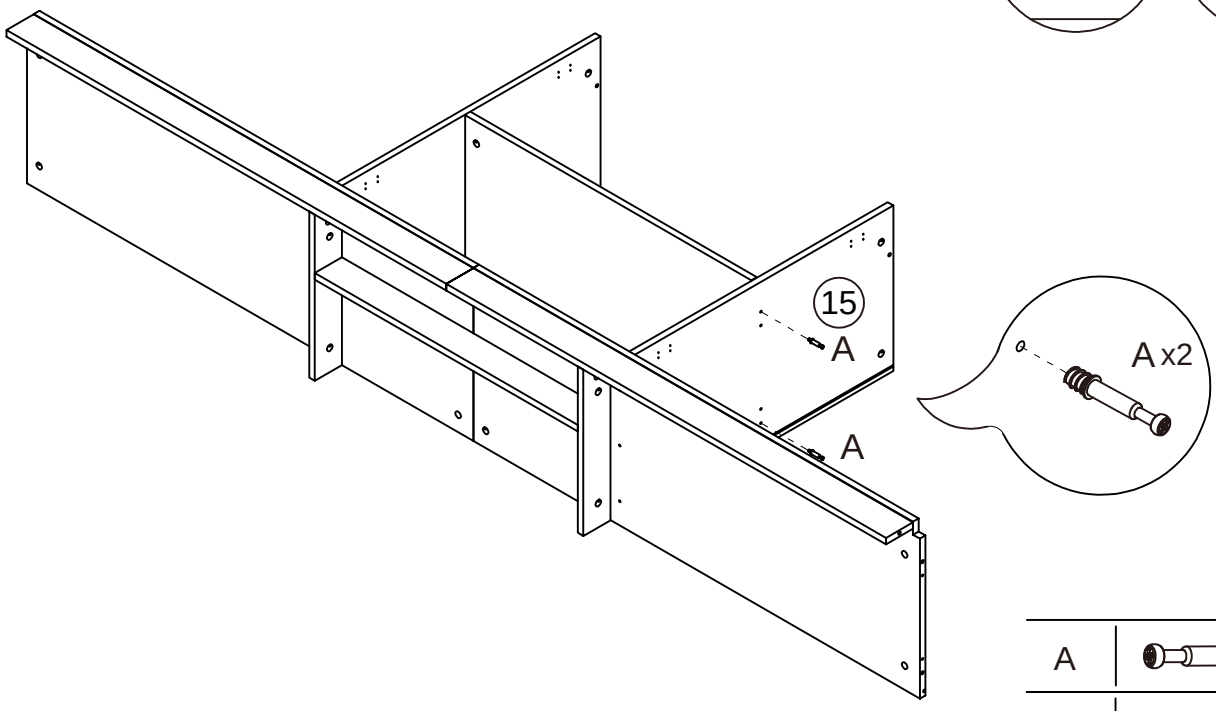

A		x2
O	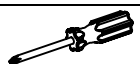	x1

Assembly Steps(EN)

STEP 13

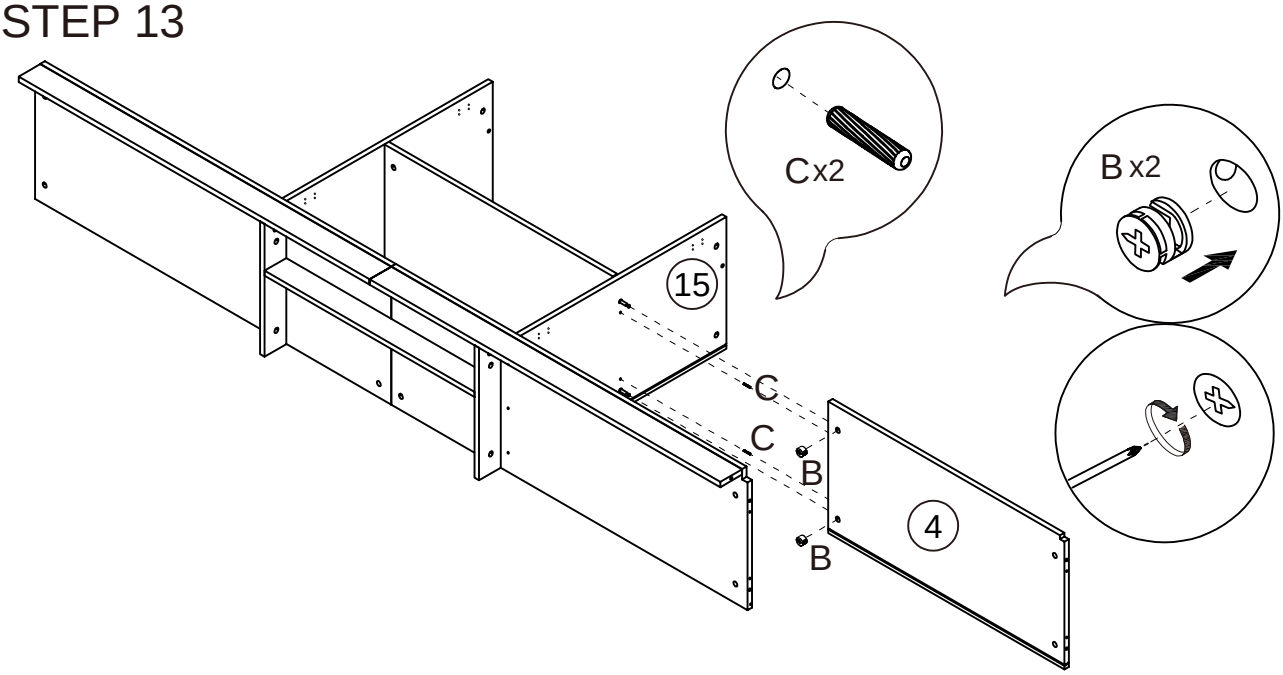

B		x2
C		x2
O		x1

STEP 14

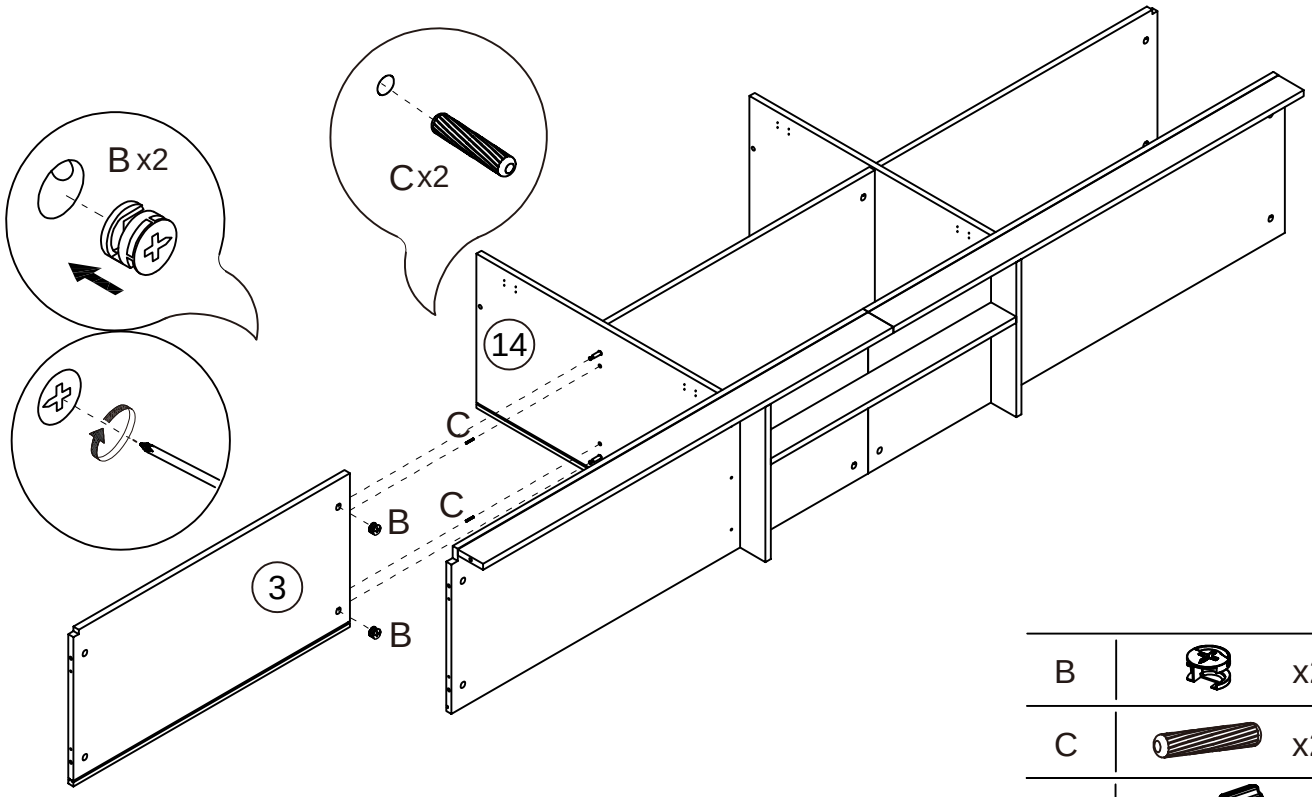

B		x2
C		x2
O	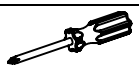	x1

Assembly Steps(EN)

STEP 15

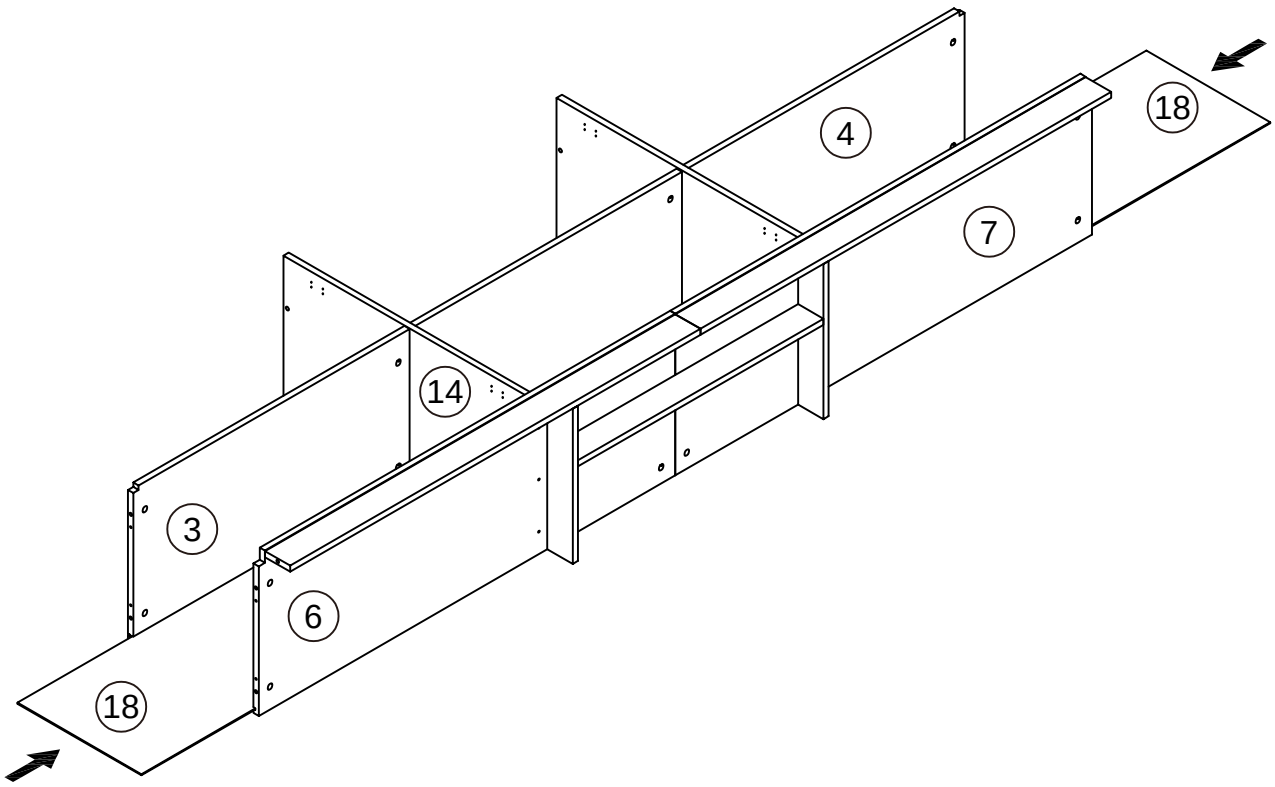

STEP 16

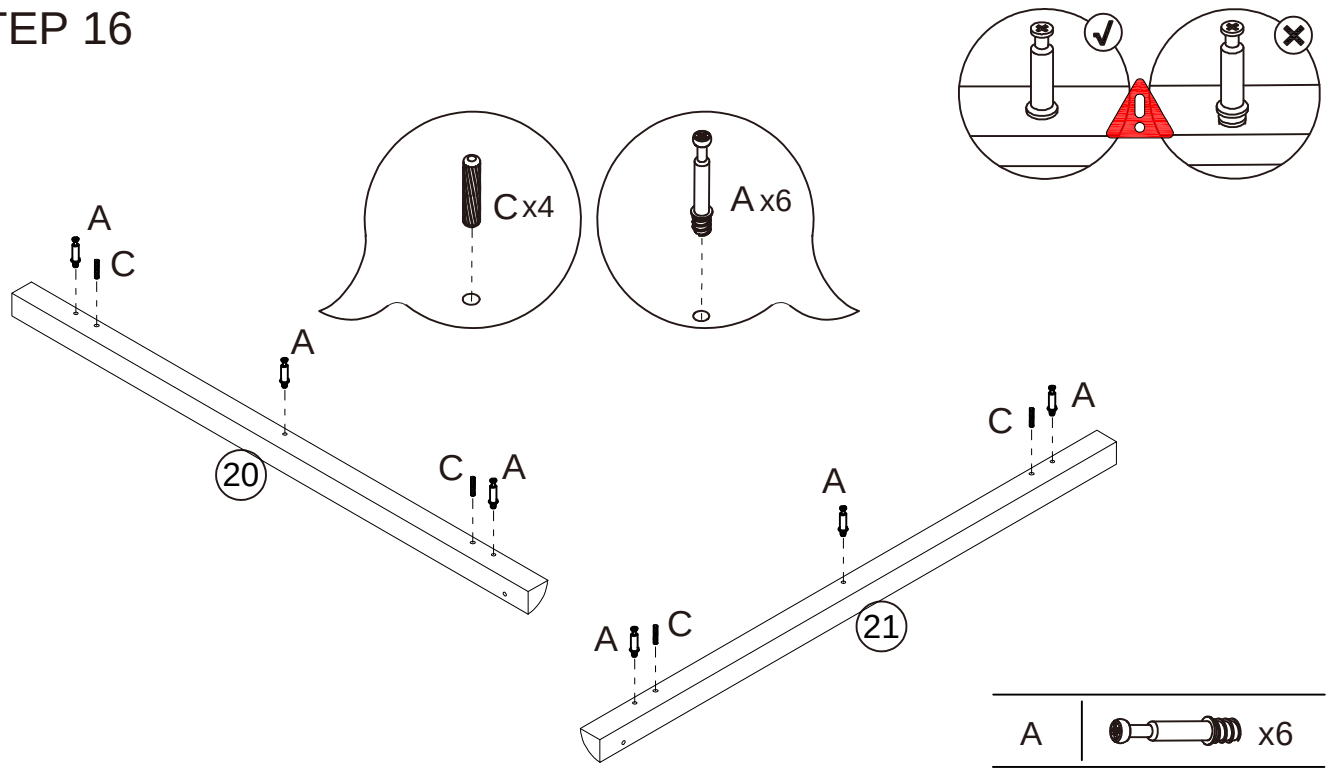

A		x6
C		x4
O		x1

Assembly Steps(EN)

STEP 17

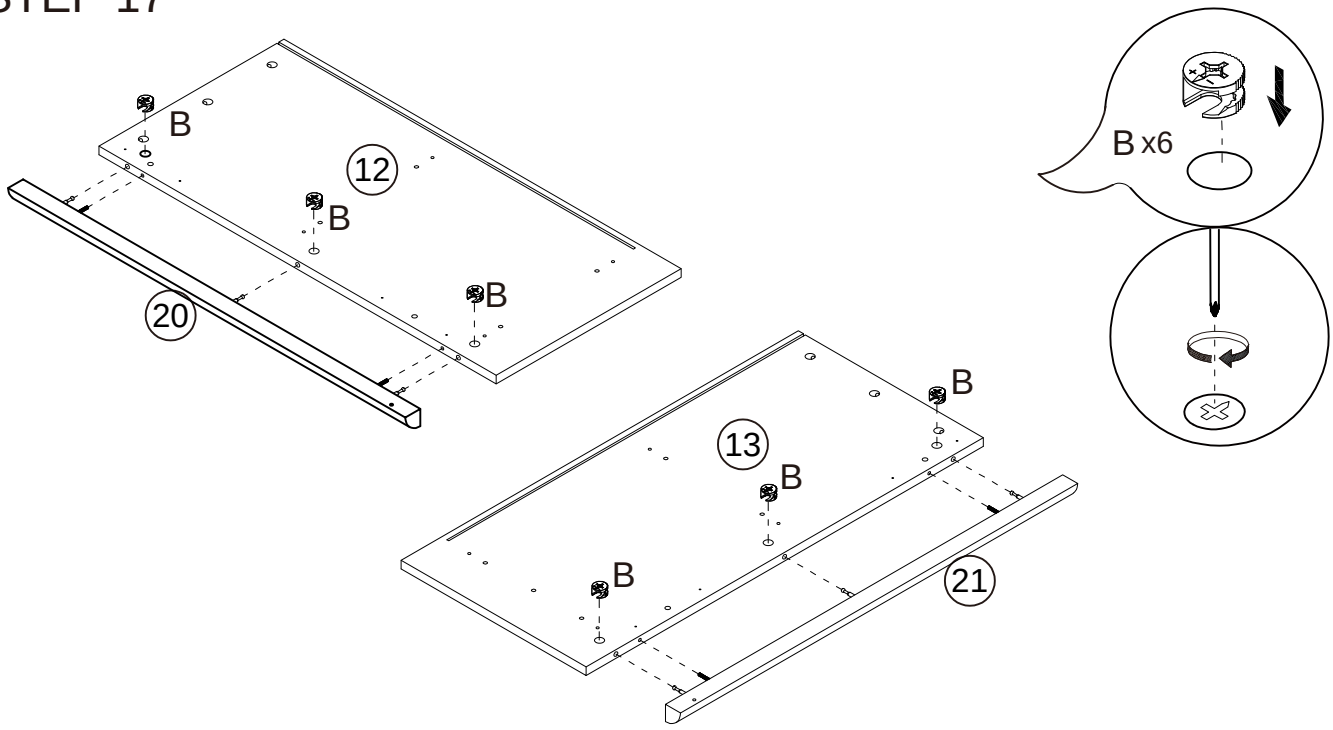

B		x6
O		x1

STEP 18

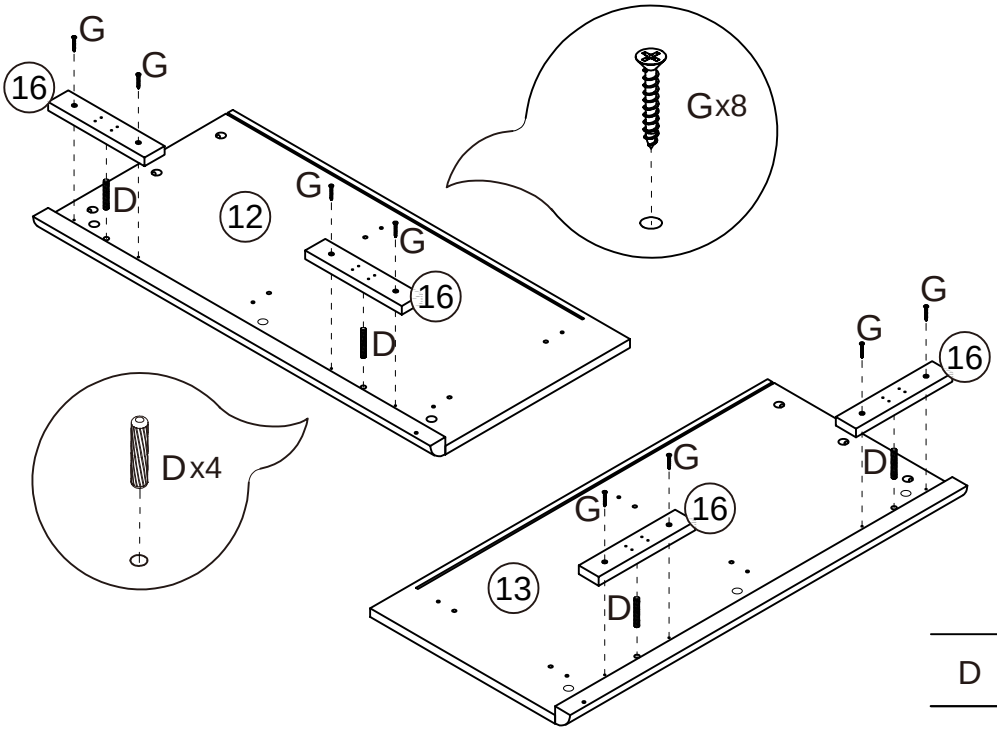

D		x4
G		x8
O		x1

Assembly Steps(EN)

STEP 19

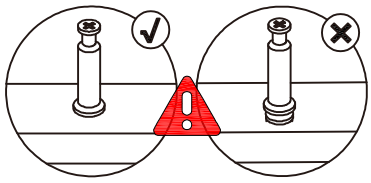

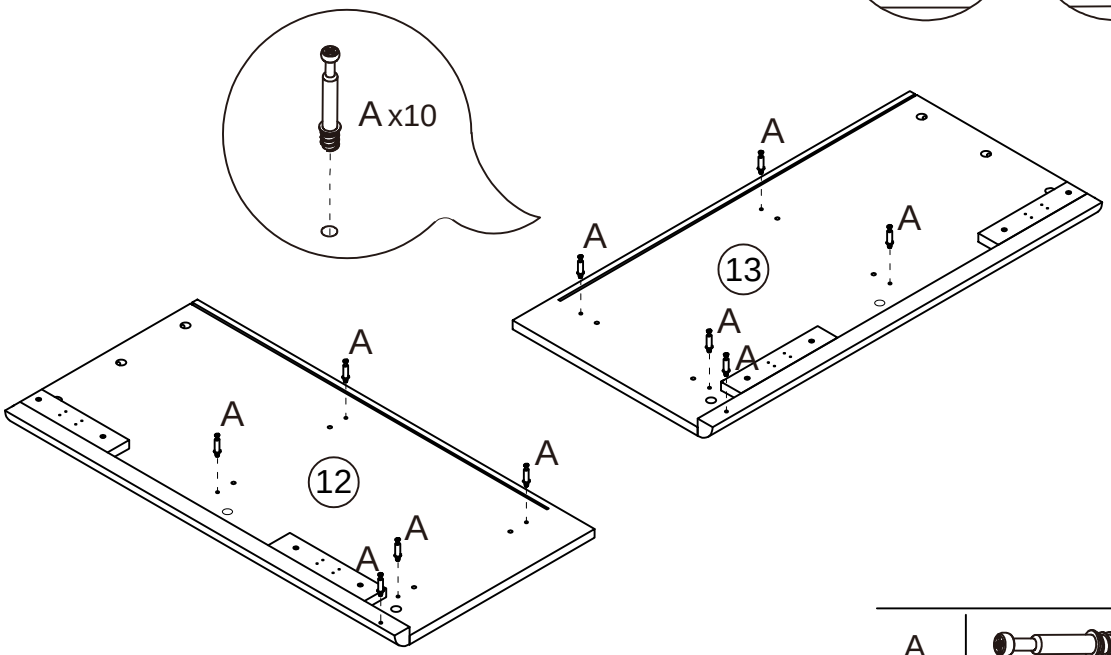

A		x10
O		x1

STEP 20

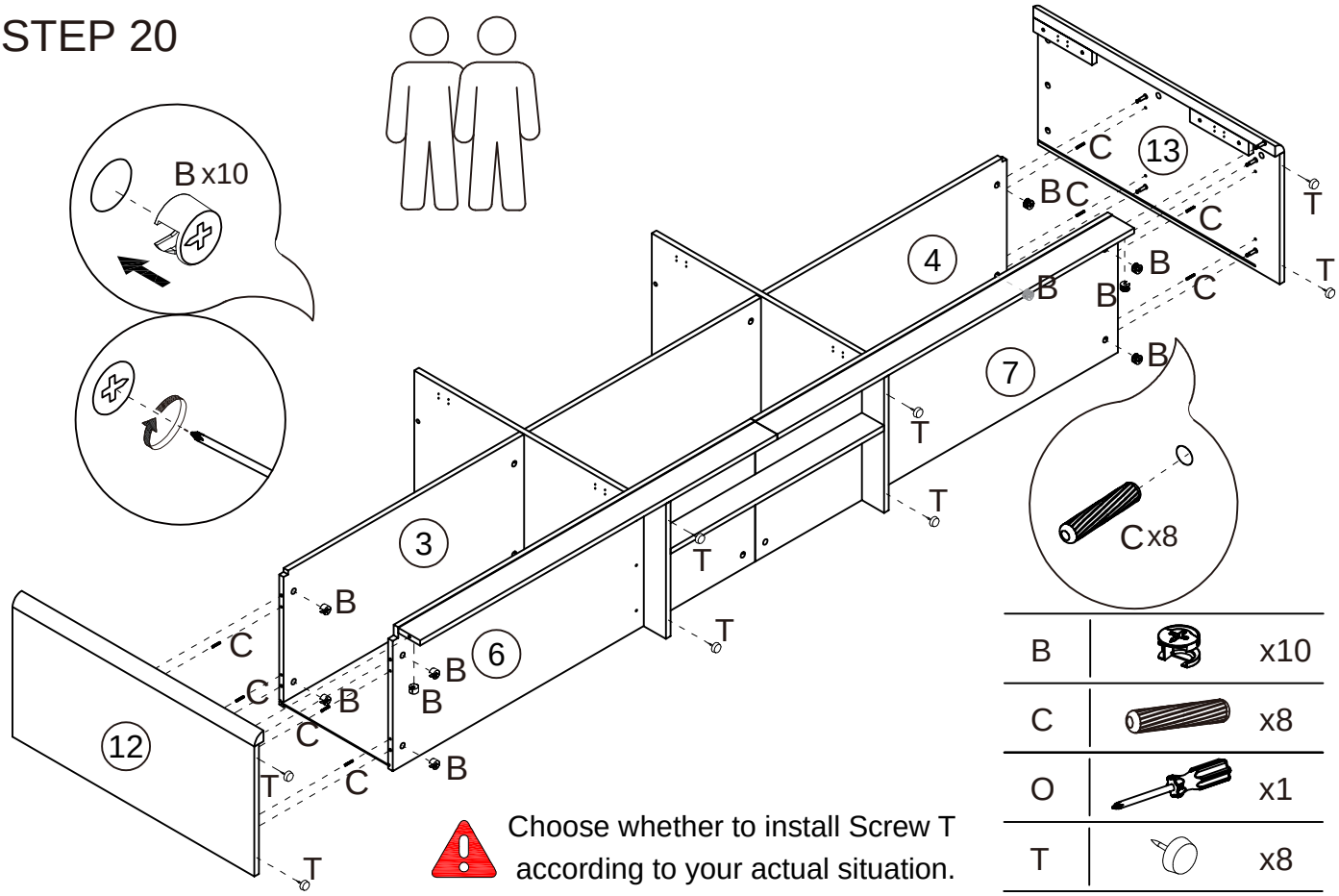

B		x10
C		x8
O		x1
T		x8

Assembly Steps(EN)

STEP 21

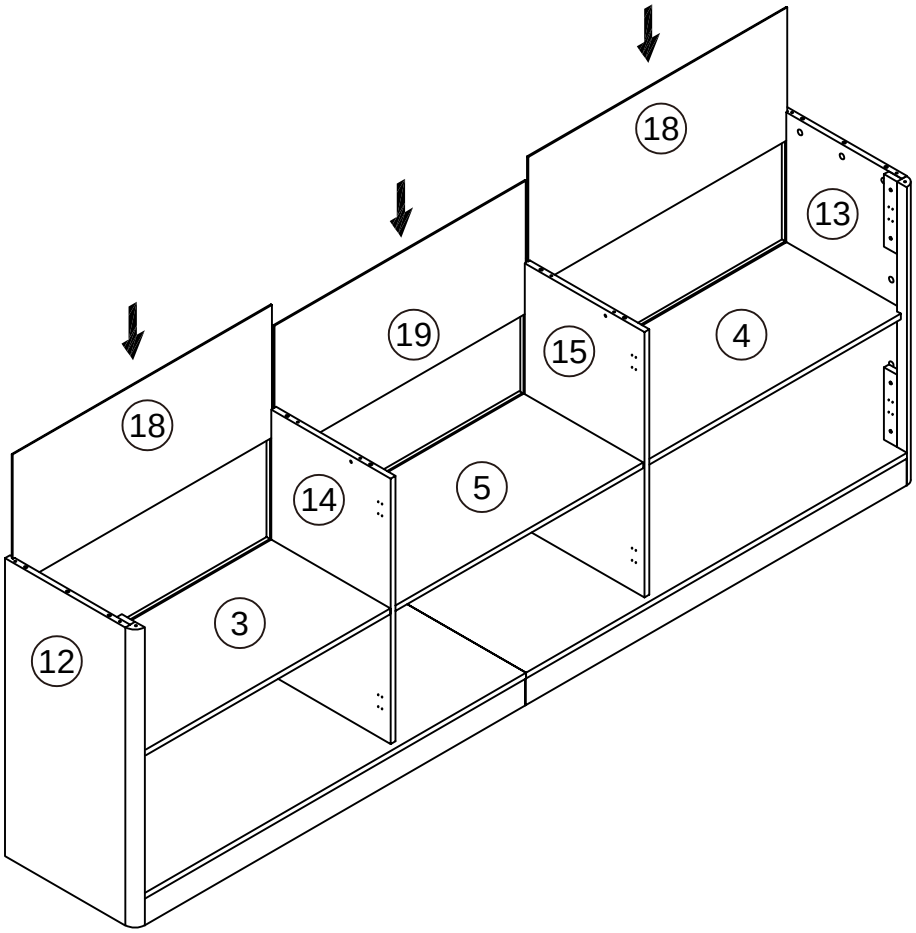

STEP 22

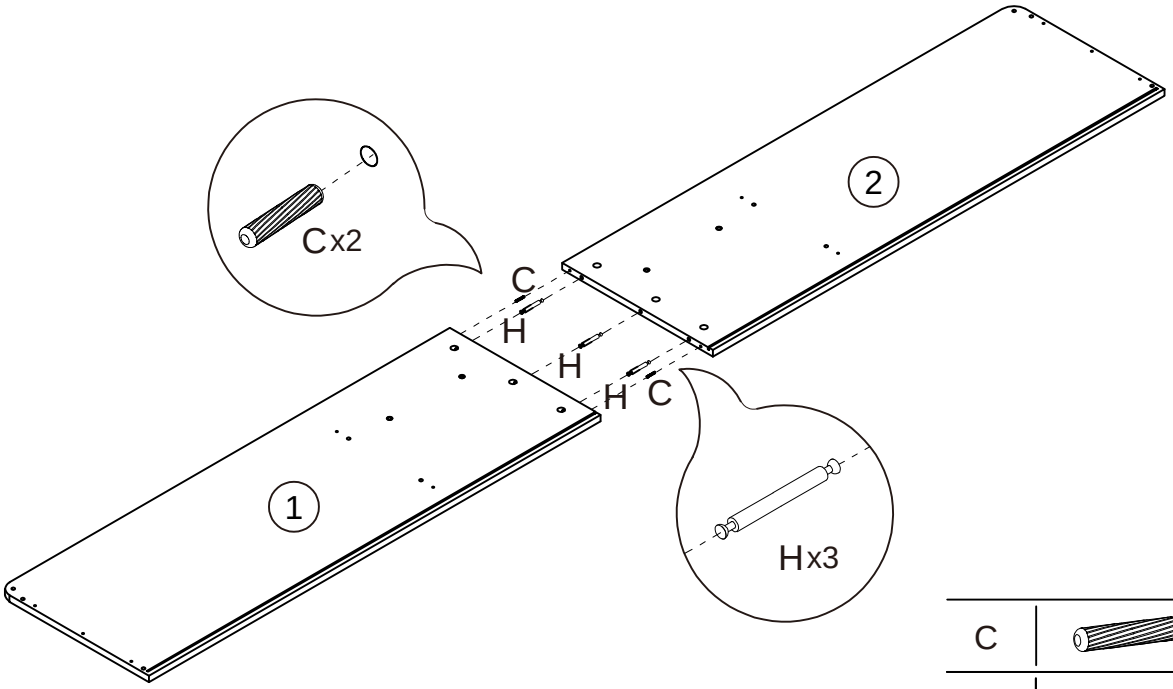

C		x2
H	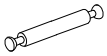	x3
O		x1

Assembly Steps(EN)

STEP 23

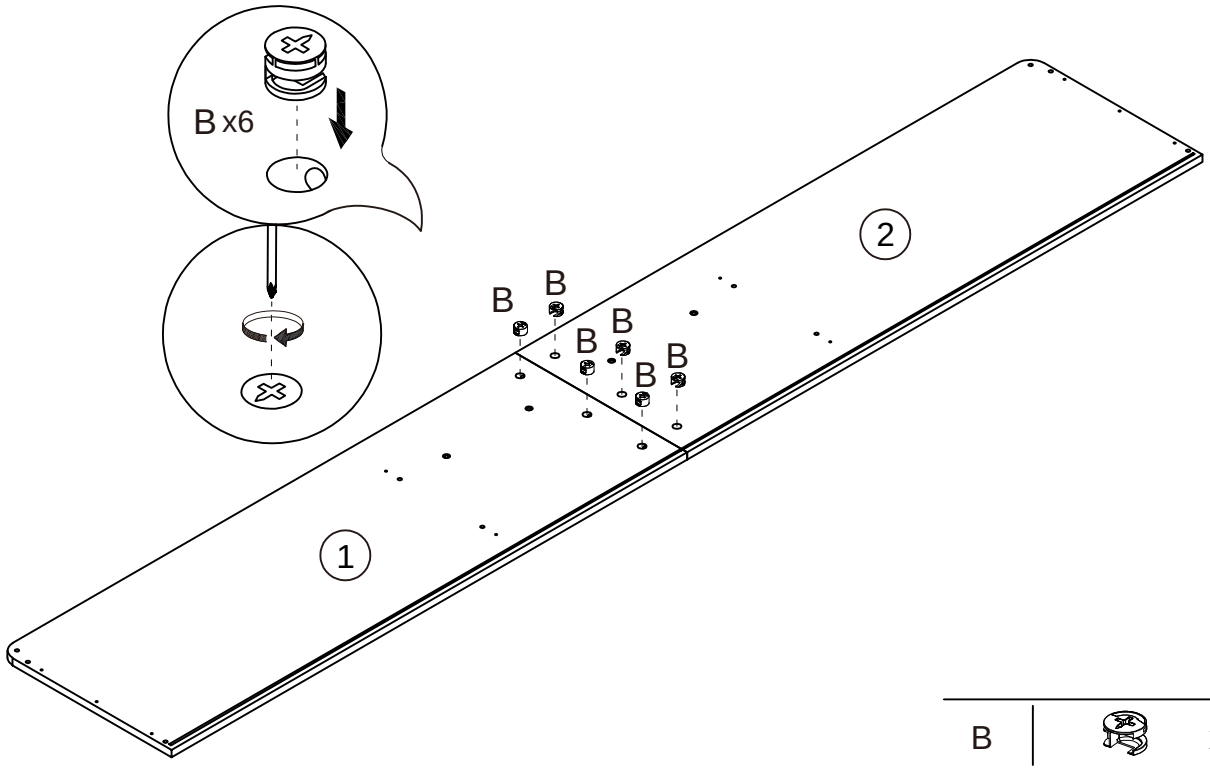

B		x6
O		x1

STEP 24

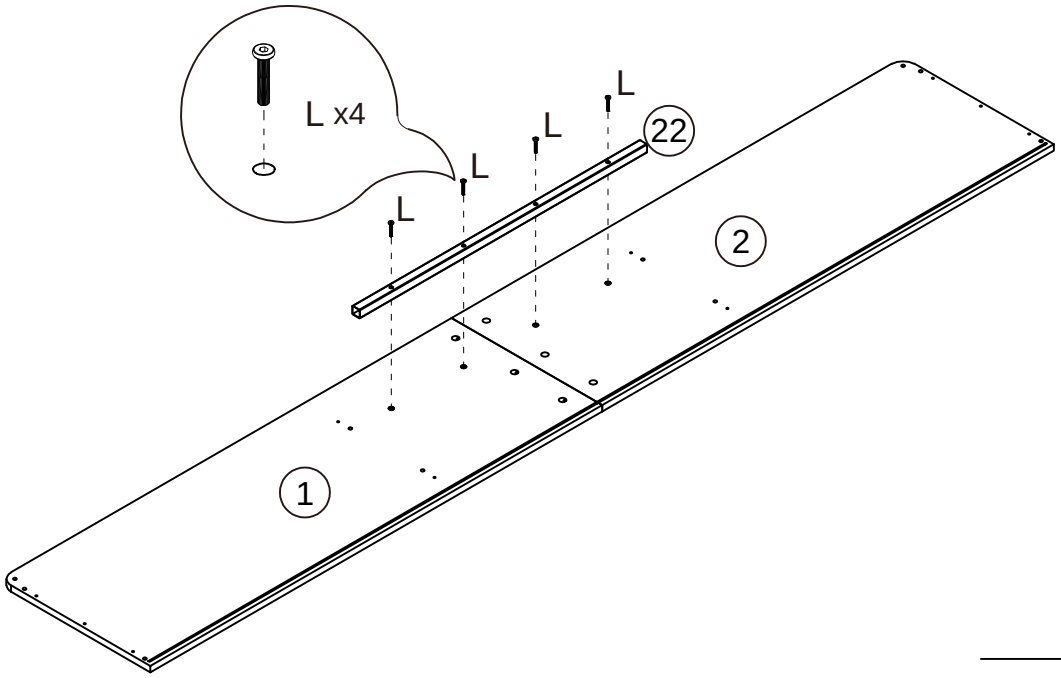

L		x4
Q		x1

Assembly Steps(EN)

STEP 25

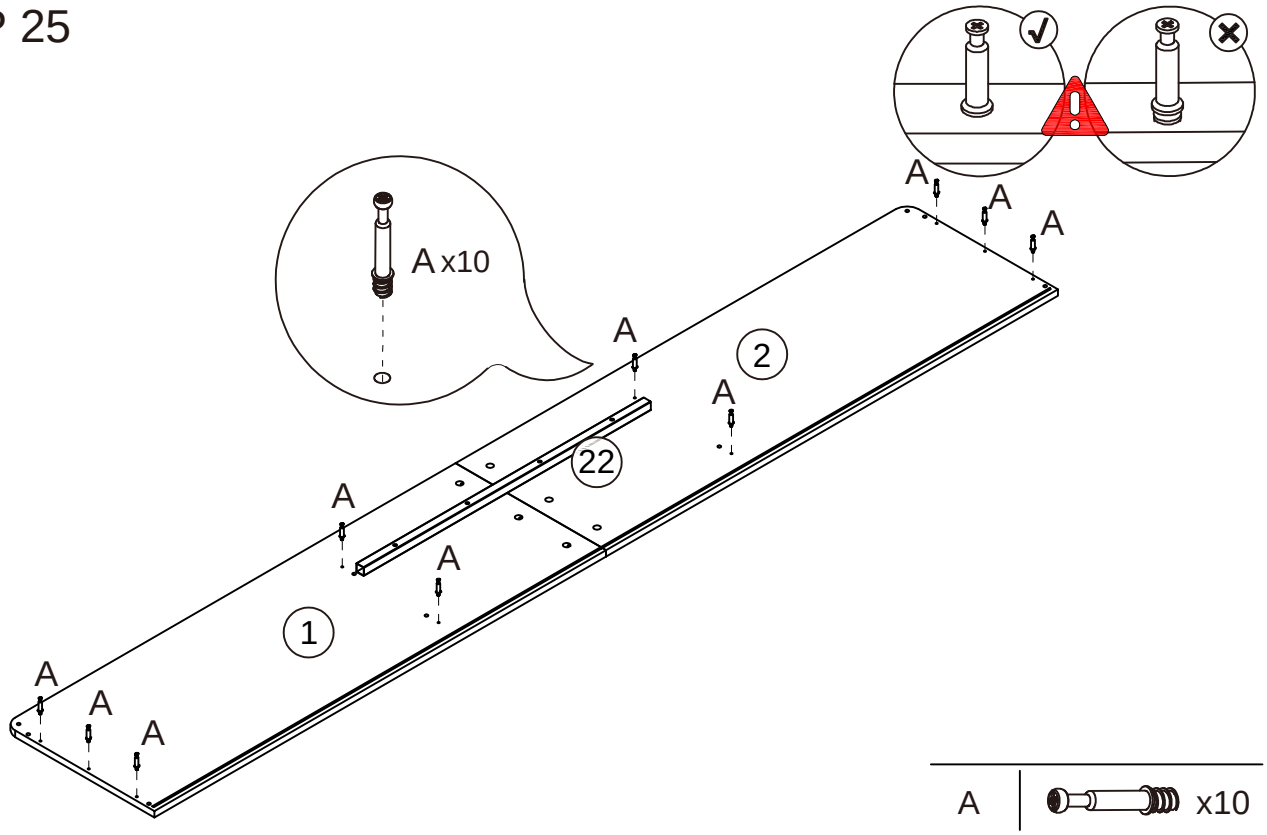

A		x10
O	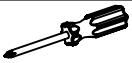	x1

STEP 26

Caution: Do not lift the panel from one end by a single person as this may cause the panel to break.

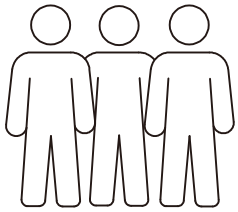

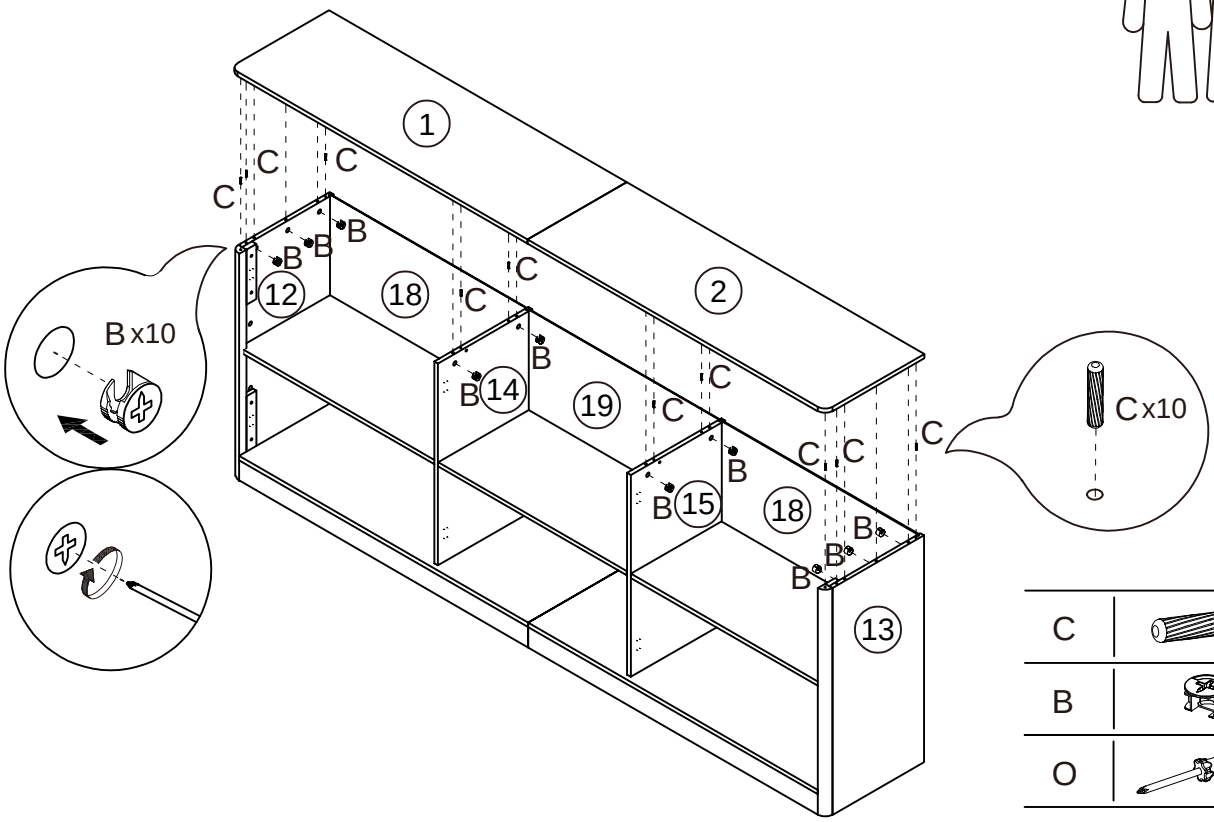

C		x10
B		x10
O		x1

Assembly Steps(EN)

STEP 27

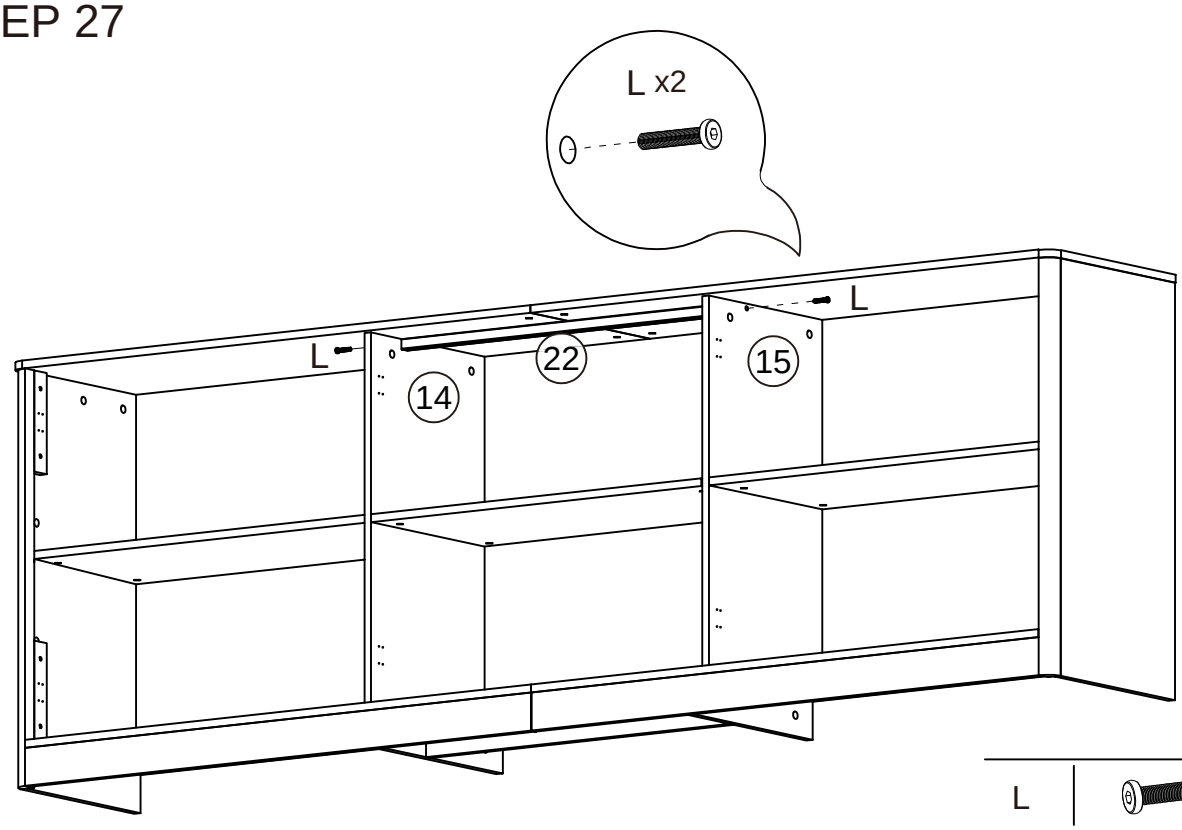

L		x2
Q		x1

STEP 28

To ensure the structural stability during use,
be sure to install the back insert buckles as shown.

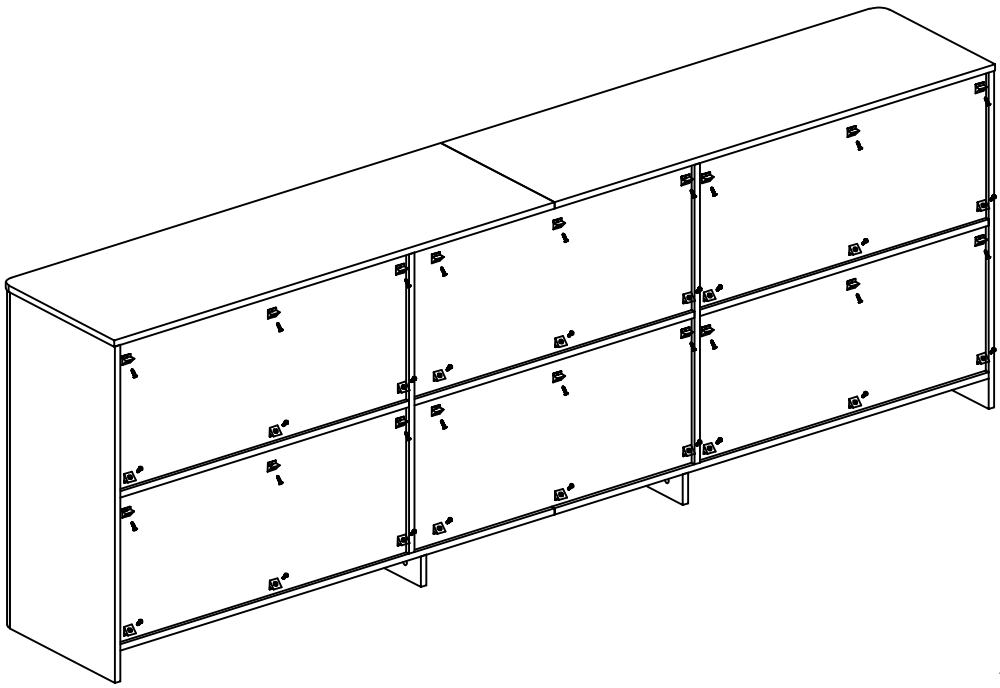

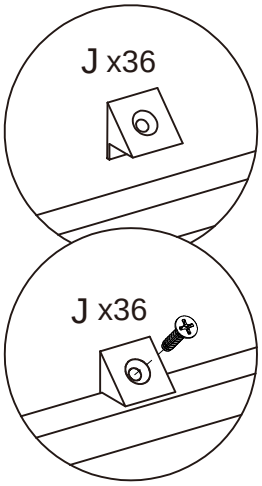

J		x36
O	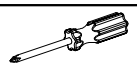	x1

ΞN)

If you encounter the following situation, please follow the steps to correct it.

1.The function of the front screw is to adjust the size of the gap between the door and the side panel.

2.The function of the rear screw is to adjust the distance between the front and rear of the door.

Assembly Steps(EN)

28-A.When the door panel is higher than the side panel.

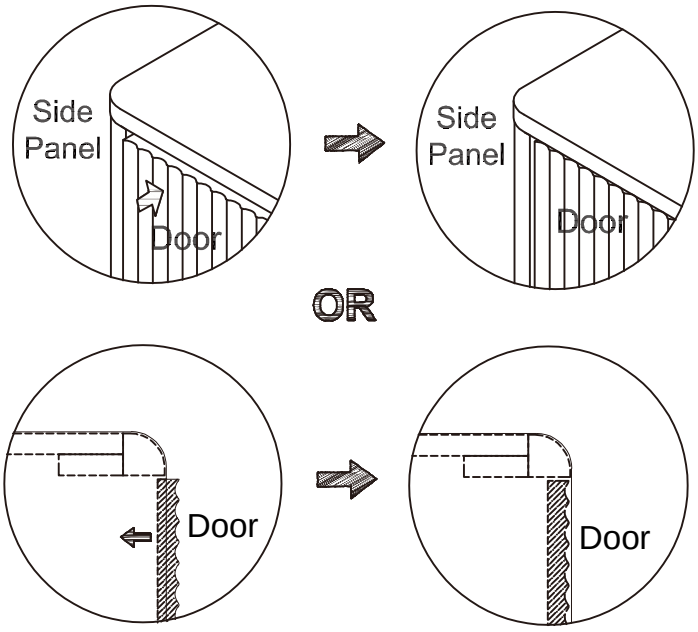

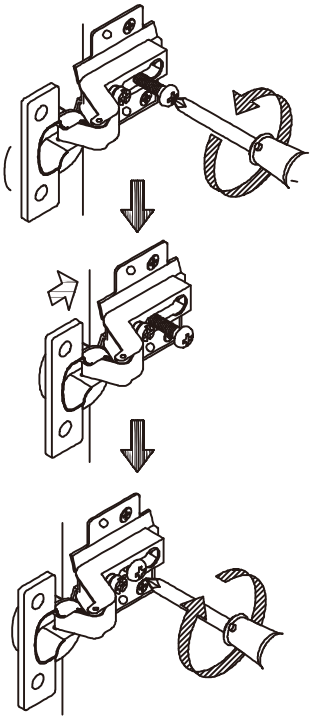

If the gap is too big between side panel and door or the door is over the edge of side panel, loosen the back screw as shown, then move in the door with hinge and tighten the back screw as shown when the gap is just well.

28-B.When the door panel is lower than the side panel, an indentation occurs.

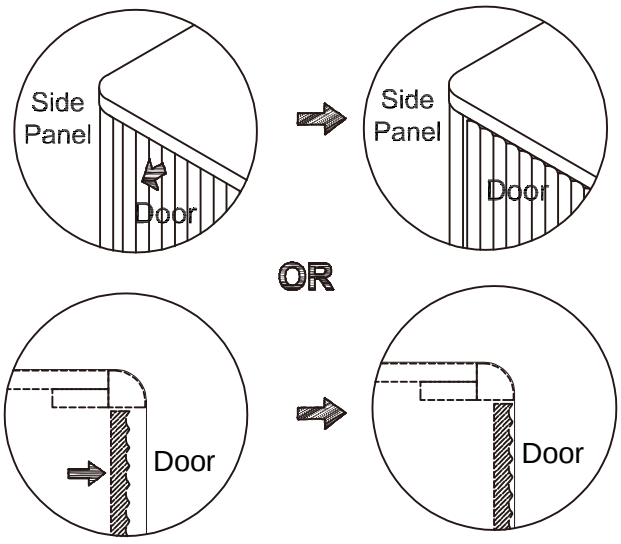

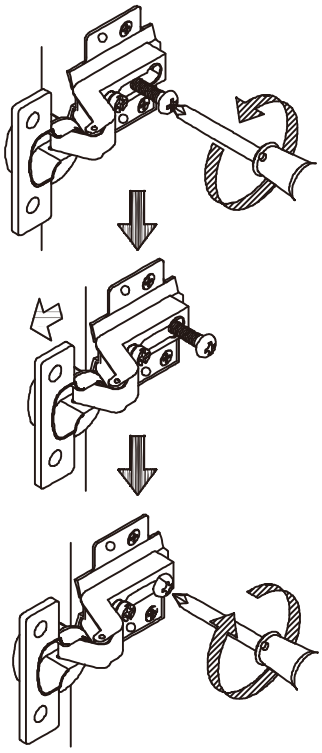

If the gap is too small between side panel and door or the door sank in side panel, loosen the back screw as shown, then move out the door with hinge and tighten the back screw as shown when the gap is just well.

Assembly Steps(EN)

28-C

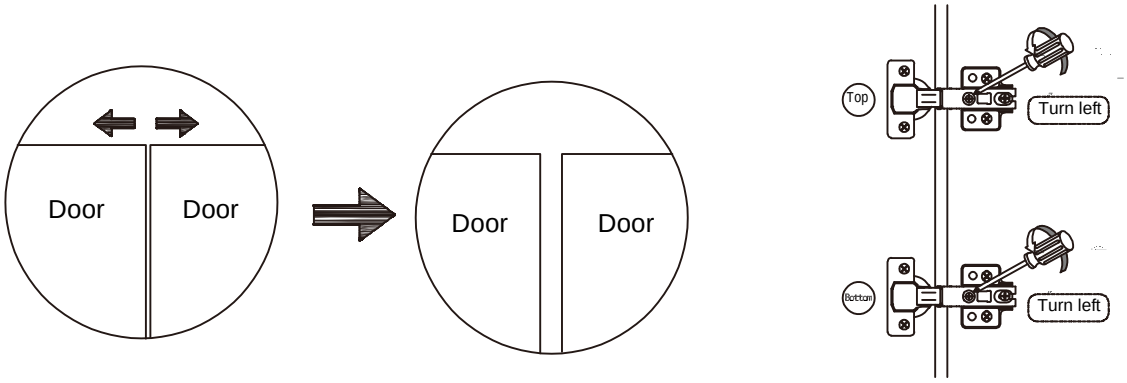

If the gap between the two doors is too small, follow the diagram.

28-D

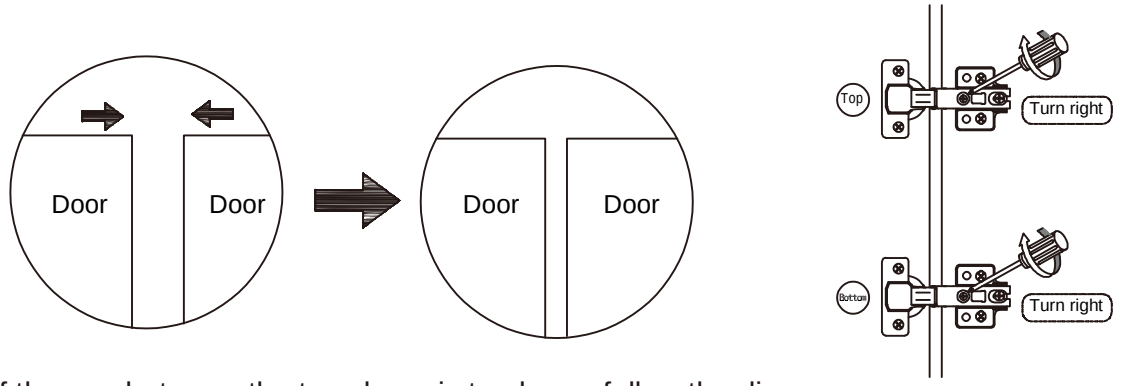

If the gap between the two doors is too large, follow the diagram.

28-E

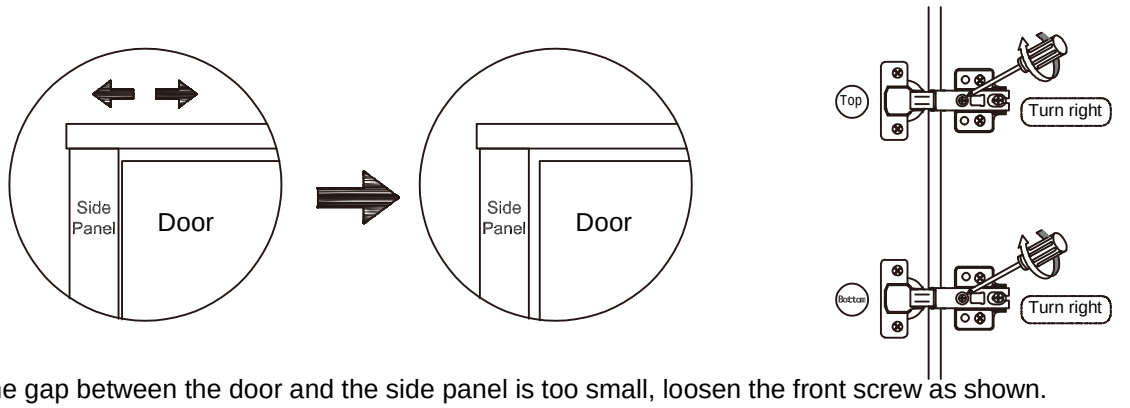

If the gap between the door and the side panel is too small, loosen the front screw as shown.

28-F

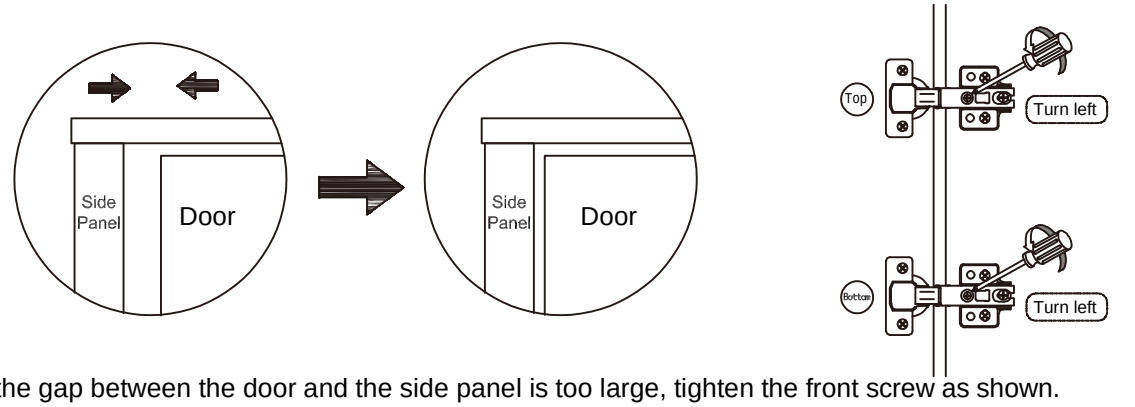

If the gap between the door and the side panel is too large, tighten the front screw as shown.

Assembly Steps(EN)

28-G.When door is leaning

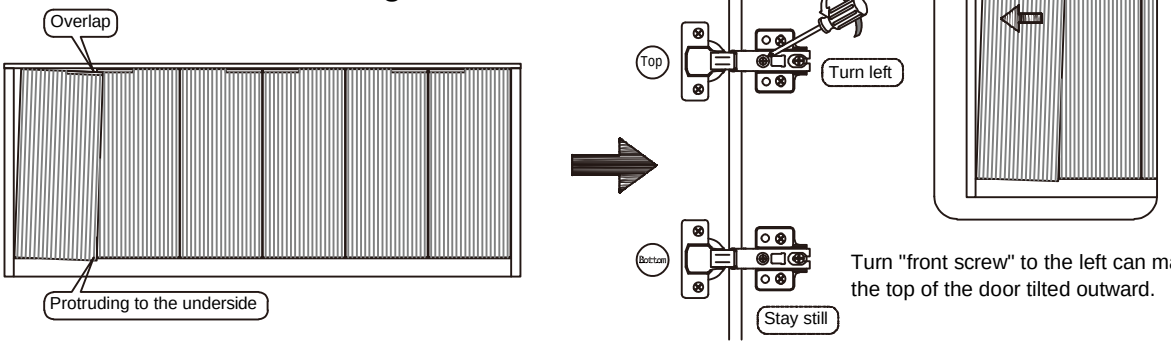

Turn "front screw" to the left can make the top of the door tilted outward.

28-H.When door is leaning

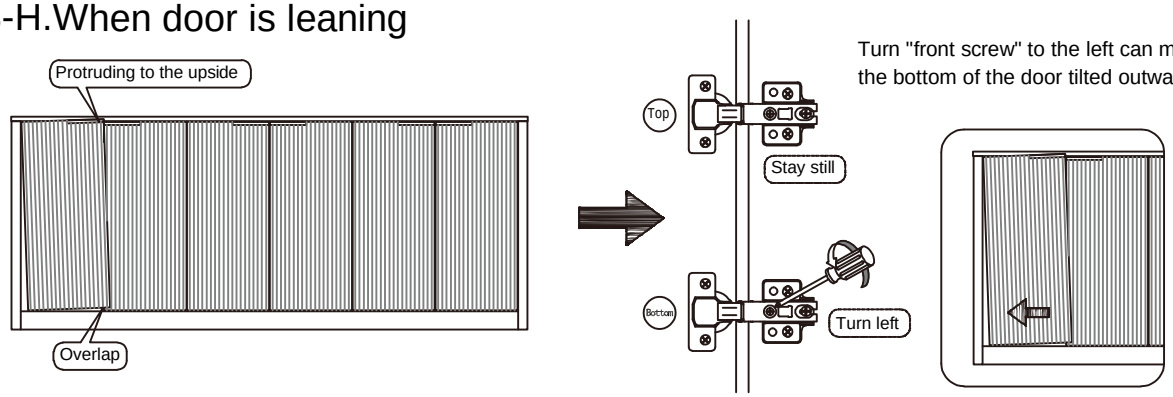

Turn "front screw" to the left can make the bottom of the door tilted outward.

28-I.When the door is higher on top

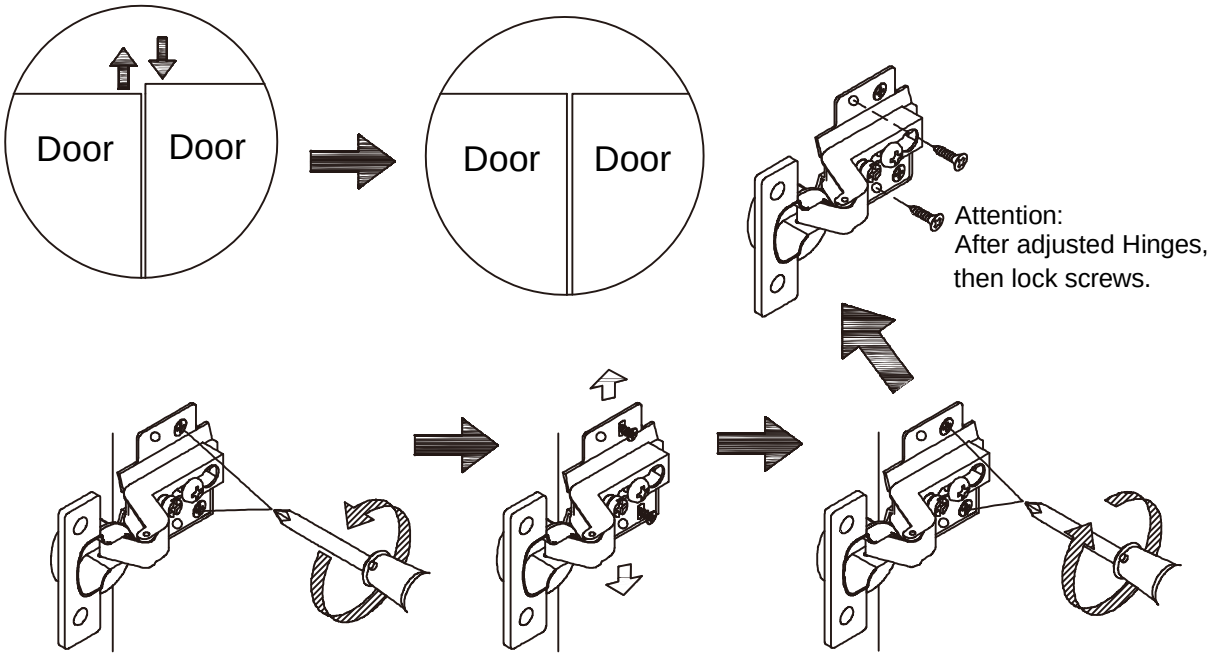

Attention:
After adjusted Hinges, then lock screws.

If the doors are not in same level, loosen the back screws on wing, then adjust the door up and down, tighten the screws when both doors are in same level.
Screw front two screws on wing when all are in place.

Assembly Steps(EN)

STEP 29

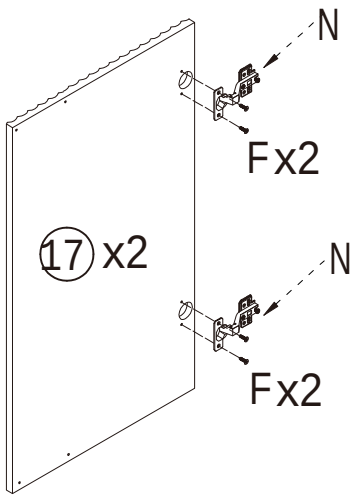

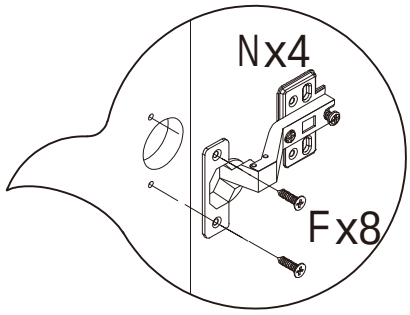

Before installing the door panels, please study and read the following steps. For possible problems, we have given some suggestions to solve the problems you encounter.

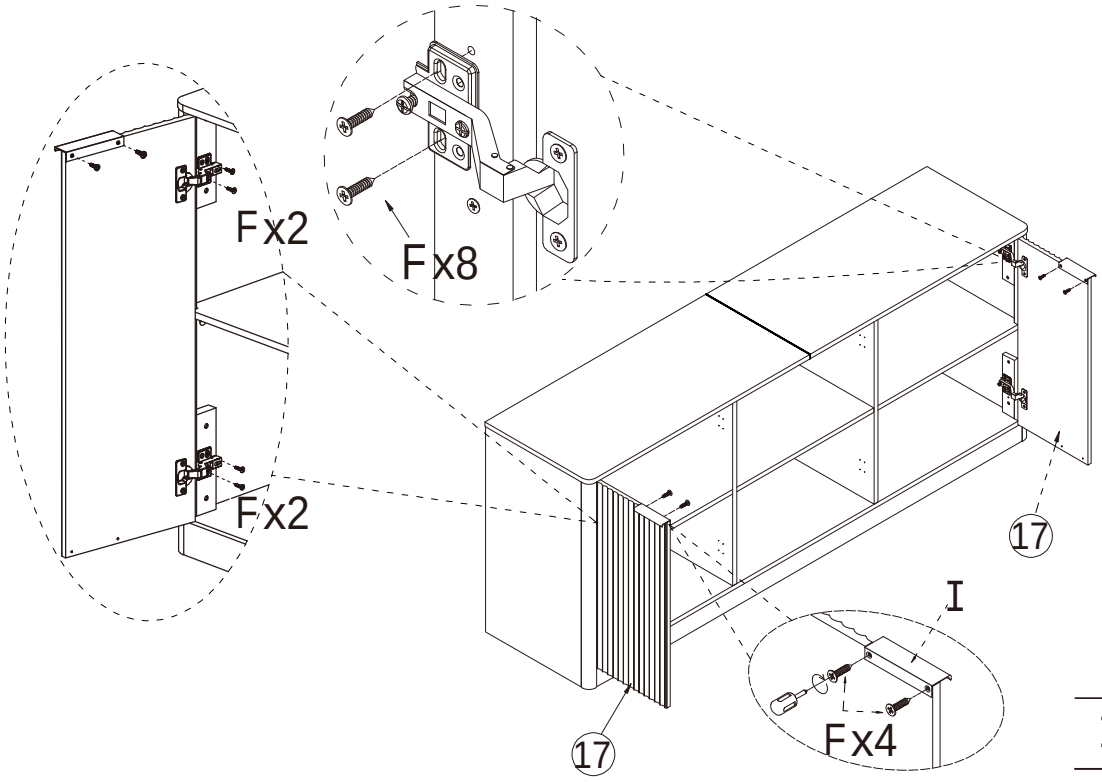

I		x2
N	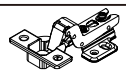	x4
F		x20
0	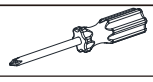	x1

The letter "N" hinge door is installed on both sides of the cabinet.

Assembly Steps(EN)

STEP 30

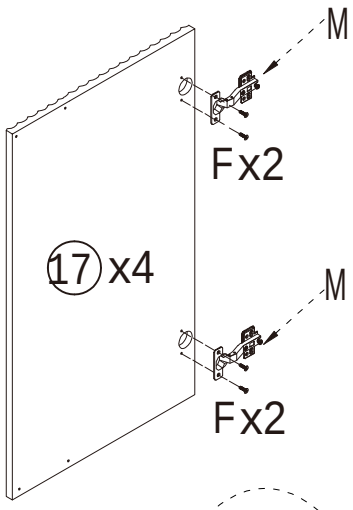

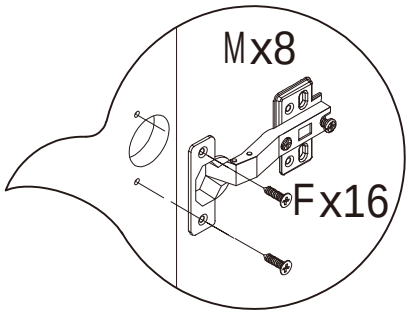

Before installing the door panels, please study and read the following steps. For possible problems, we have given some suggestions to solve the problems you encounter.

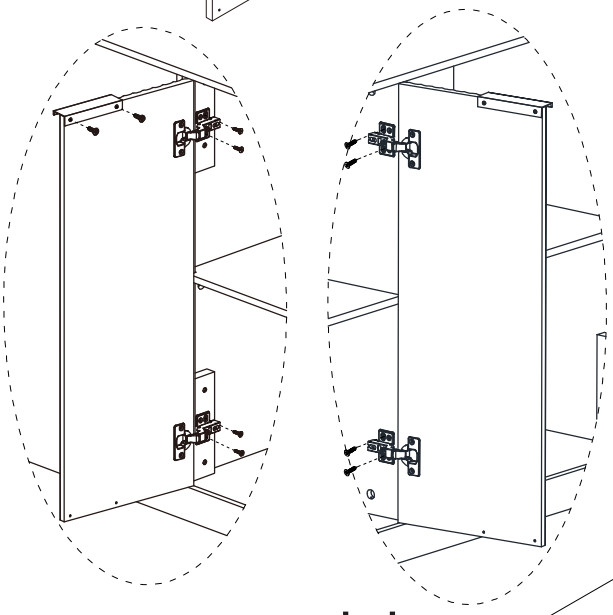

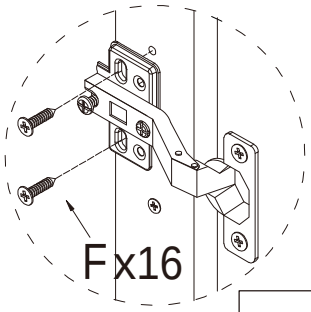

If the doors are not in the same level, loosen the back screws on wing, then adjust the door up and down

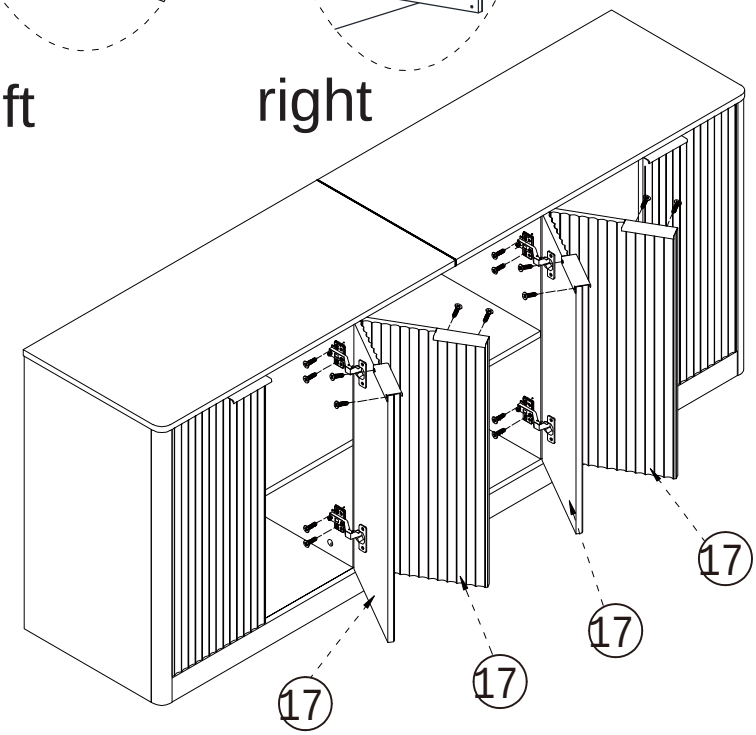

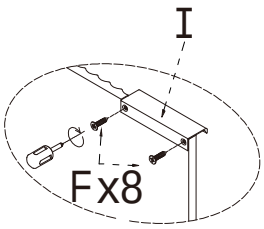

The letter "M" hinge door is installed in the middle of the cabinet.

I		x4
M		x8
F		x40
0	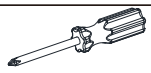	x1

Assembly Steps(EN)

STEP 31

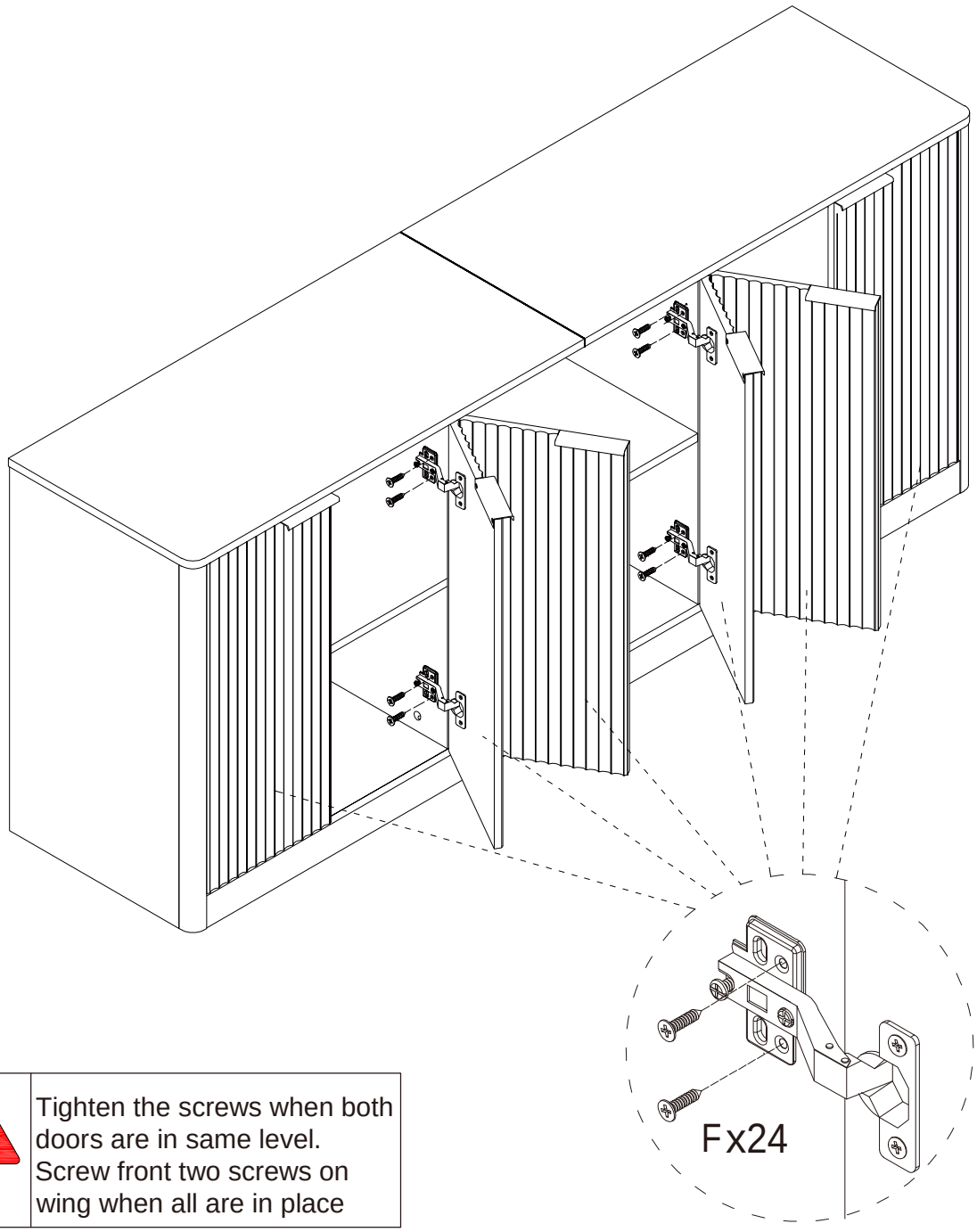

⚠	Tighten the screws when both doors are in same level. Screw front two screws on wing when all are in place

NOTE:
If there is a large gap in the installation of the door, you can return to page 21 or page 25 to view the installation video and installation tutorial.

F	x24
0	x1

Assembly Steps(EN)

STEP 32

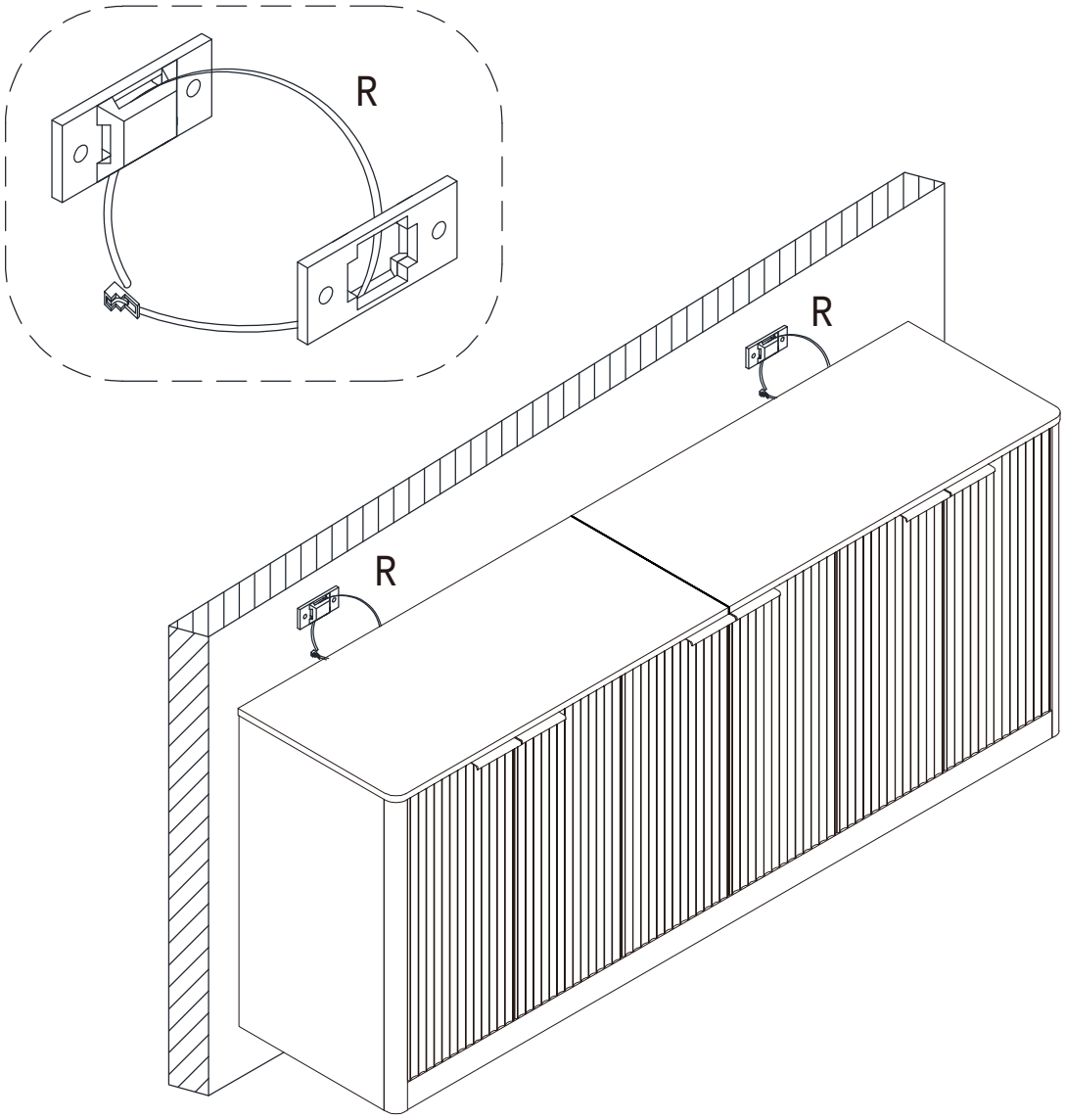

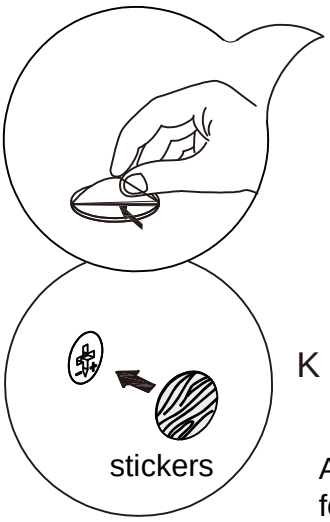

K x68

Final

Apply screw stickers over exposed screw holes for aesthetics.

K	x68
R	x2
0	x1