ASSEMBLY INSTRUCTION
BAUANLEITUNG

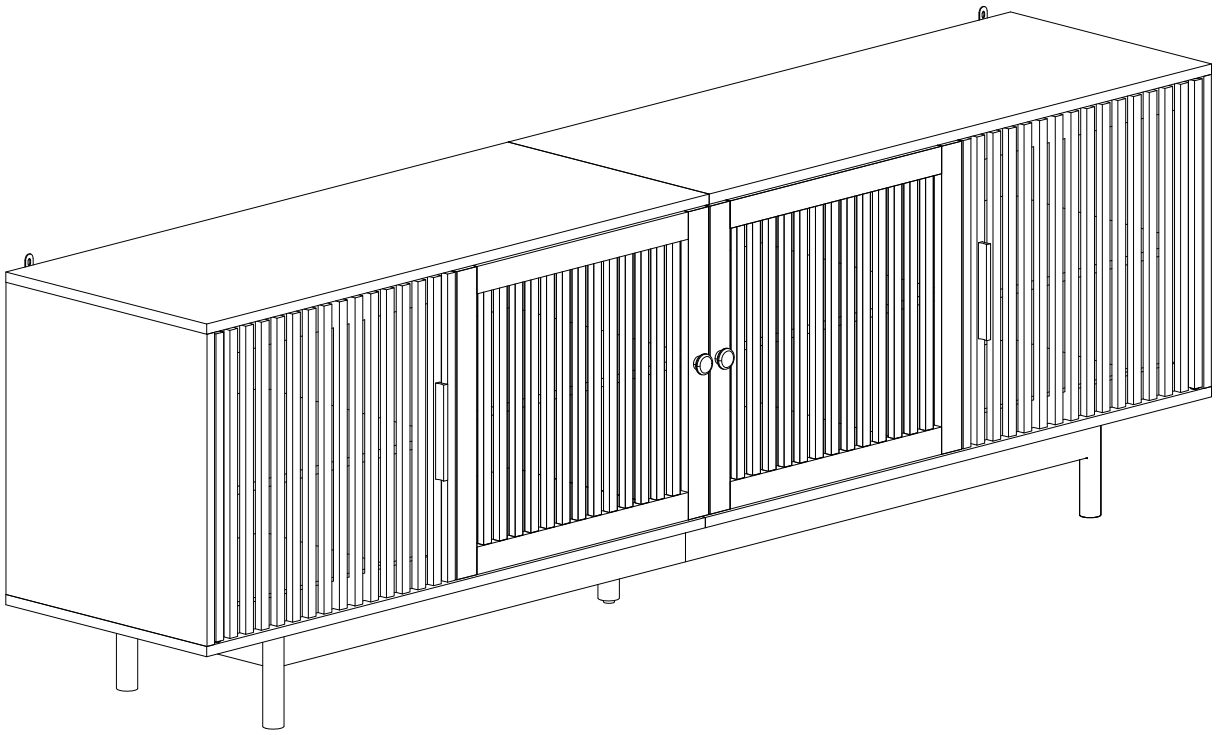

Before Installation

Important-Please read these instructions fully before starting assembly

Thank you for purchasing this quality product.Be sure to check all packing materials carefully for small parts,which may have come loose inside the carton during shipment.Identify and count all items according to the PARTS LIST and/or HARDWARE LIST shown below.Check you have all the components and tools listed on the following pages.

●We recommend that you assemble this product with the assistance of another person;this will make the assembly easier,and will help eliminate damage to the product or injury to persons during assembly.

●Please do not over tighten screws or bolts until the assembly is completed.

●Keep children and animal away from the work area,small parts could choke if swallowed.Please put all parts on a non-abrasive floor before assembly,and follow the assembly steps to assemble your newly purchased product correctly and efficiently.

Cam Lock Assembly Instructions

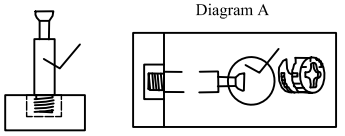

Insert Cam Bolt into hole as shown in diagram A.

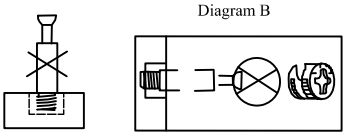

Make sure not to insert the Cam Bolt:
Too deep as shown in figure B as this will cause the Cam Lock to be misaligned and unable to interlock properly.

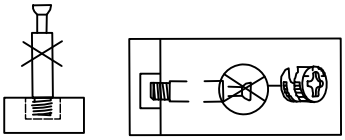

Also avoid inserting the Cam Bolt too close to the surface of the hole as shown in figure C,as this will cause the Cam Lock to be too loose,and not interlock properly.

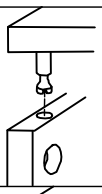

Connect the panels together.

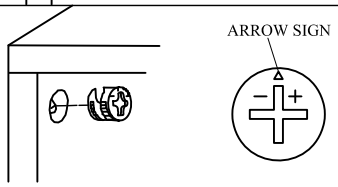

Insert the Cam Lock so the side opening fits over the head of the Cam Bolt.

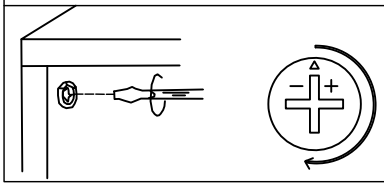

To tighten the Cam Lock,turn it clockwise on half a turn with a flat screwdriver.
*Do not use an automatic screwdriver as it may bend or break if too much power is imposed.

Parts list

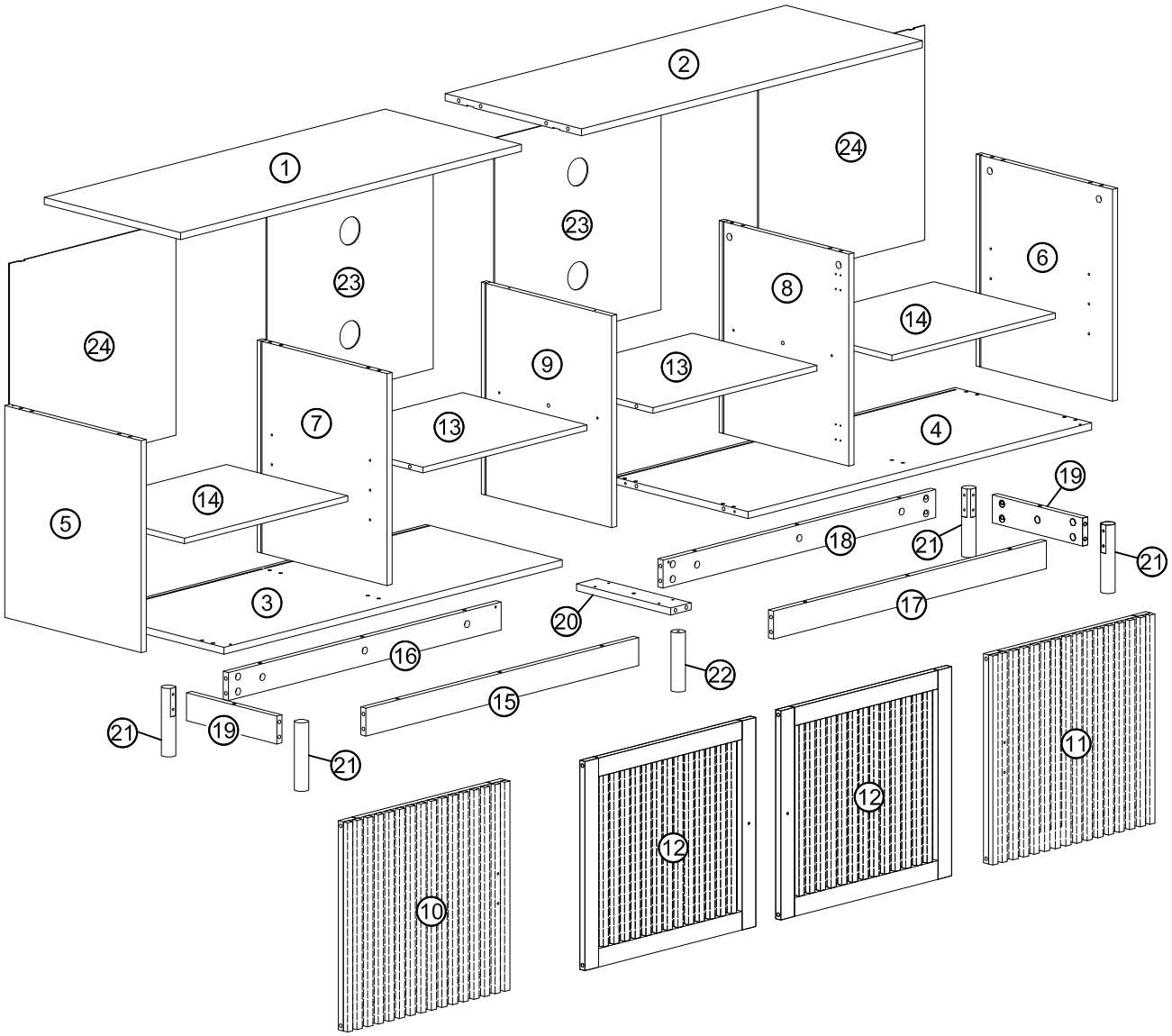
1
2
3
4
5
6
7
8
9
10
11
12
12
13
13
14
14
15
16
17
18
19
19
20
21
21
21
22
23
23
24
24

① x 1 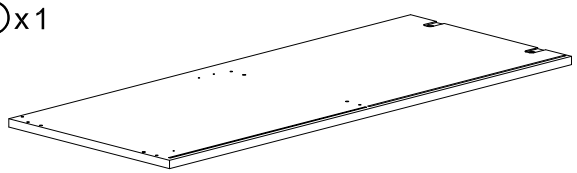	② x 1 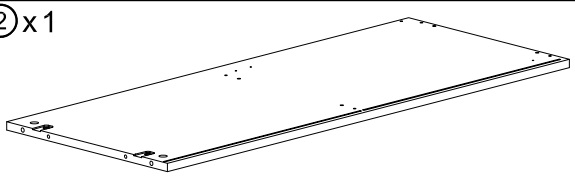	
③ x 1 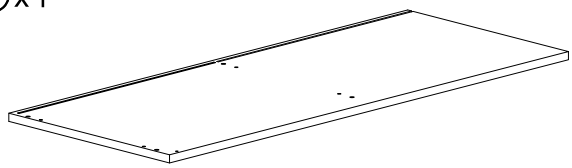	④ x 1 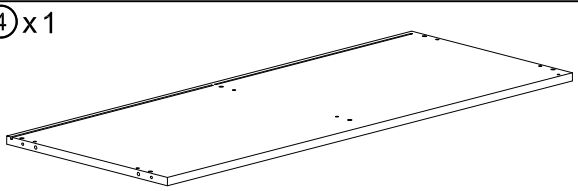	
⑤ x 1 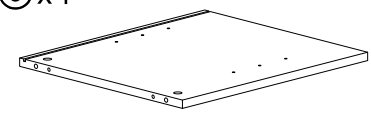	⑥ x 1 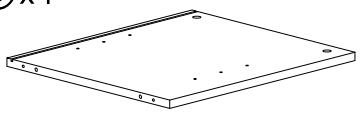	⑦ x 1 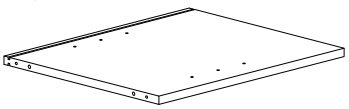
⑧ x 1 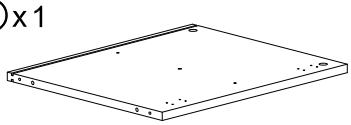	⑨ x 1 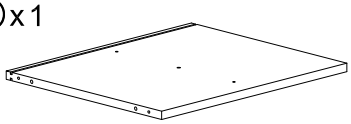	⑩ x 1 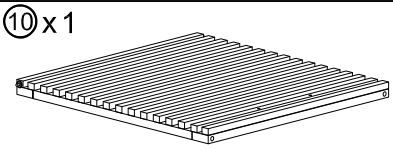
⑪ x 1 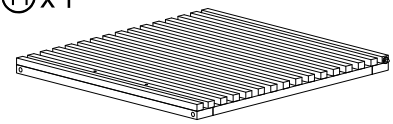	⑫ x 2 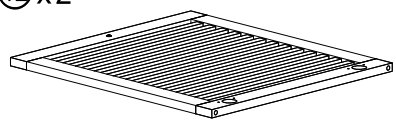	⑬ x 2 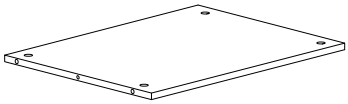
⑭ x 2 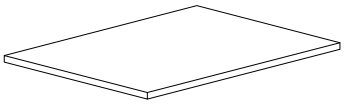	⑮ x 1 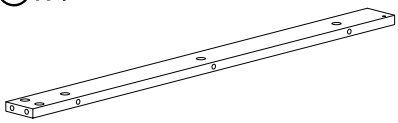	⑯ x 1 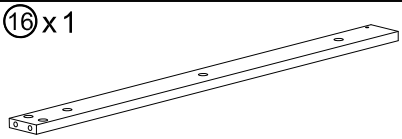
⑰ x 1 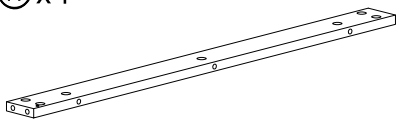	⑱ x 1 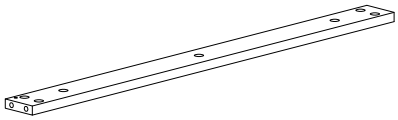	⑲ x 2 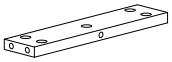
⑳ x 1 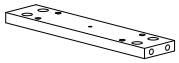	㉑ x 4 	㉒ x 1 
㉓ x 2 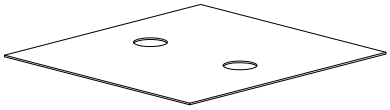	㉔ x 2 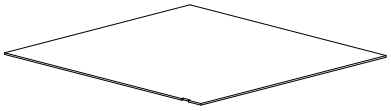	

Hardware

A x58	B x58	C x24	D x11	E x4	F x44
			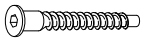		
Φ6x36mm	Φ15mm	Φ6x30mm	Φ7x48mm	M6x10mm	Φ3.5x12mm

G x4	H x2	J x2	K x16	L x1	M x2
		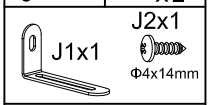 J1x1 J2x1 Φ4x14mm		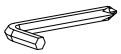	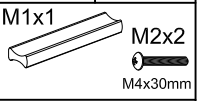 M1x1 M2x2 M4x30mm
Φ4x25mm	Φ4x35mm		15x10mm	4mm	140mm

N x2	P x2	Q x1	R x2	S x8	T x4
 N1x1 N2x1 M4x18mm	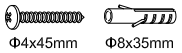 P1x1 P2x1 Φ4x45mm Φ8x35mm		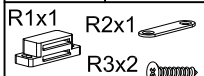 R1x1 R2x1 R3x2 Φ3x15mm		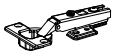
		Φ19mm		Φ5mm	

U x4	V x1	W x2	X x4	Y x18
		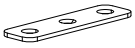		
	Φ6x60mm			Φ20mm

G x4	H x2
	
Φ4x25mm	Φ4x35mm

(DE) Bitte beachten Sie,dass die Formen der Schrauben G und H ähnlich sind.Bitte installieren Sie entsprechend der Anleitung und unterscheiden Sie sie

(UK) Please note that the shapes of screws G and H are similar.Please install according to the instructions and distinguish them!

(FR) Notez que les vis G et H ont des formes similaires.Veuillez les installer en suivant les instructions pour les séparer!

(IT) Si prega di notare che le forme delle viti G e H sono simili.Si prega di installarle seguendo le istruzioni e di distinguerle!

(ES) Por favor,tenga en cuenta que las formas de los tornillos G y H son similares.Por favor,instálelos de acuerdo con las instrucciones y distíngalos.

(NL) Let op,de vormen van schroeven G en H zijn vergelijkbaar.Installeer volgens de instructies en maak onderscheid tussen ze!

(SE) Observera att formerna pa skruvarna G och H är lika.Installera enligt anvisningarna och särskilj dem!

(PL) Zauważ, że kształty śrub G i H są podobne. Zainstaluj zgodnie z instrukcjami i rozróżnij je!

1

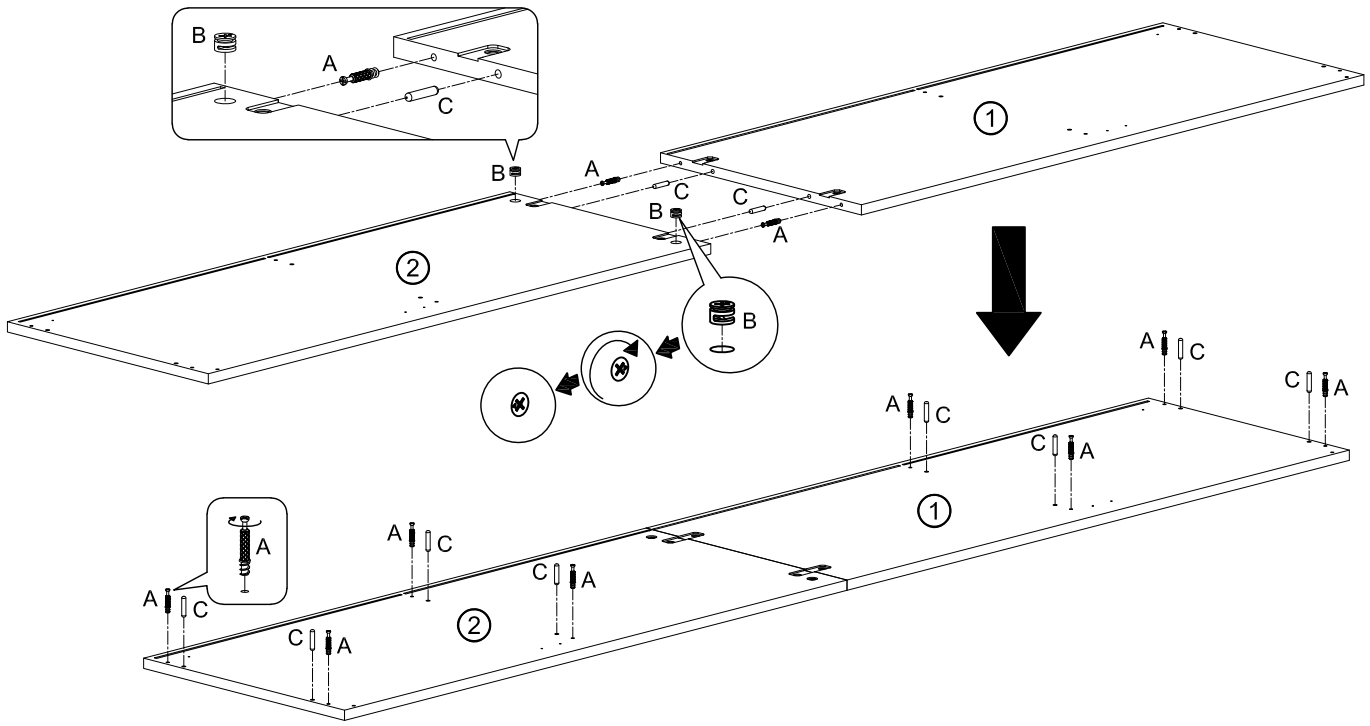

A	x10
Φ6x36mm	

B	x2
Φ15mm	

C	x10
Φ6x30mm	

2

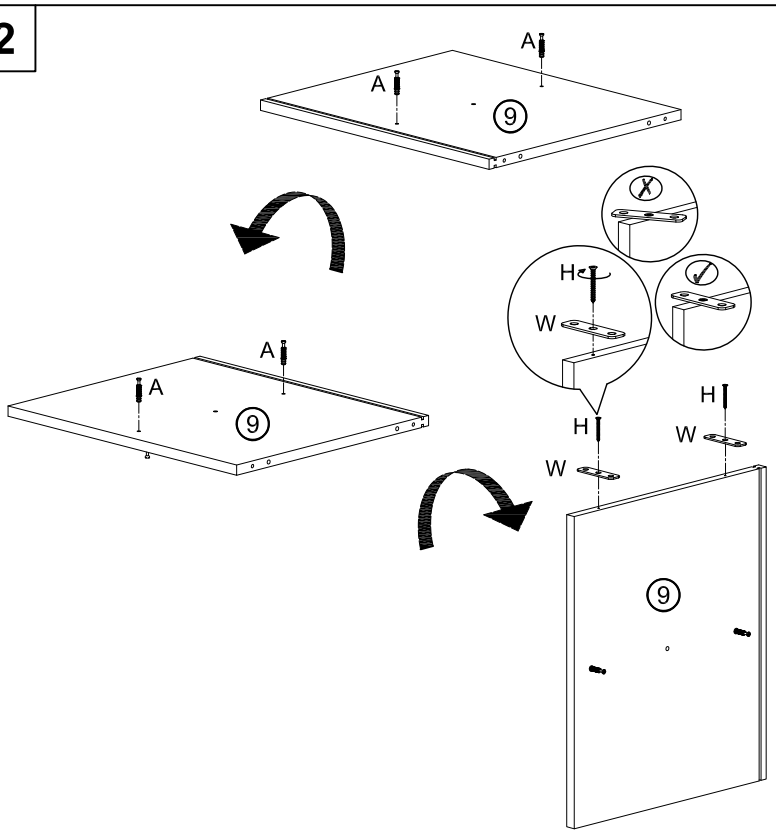

A	x4
Φ6x36mm	

H	x2
Φ4x35mm	

W	x2

3

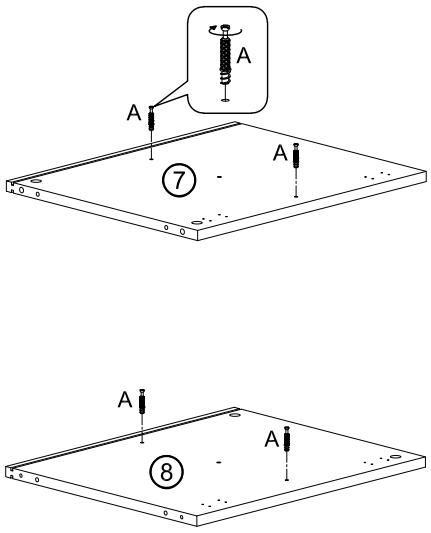

A	x4
Φ6x36mm	

4

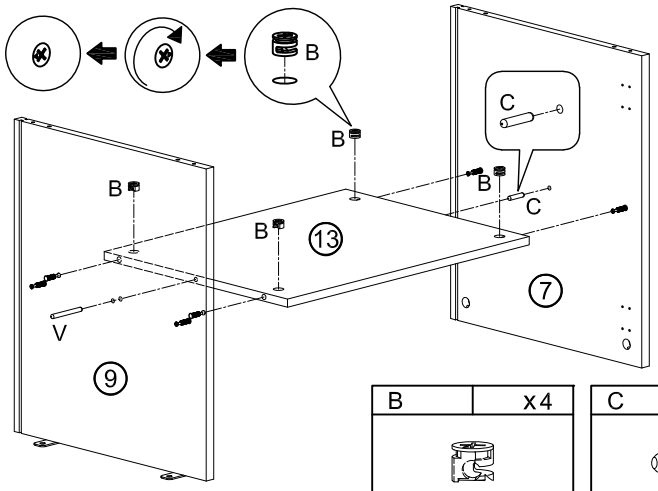

B	x4
Φ15mm	

C	x1
Φ6x30mm	

V	x1
Φ6x60mm	

5

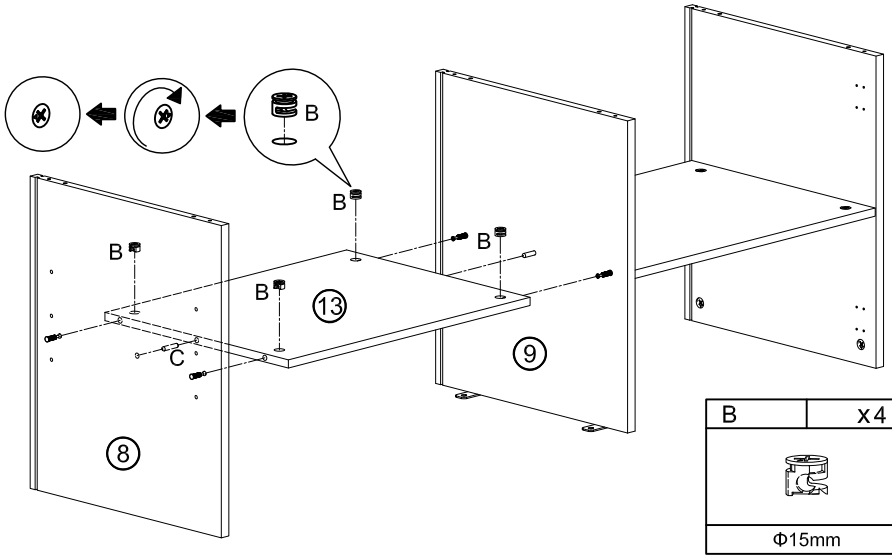

B	x4
Φ15mm	

C	x1
Φ6x30mm	

6

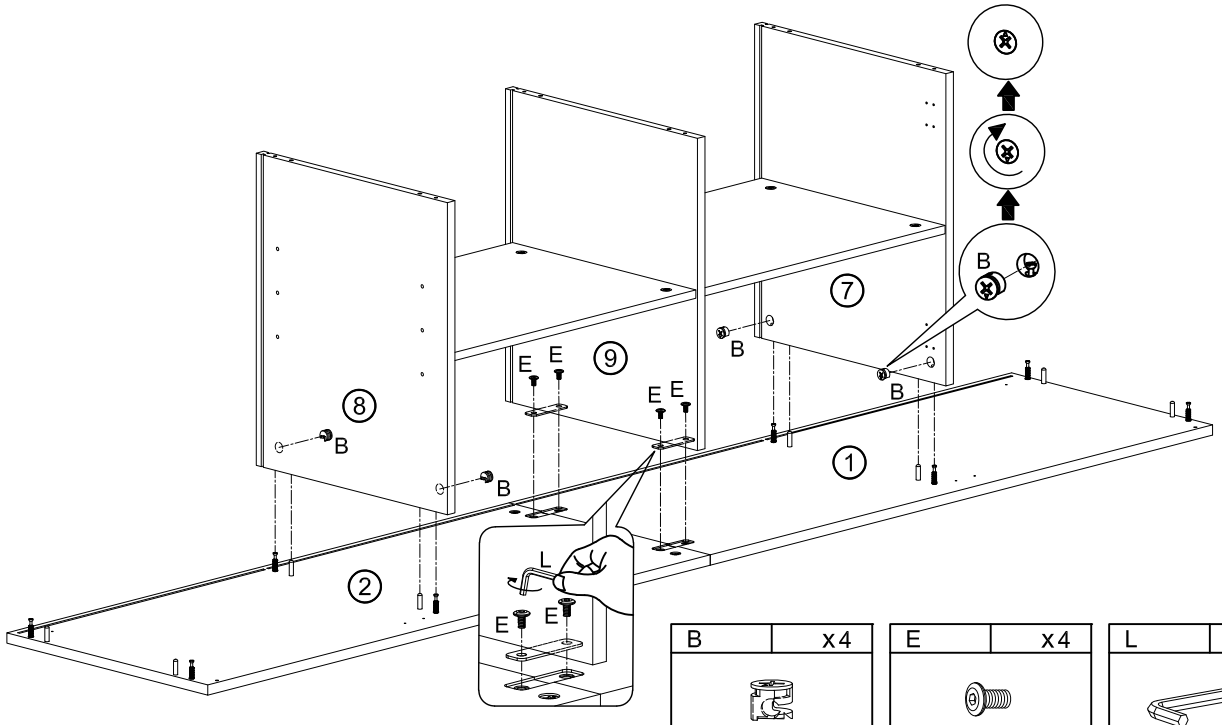

B	x4
Φ15mm	

E	x4
M6x10mm	

L	x1
4mm	

7

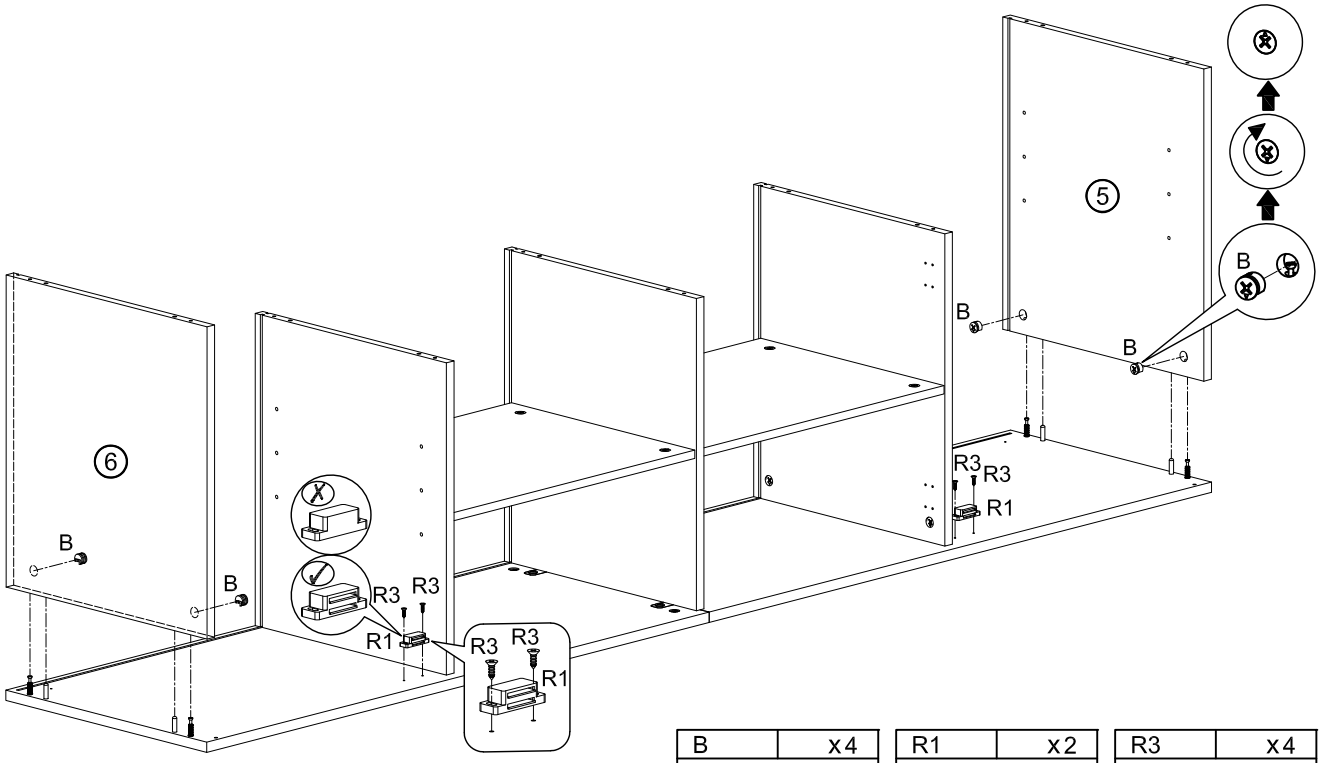

B	x4
	
Φ15mm	

R1	x2
	

R3	x4
	
Φ3x15mm	

8

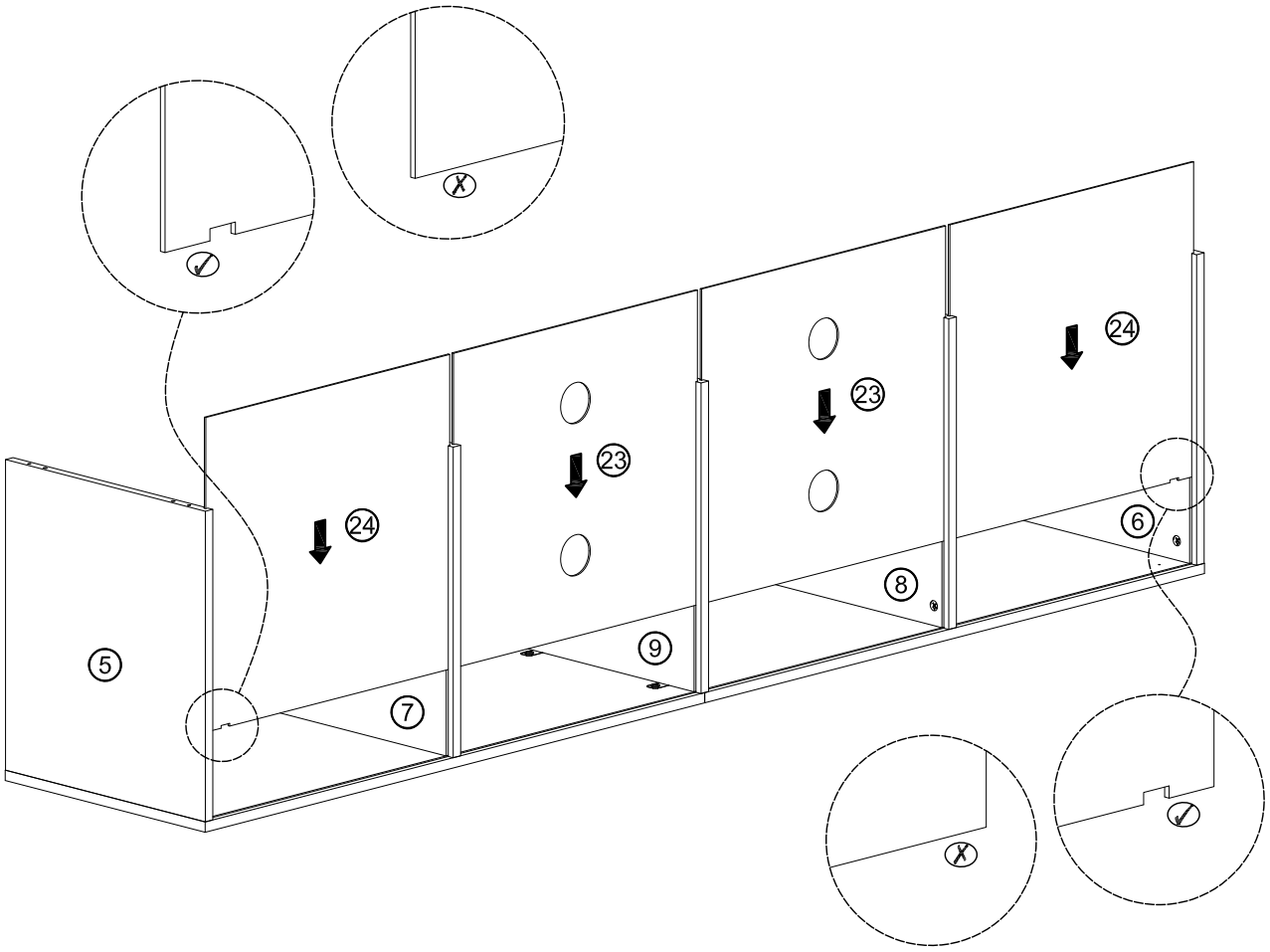

9

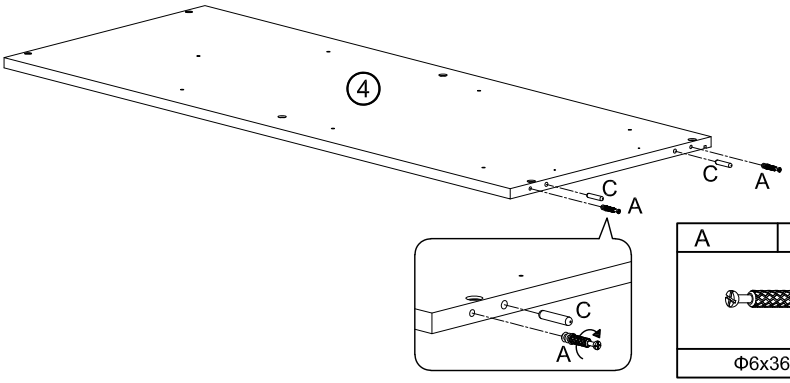

A	x2
Φ6x36mm	

C	x2
Φ6x30mm	

10

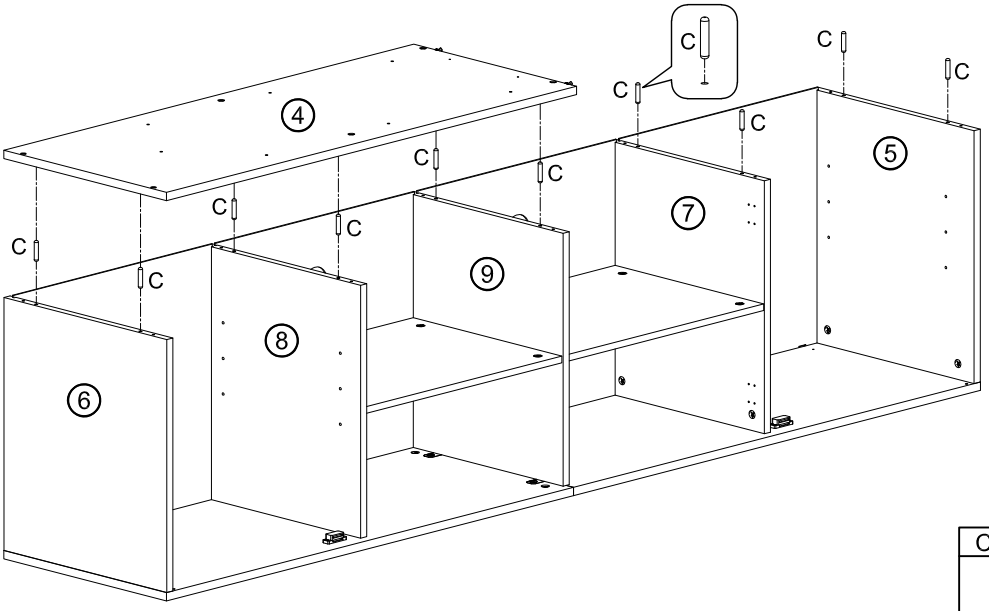

C	x10
Φ6x30mm	

11

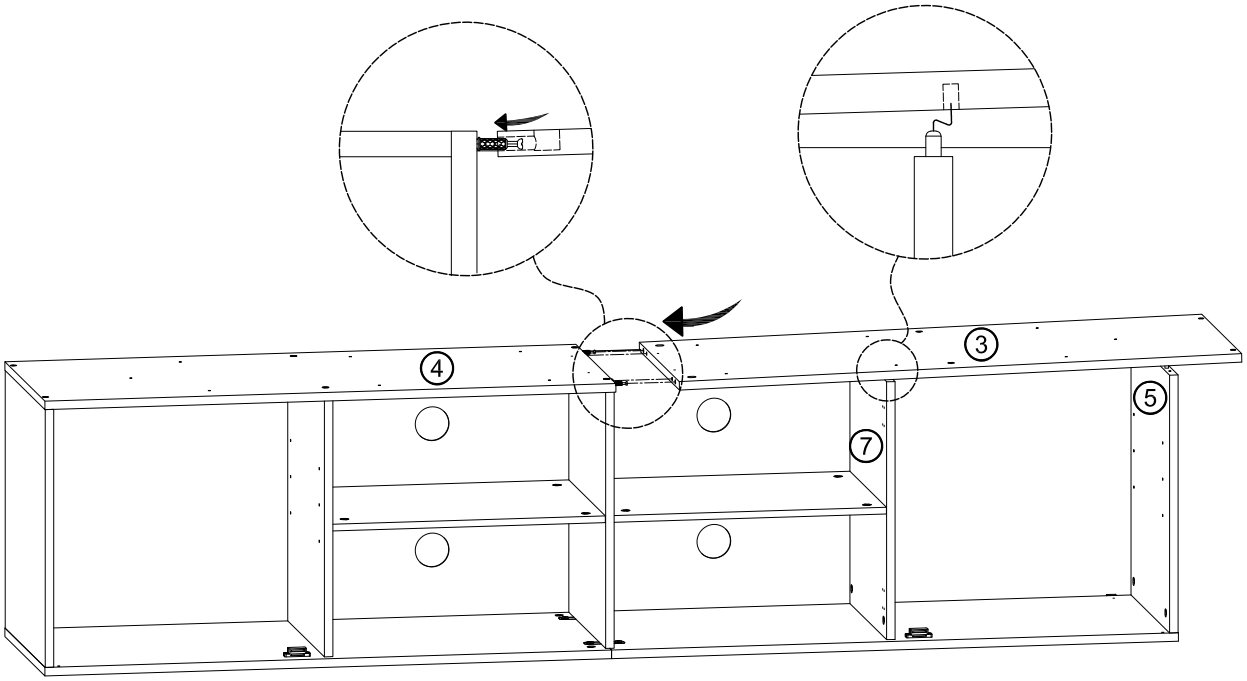

12

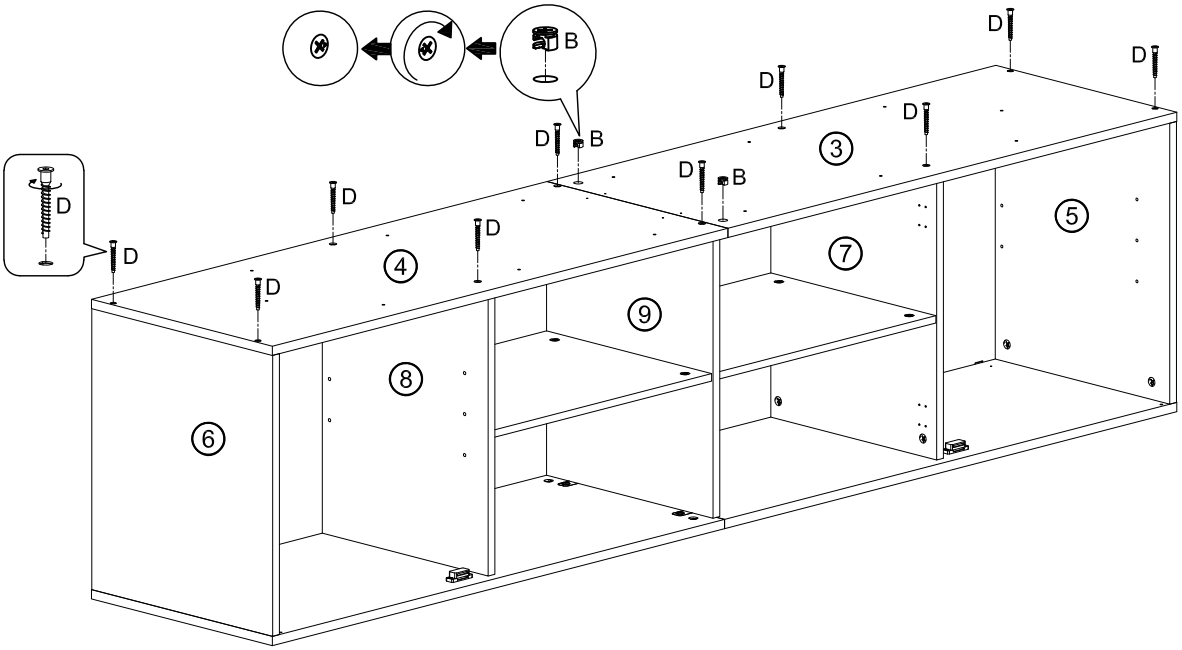

D	x10
	
Φ7x48mm	

B	x2
	
Φ15mm	

13

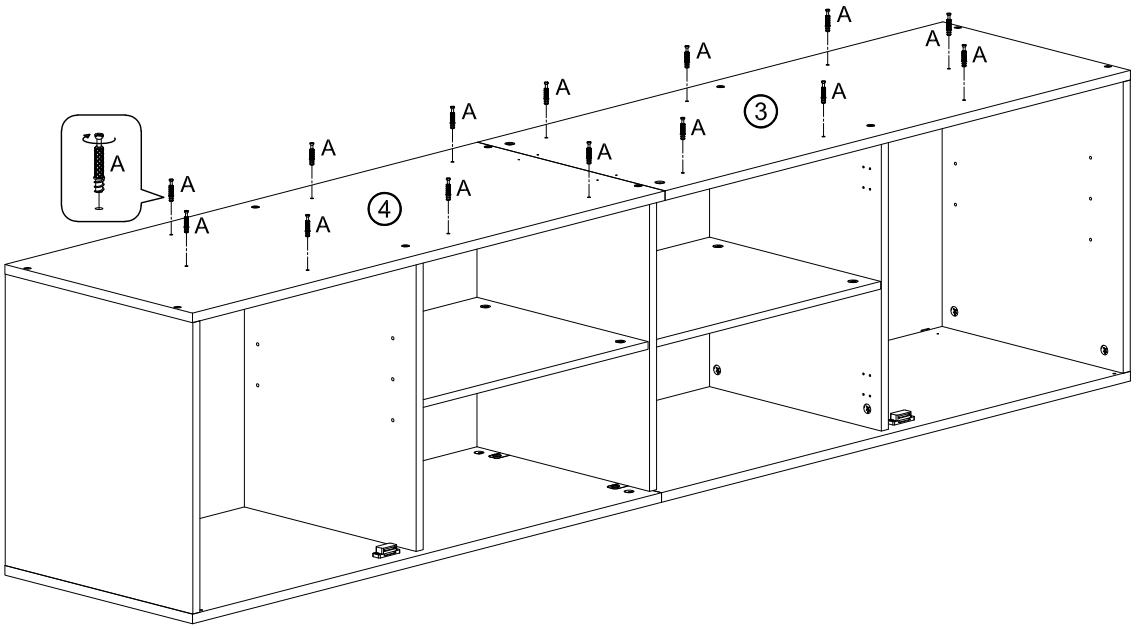

A	x14
	
Φ6x36mm	

14

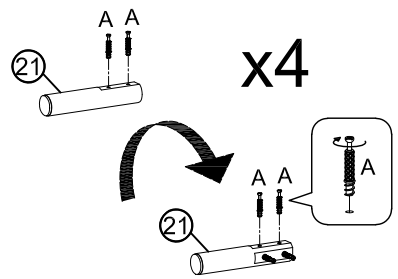

A	x16
	
Φ6x36mm	

15

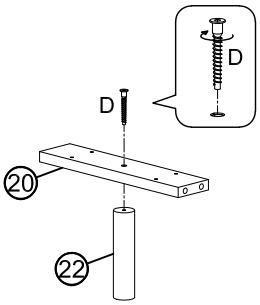

D	x1
	
Φ7x48mm	

16

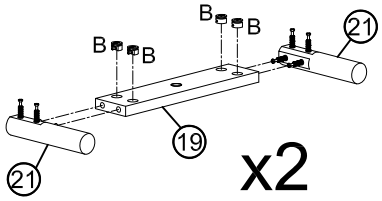

B	x8
	
Φ15mm	

17

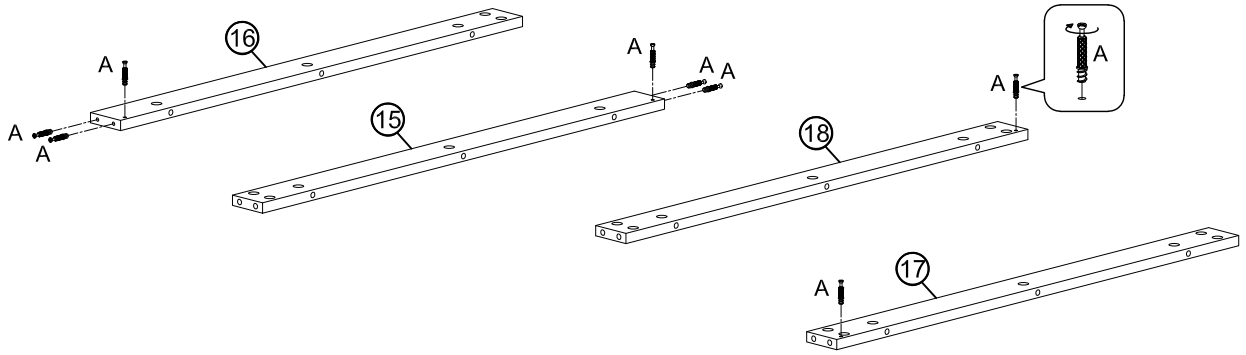

A	x8
	
Φ6x36mm	

18

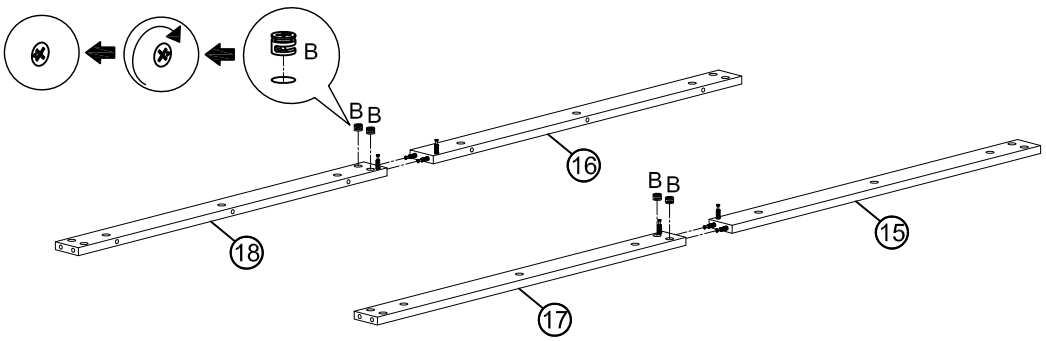

B	x4
	
Φ15mm	

19

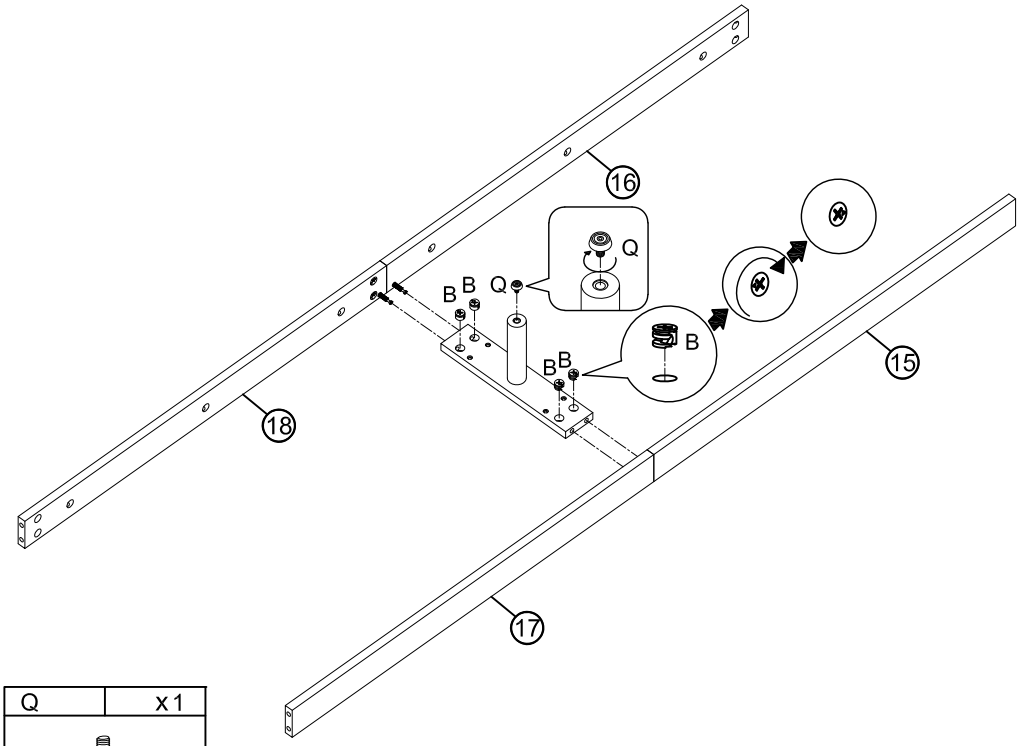

B	x4
Φ15mm	

Q	x1
Φ19mm	

20

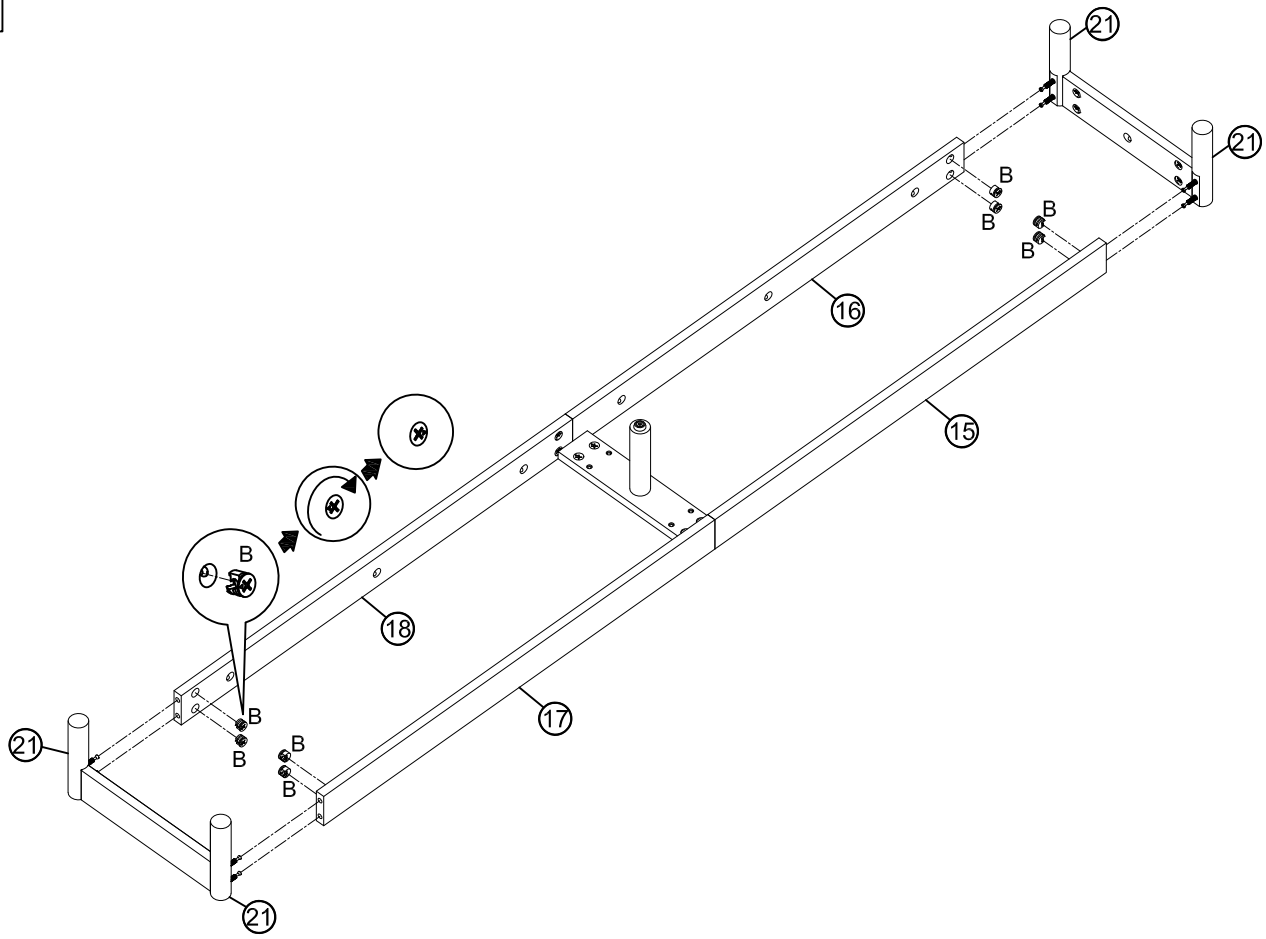

B	x8
Φ15mm	

21

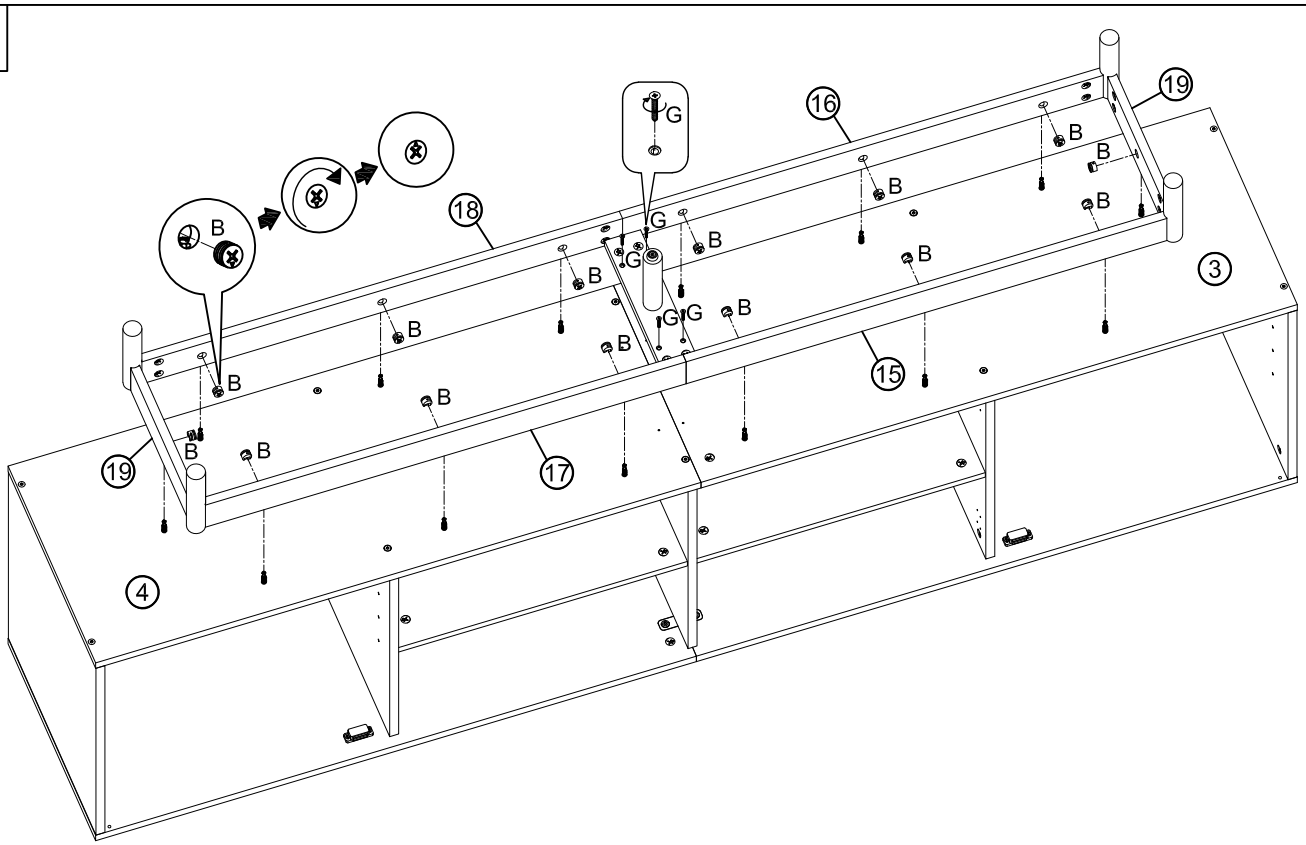

B	x 14
	
Φ15mm	

G	x 4
	
Φ4x25mm	

22

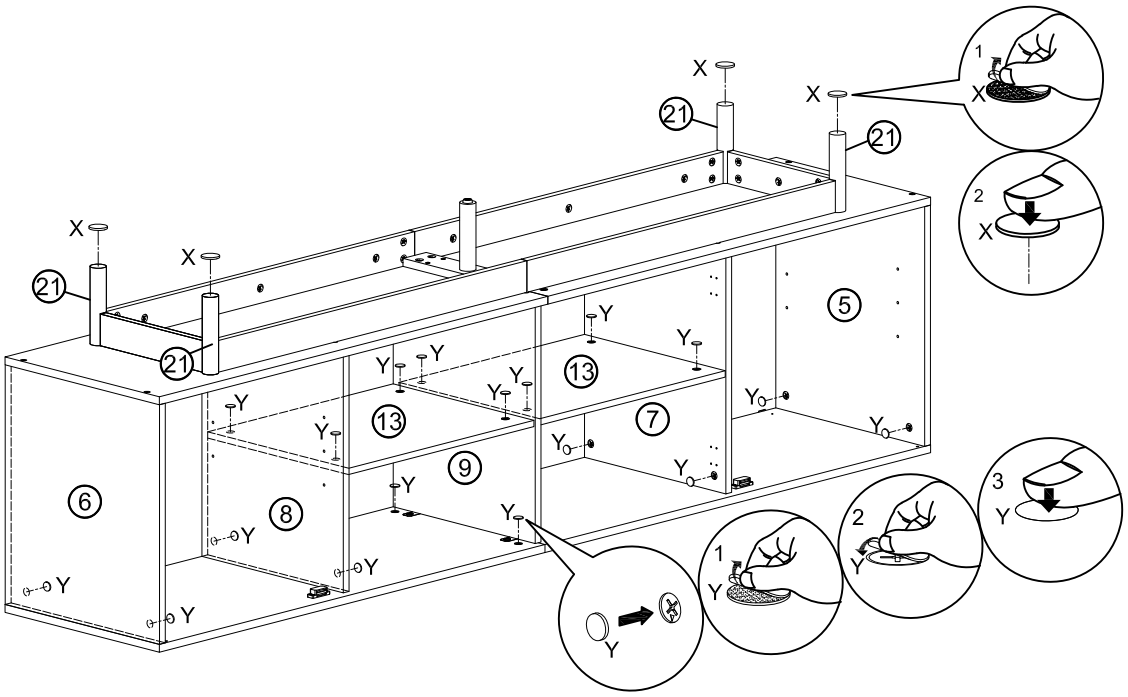

X	x 4
	

Y	x 18
	
Φ20mm	

23

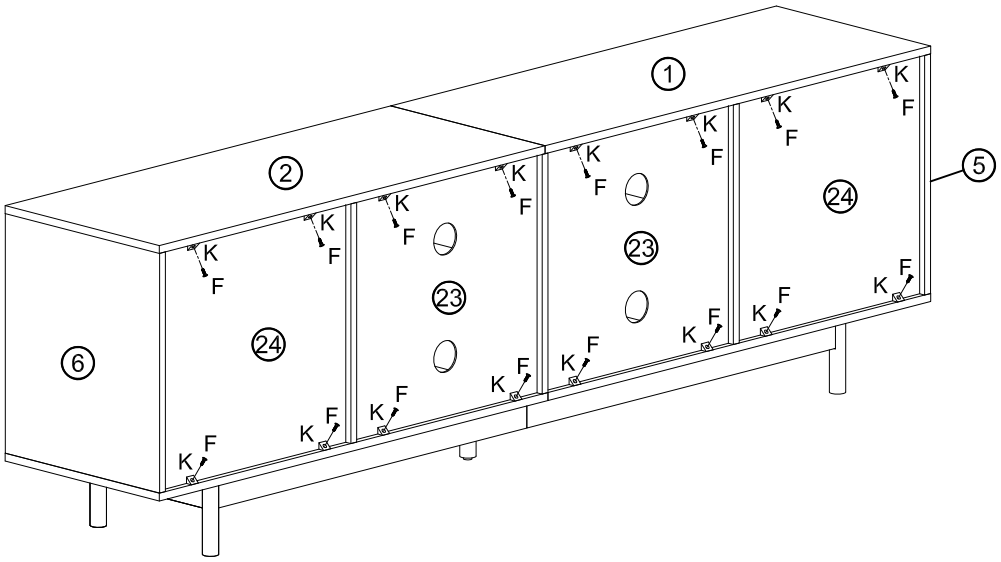

F	x16
Φ3.5x12mm	

K	x16
15x10mm	

24

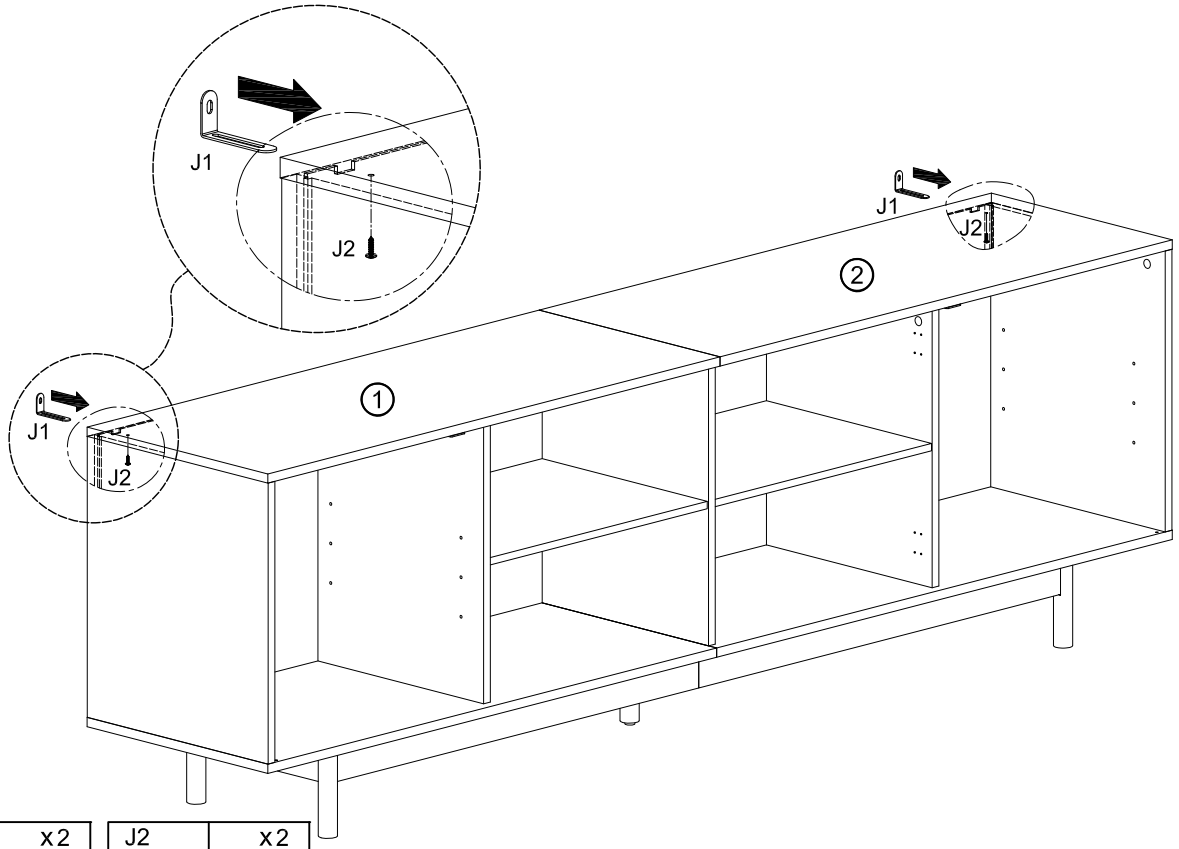

J1	x2

J2	x2
Φ4x14mm	

25

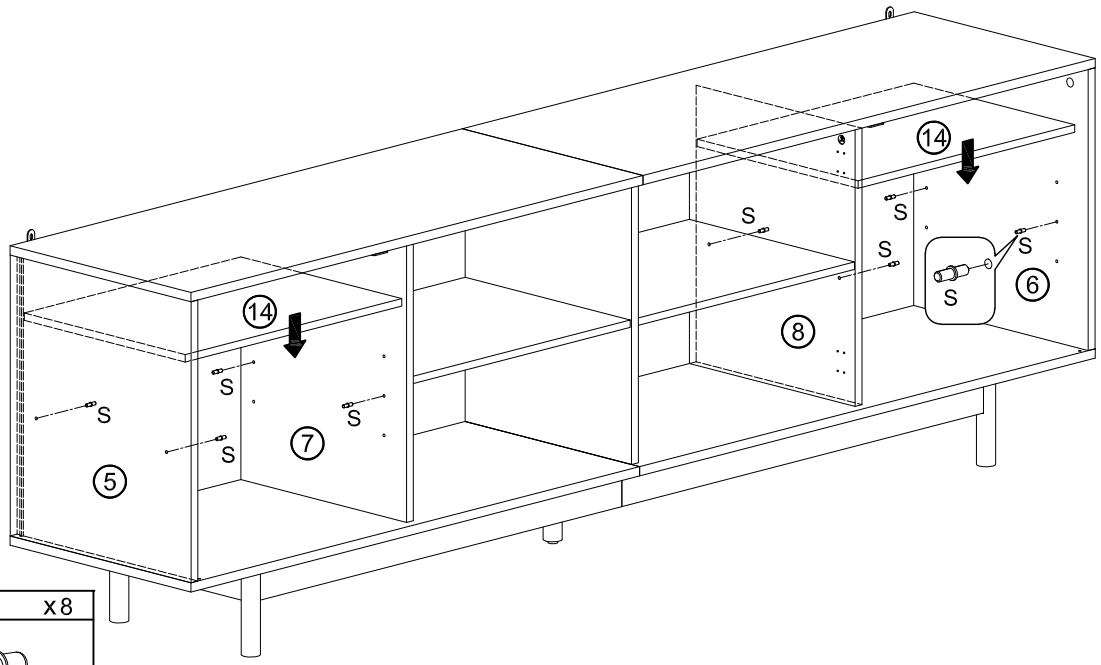

S	x8
	
Φ5mm	

26

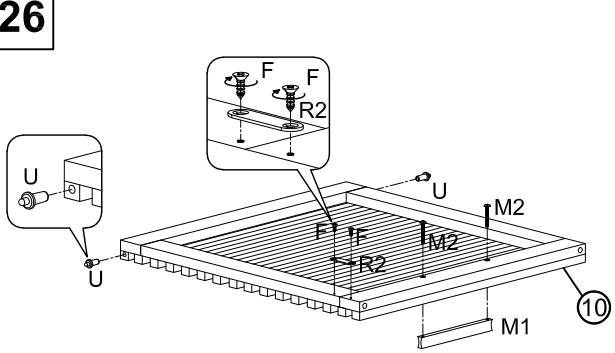

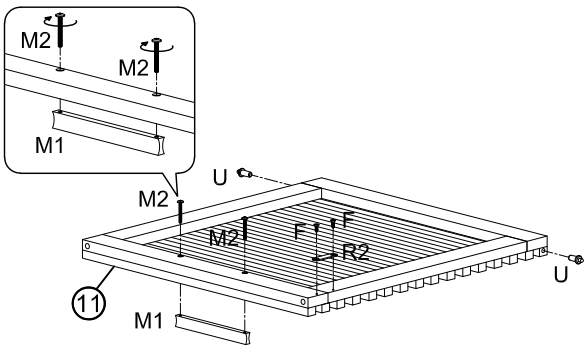

F	x4
	
Φ3.5x12mm	

M1	x2
	
140mm	

M2	x4
M4x30mm	

R2	x2
	

U	x4
	

27

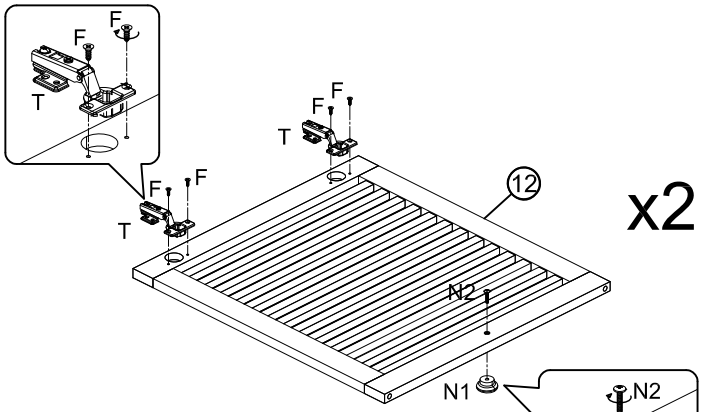

x2

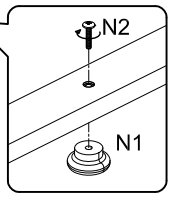

F	x8
	
Φ3.5x12mm	

T	x4
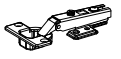	

N1	x2
	

N2	x2
	
M4x18mm	

28

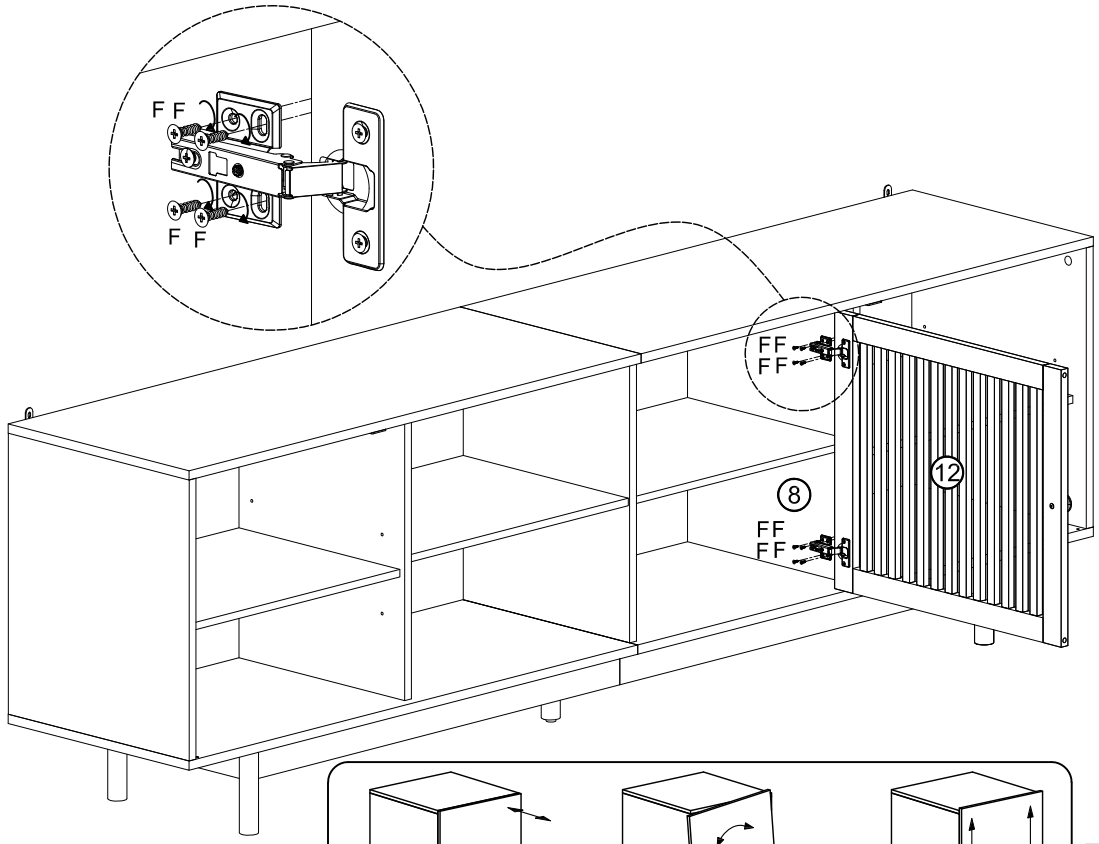

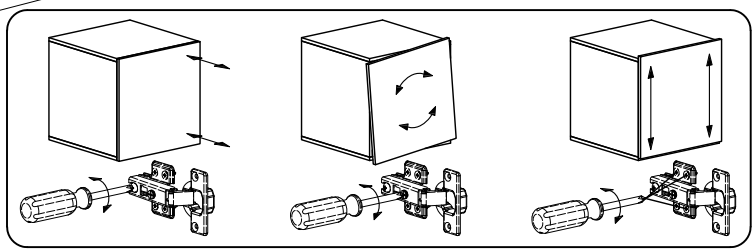

F	x8
Φ3.5x12mm	

29

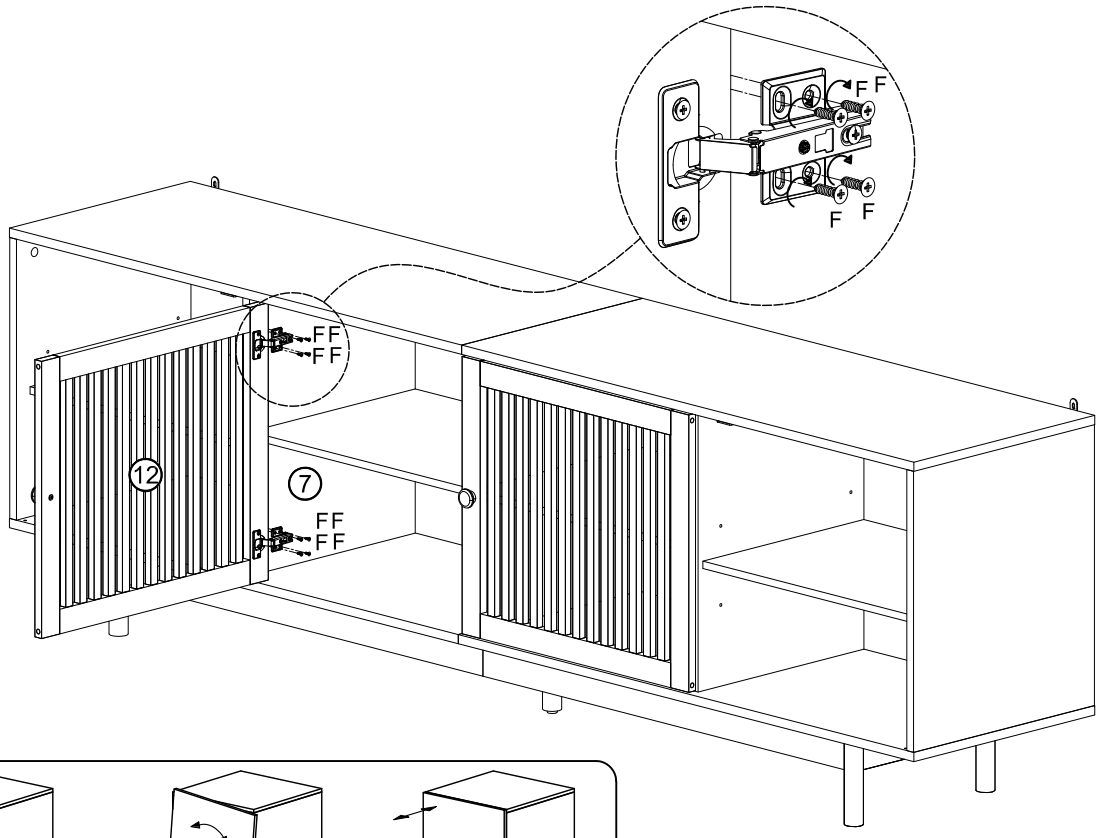

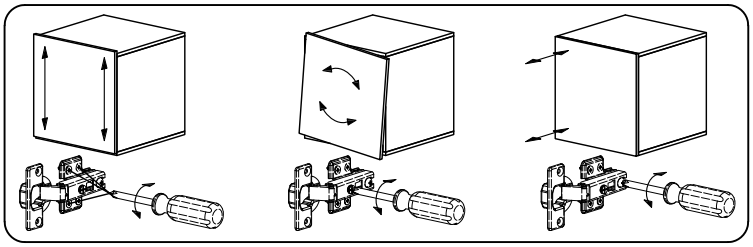

F	x8
Φ3.5x12mm	

30

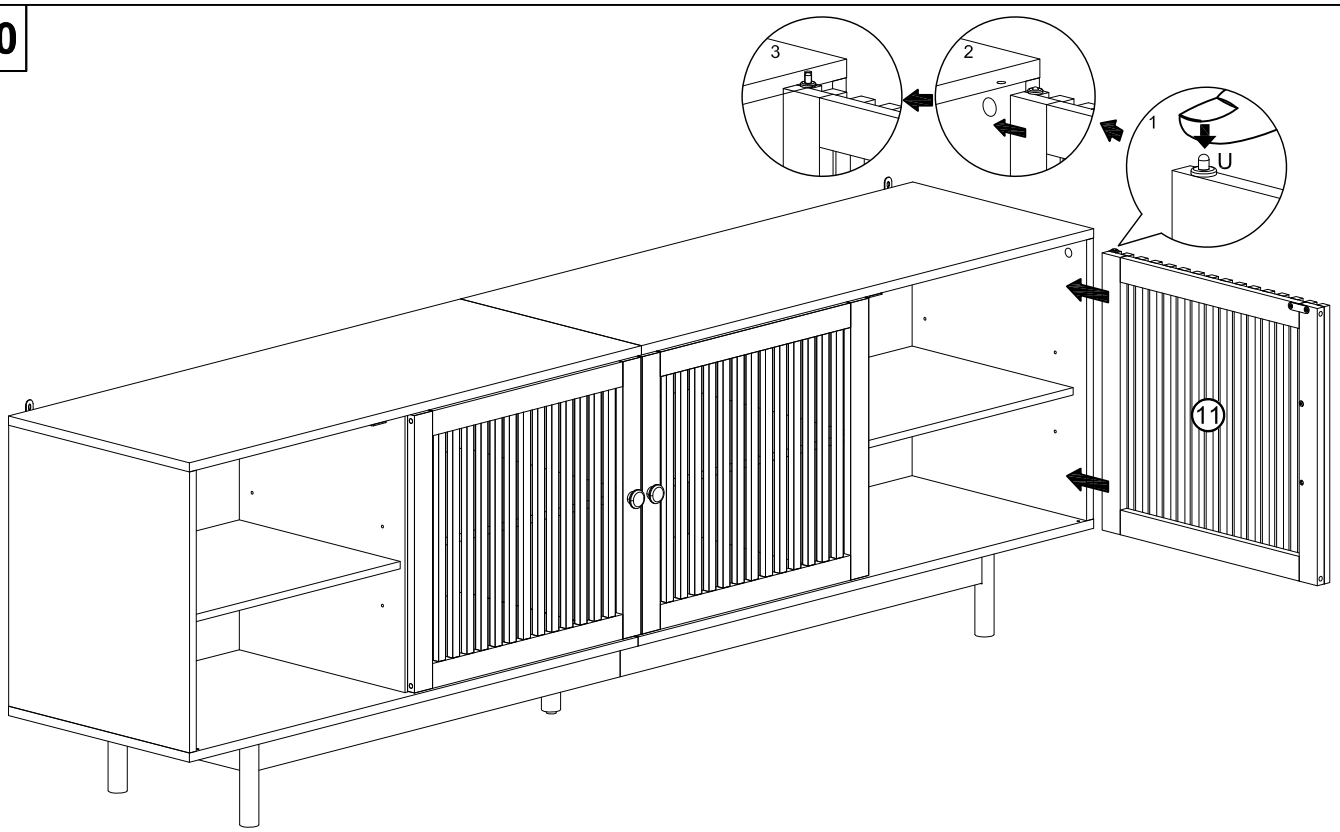

31

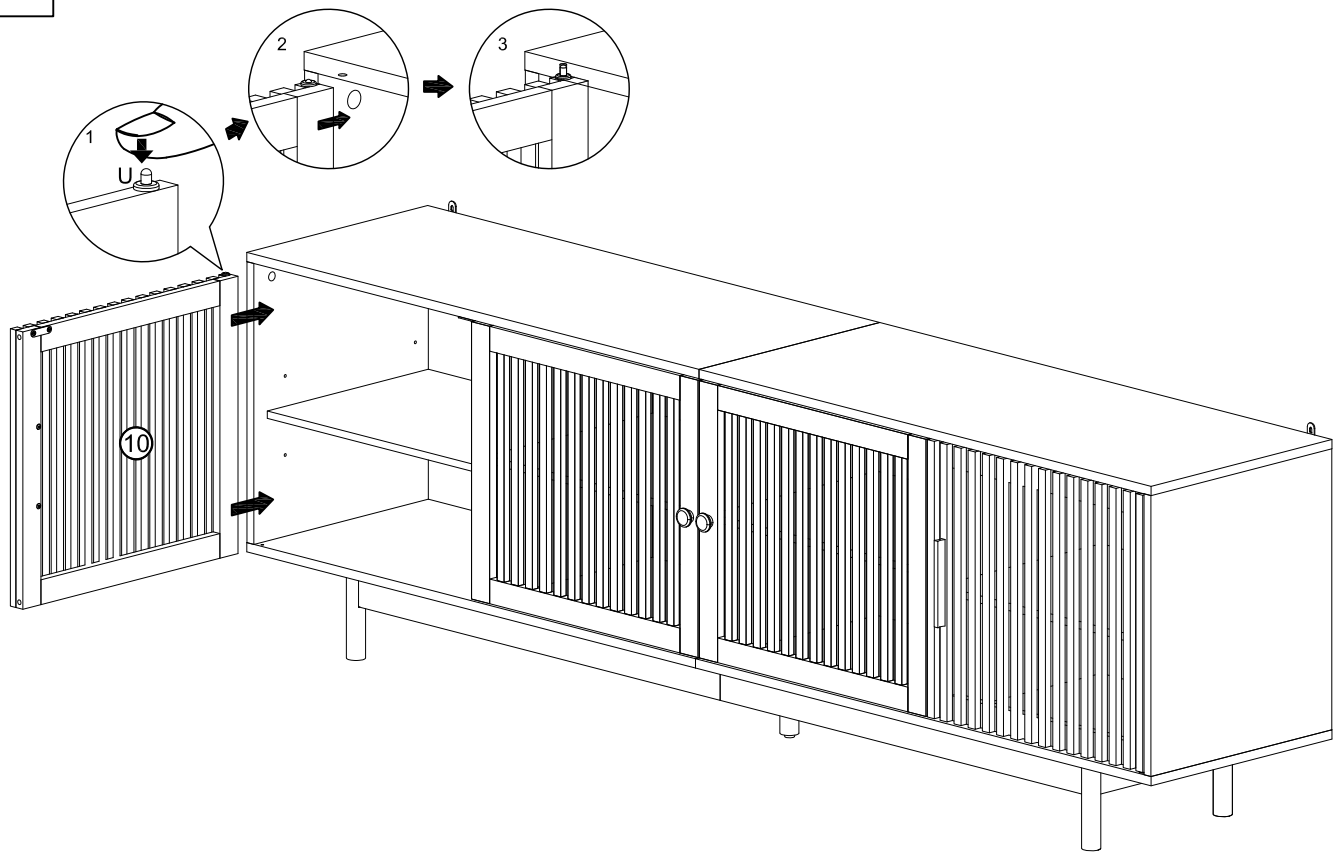

32

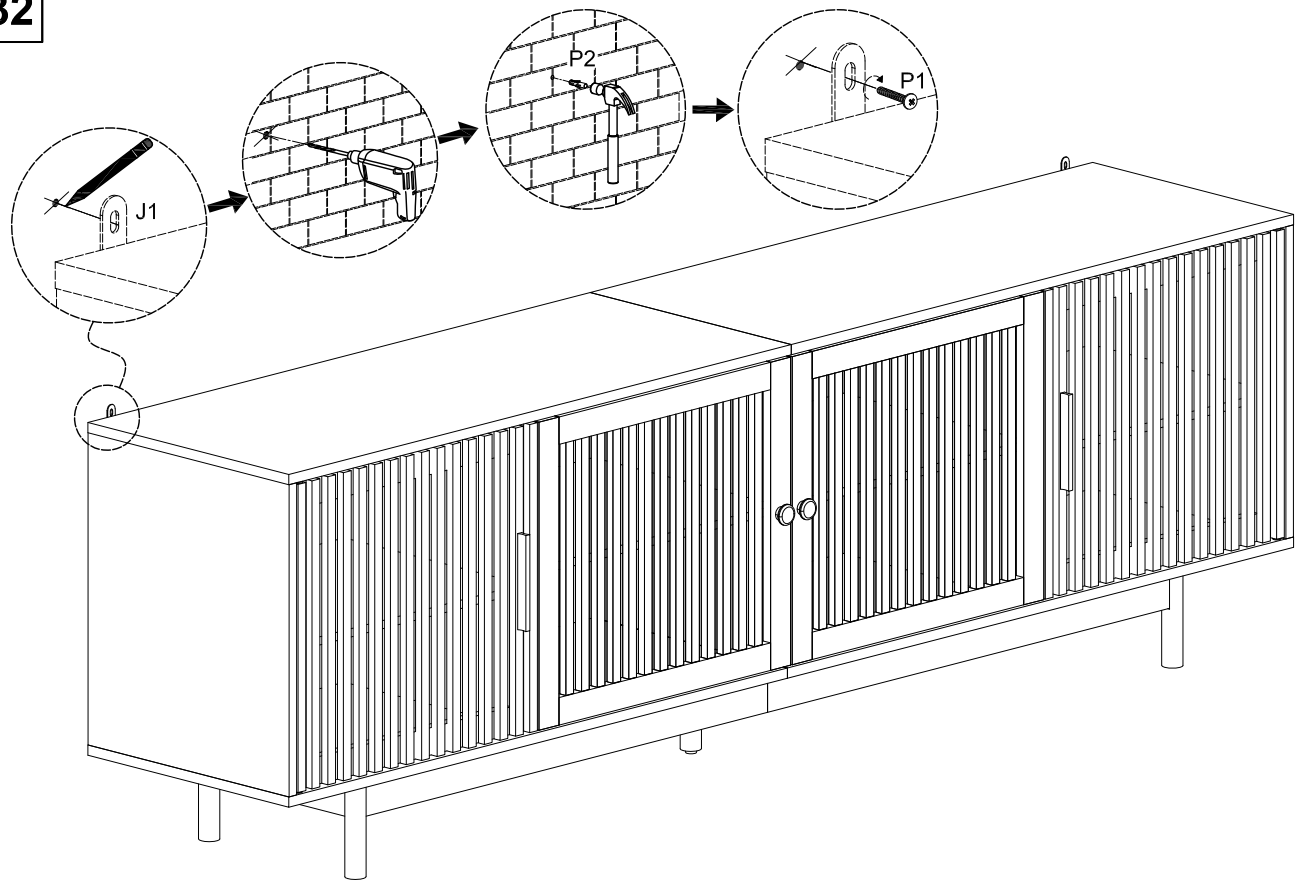

P1	x2
	
Φ4x45mm	

P2	x2
	
Φ8x35mm	

33

