Regina Andrew

DETROIT

SPECIFICATION SHEET

Juliet Crystal Table Lamp Large
13-1283

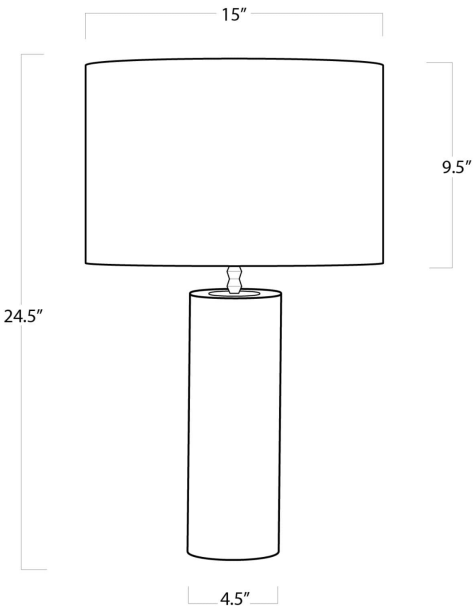

HEIGHT	24.5
WIDTH	15
DEPTH	15
SHADE DIMS	15 x 15 x 9.5
SHADE COLOR	Natural Linen
BULB QTY	1
BULB TYPE	A Type Medium Base (E26)
SOCKET	E26 3-Way Cast Turn Knob
WATTAGE	3-Way 150 Watt Max
WIRING TYPE	French Wire
MATERIAL	Crystal
FINISH	N/A
NOTES	8 ft of cord
FREIGHT ONLY	No