STEP 2 3

PART	NO.	QTY.
	K812-6L	6
	K812-6R	6
	K812-6M	6
	F2	54

The width of K812-6M is smaller. Insert it into K812-6L and align the holes.

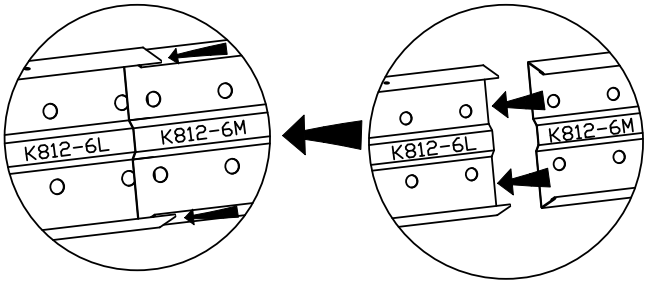

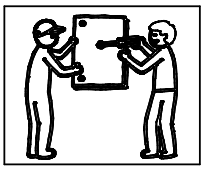

This step requires two people to complete the installation together.

Note: The small holes for connecting the crossbeam should all face upwards. These small holes are the installation holes for the top cover plate.

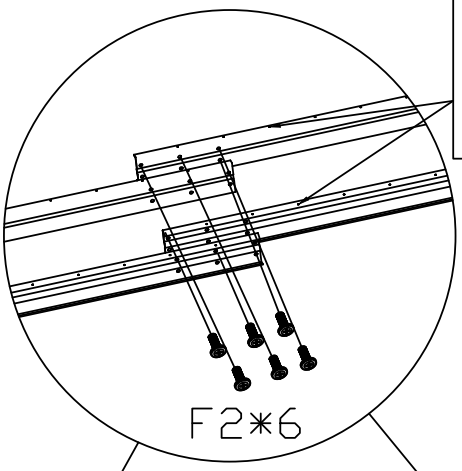

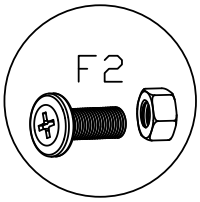

3 groups

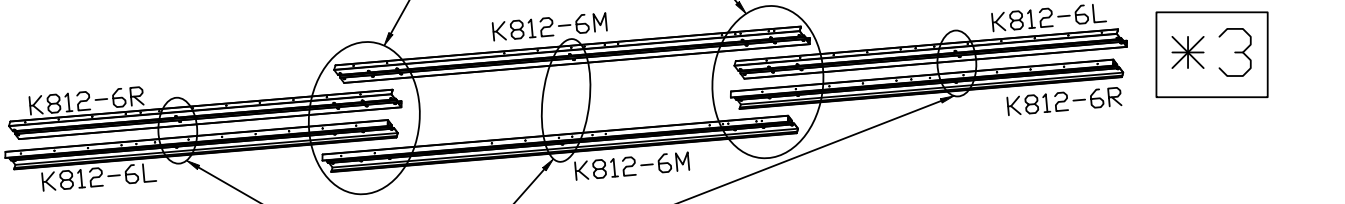

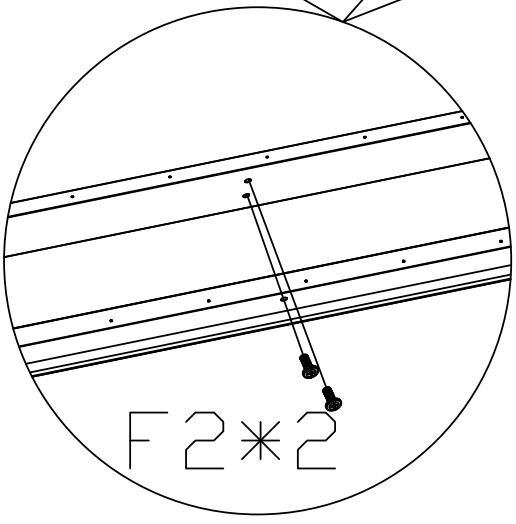

The width of K812-6M is smaller. Insert it into K812-6R and align the holes.

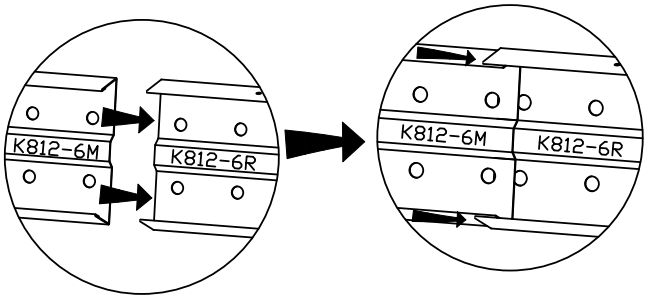

STEP 24

PART	NO.	QTY
	F2	12

This step requires two people to complete the installation together.

STEP 25

PART	NO.	QTY
	F1209-7L	1
	F1	6
	V2	6

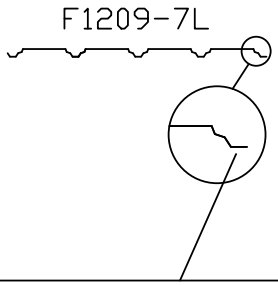

This is the installation of flat edges and F1209-8,otherwise, there will be interference phenomena.

Install according to the diagram:
The edge extends outward by about 50mm.

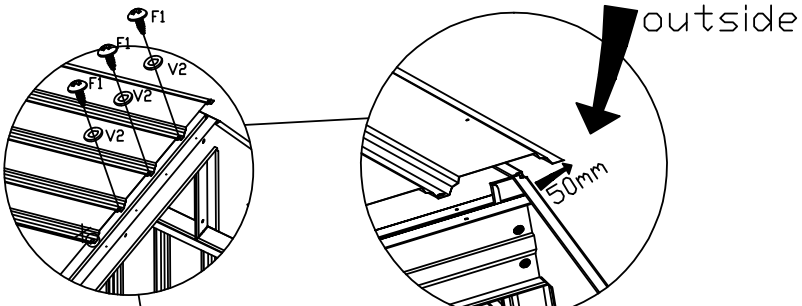

Pay attention to the installation dimensions of the top cover plate.

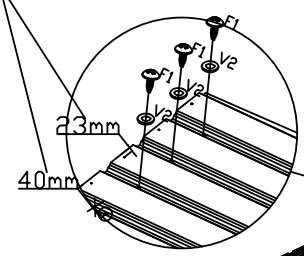

Attention: There are small holes on the outside for assembly with F1209-8.

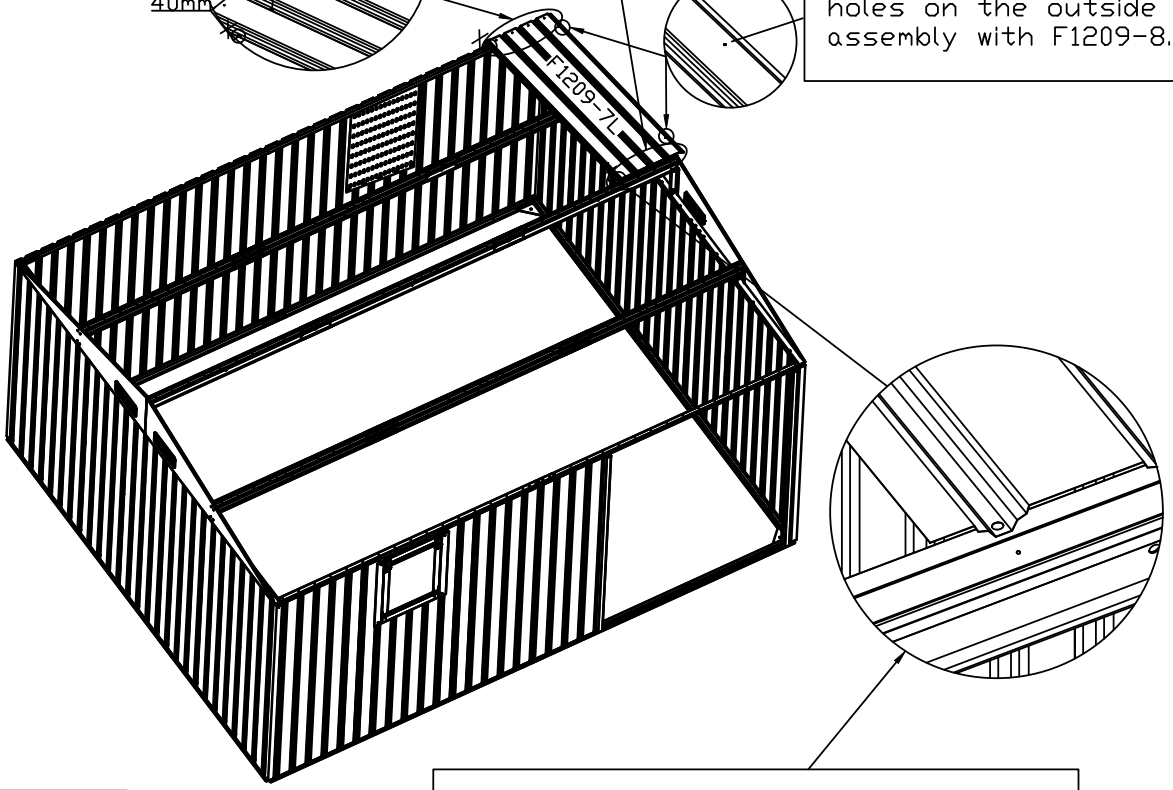

Dot not add screws that indicated with an X in diagram These need to be left undone.

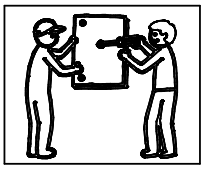

This step requires two people to complete the installation together.

STEP 26

PART	NO.	QTY
	F1209-7M	6
	F1209-7R	1
	F1209-7MM	1
	F1	68
	V2	68

This is the installation of flat edges and F1209-8 otherwise, there will be interference phenomena.

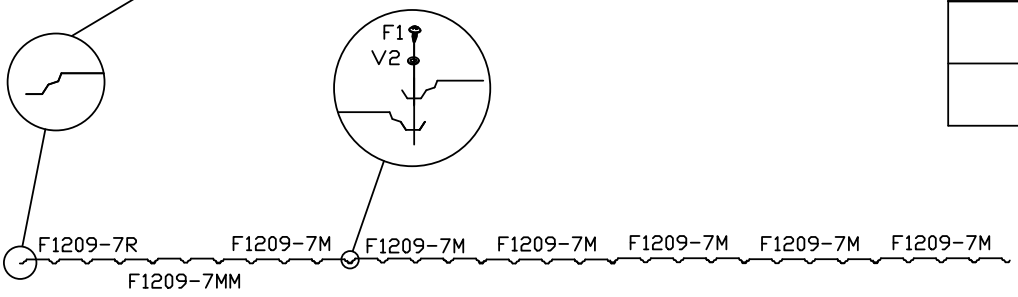

Pay attention to the installation dimensions of the top cover plate.

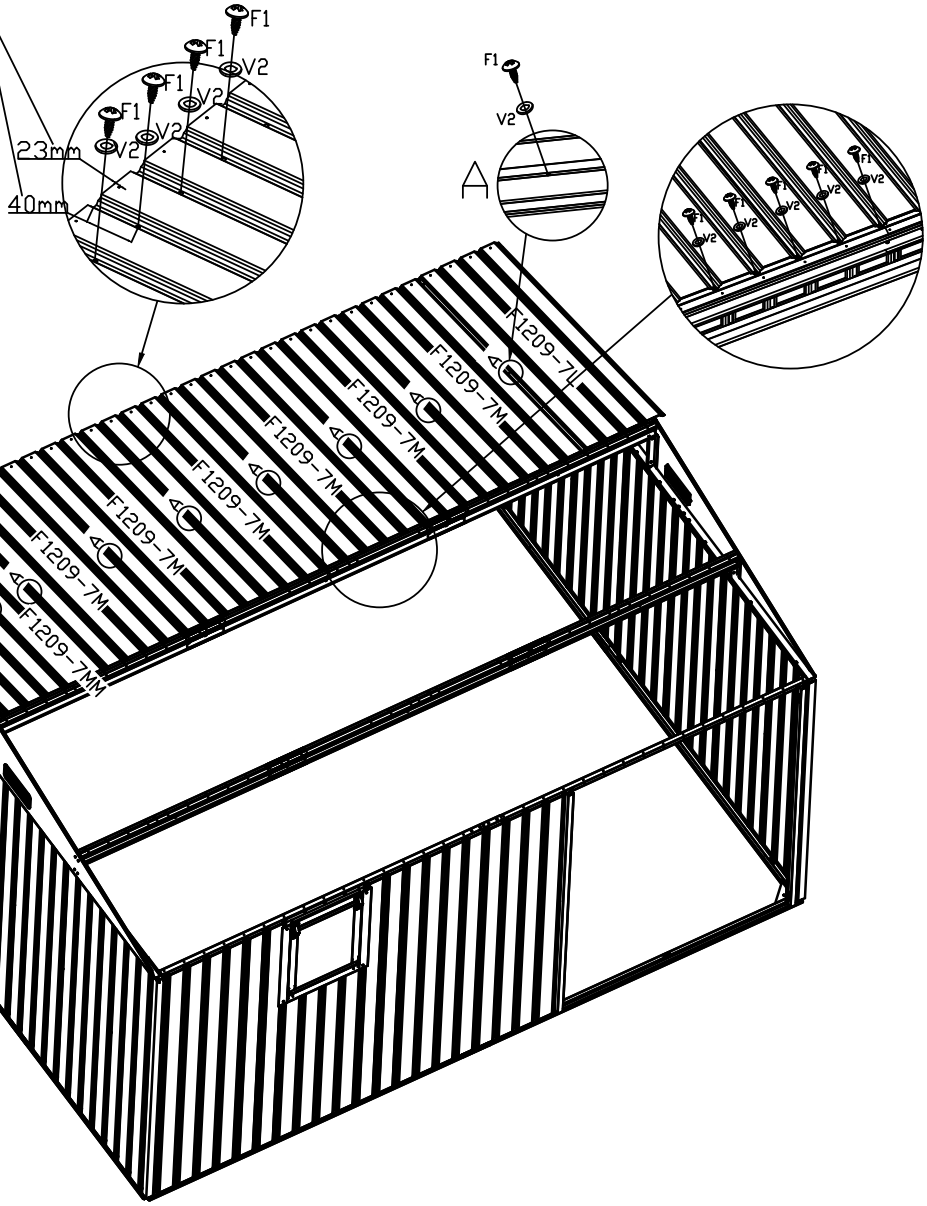

Attention: There are small holes on the outside for assembly with F1209-8.

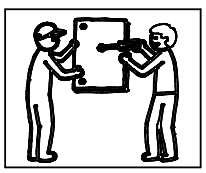

This step requires two people to complete the installation together.

STEP 27

PART	NO.	QTY
	F1209-7L	1
	F1209-7M	6
	F1209-7R	1
	F1209-7MM	1
	F1	74
	V2	74

This is the installation of flat edges and F1209-8 otherwise, there will be interference phenomena.

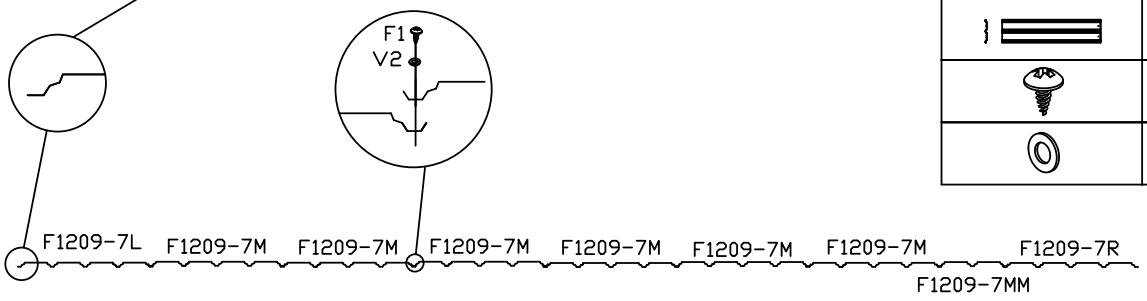

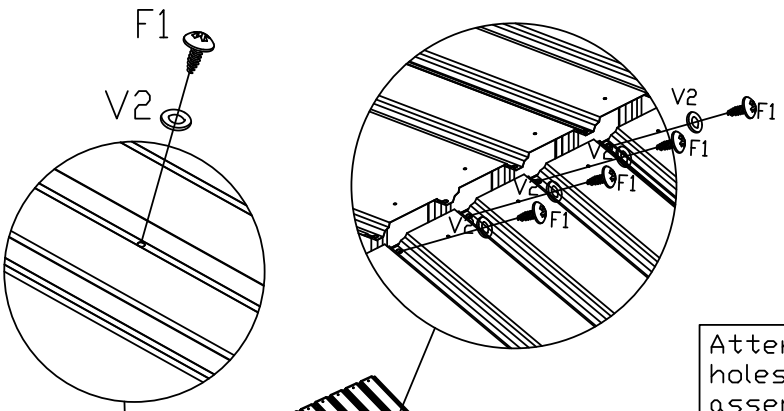

Attention: There are small holes on the outside for assembly with F1209-8.

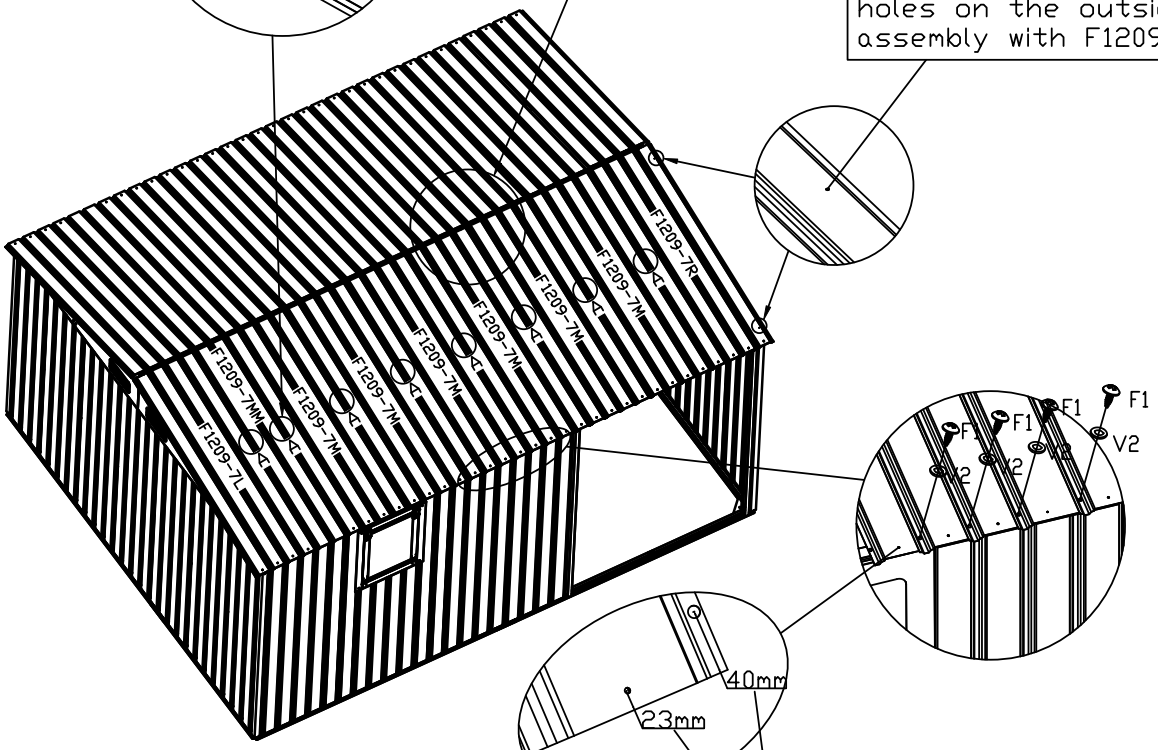

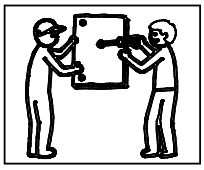

This step requires two people to complete the installation together.

Pay attention to the installation dimensions of the top cover plate.

STEP 2 8

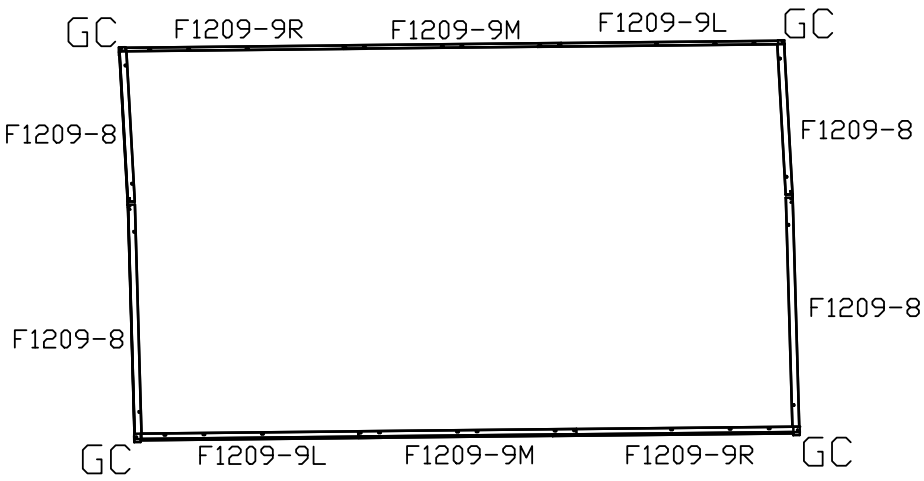

PART	NO.	QTY
	F1209-8	4
	F1209-9L	2
	F1209-9M	2
	F1209-9R	2
	GC	4
	F1	36
	V2	36

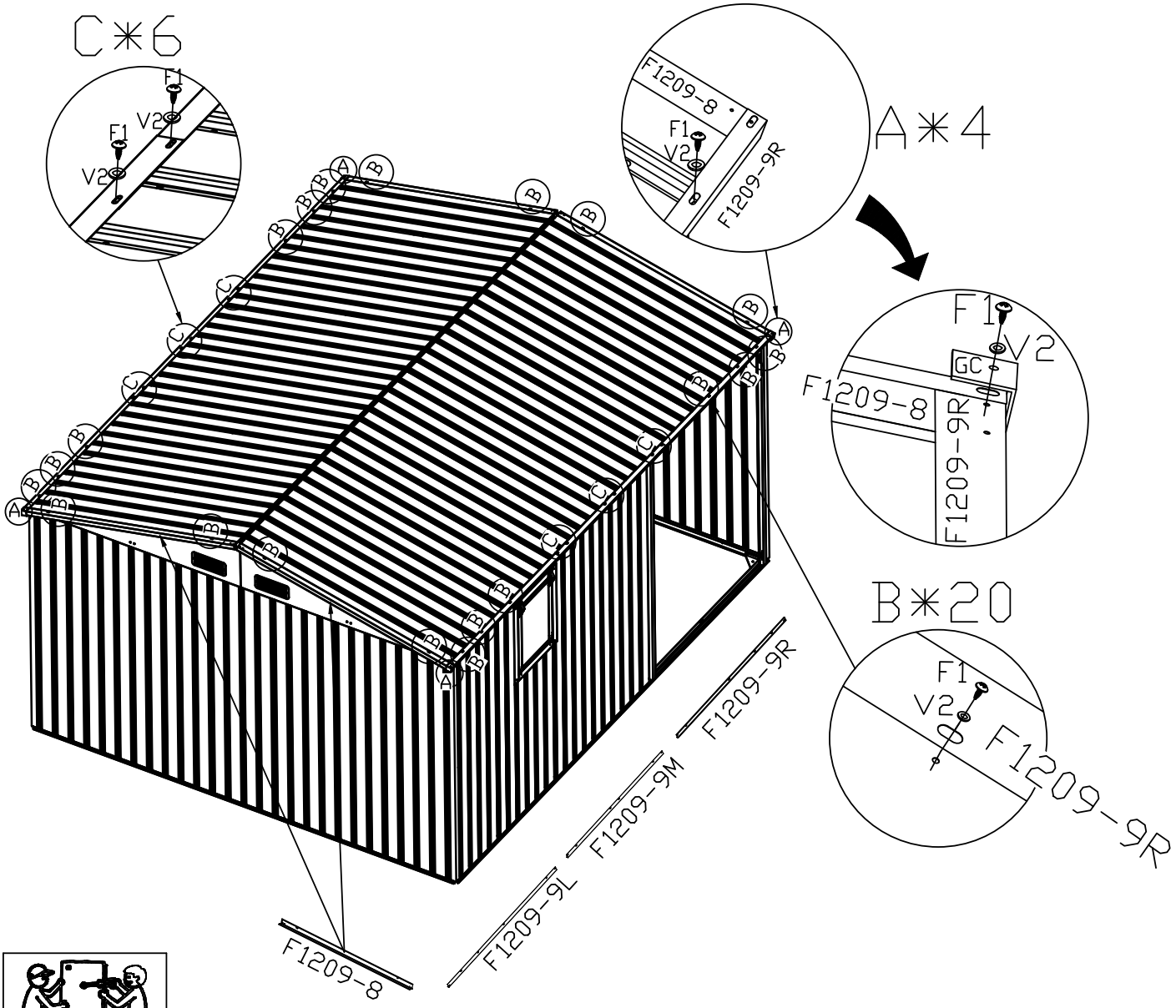

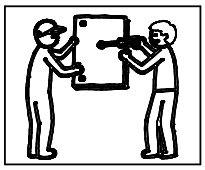

This step requires two people to complete the installation together.

STEP 2 9

PART	NO.	QTY
	K812-10	2
	K812-10M	1
	F1	8
	V2	8

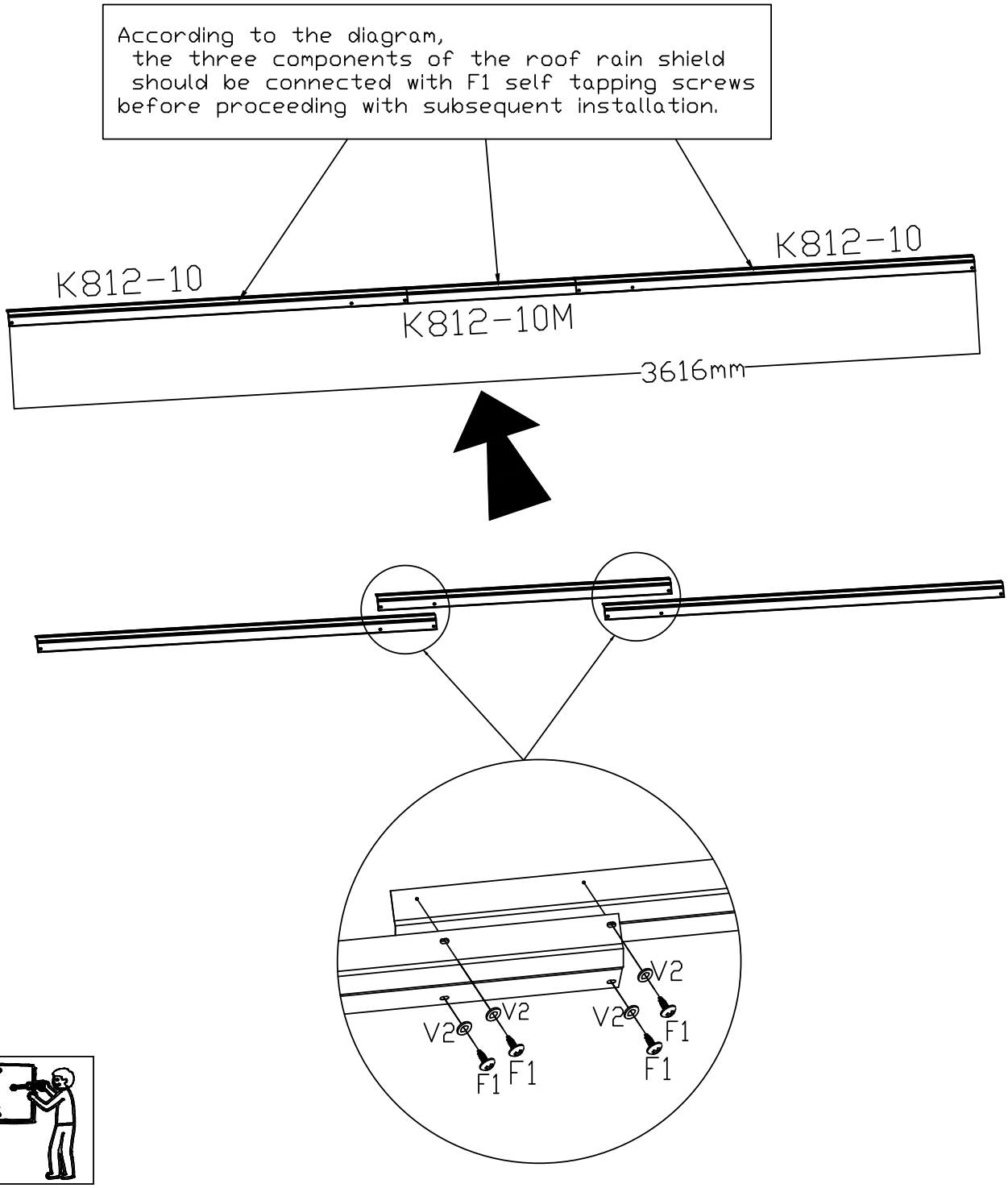

This step requires two people to complete the installation together.

STEP 3 0

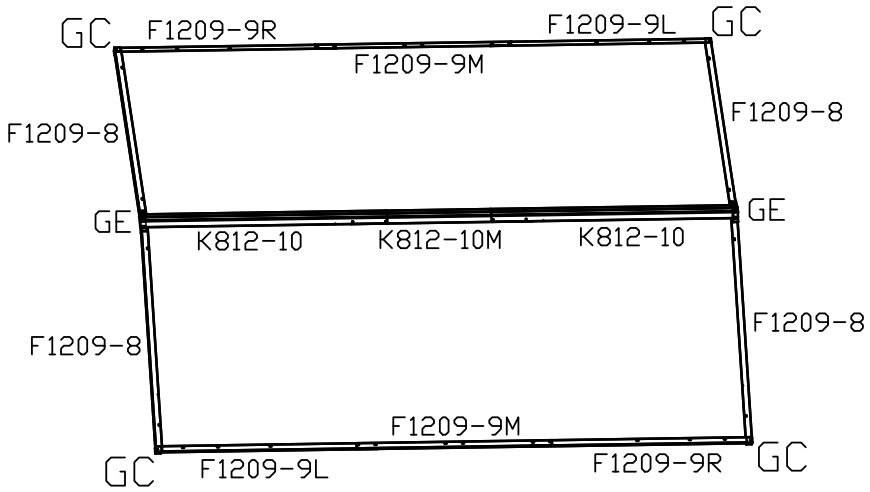

PART	NO.	QTY
	GE	2
	F4	4
	V2	4

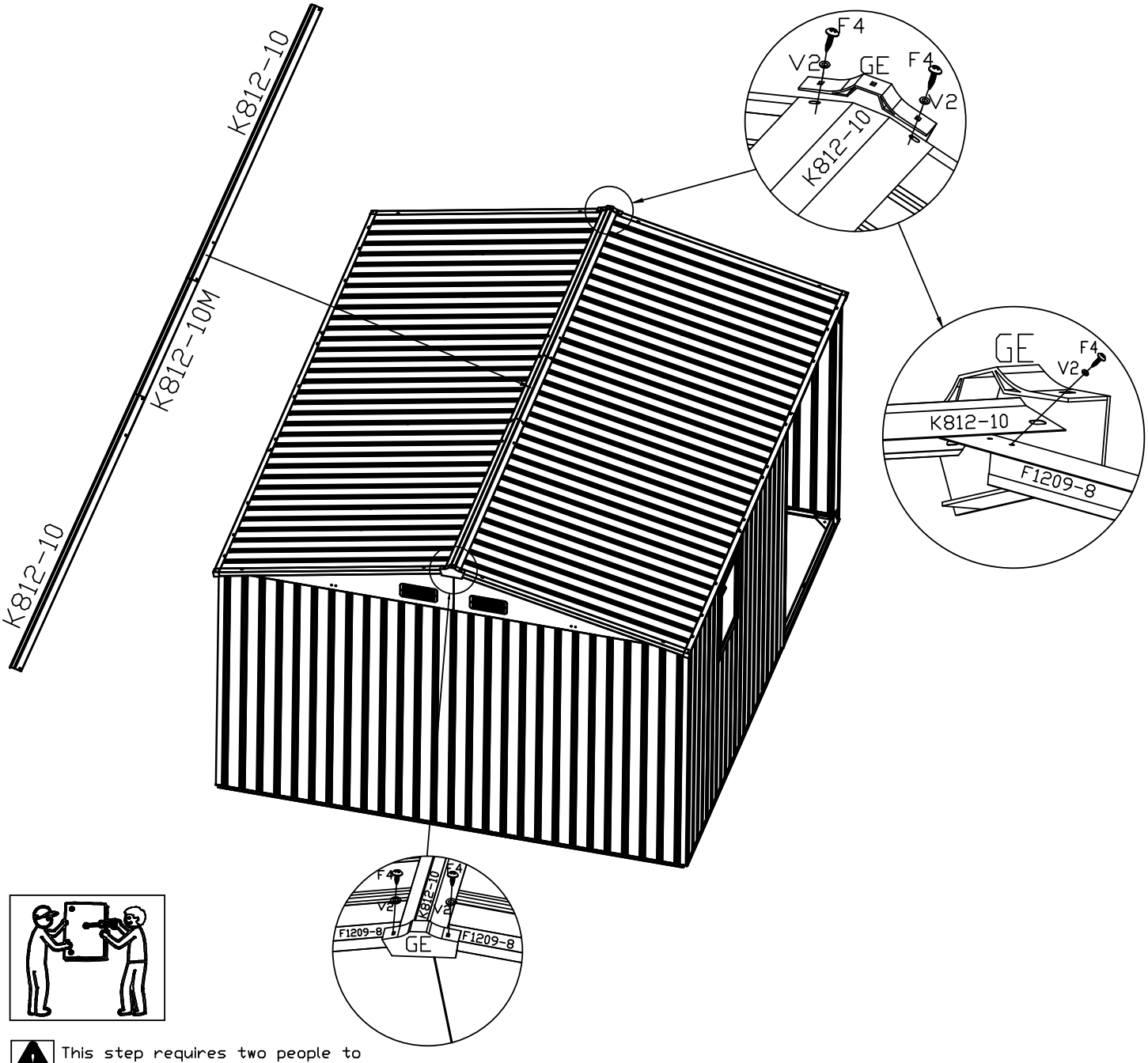

This step requires two people to complete the installation together.

STEP 3 1

Left door panel splicing

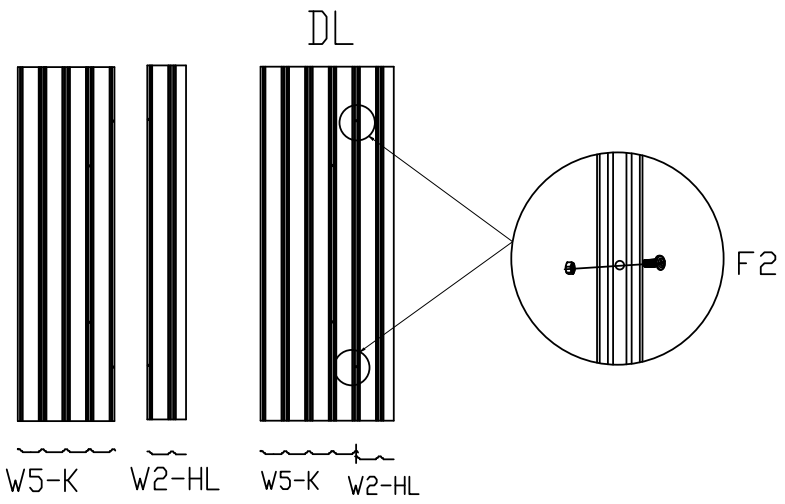

PART	NO.	QTY.
	W5-K	1
	W2-HL	1
	DAP	1
	DLA	1
	DDA	2
	F1	4
	F2	2

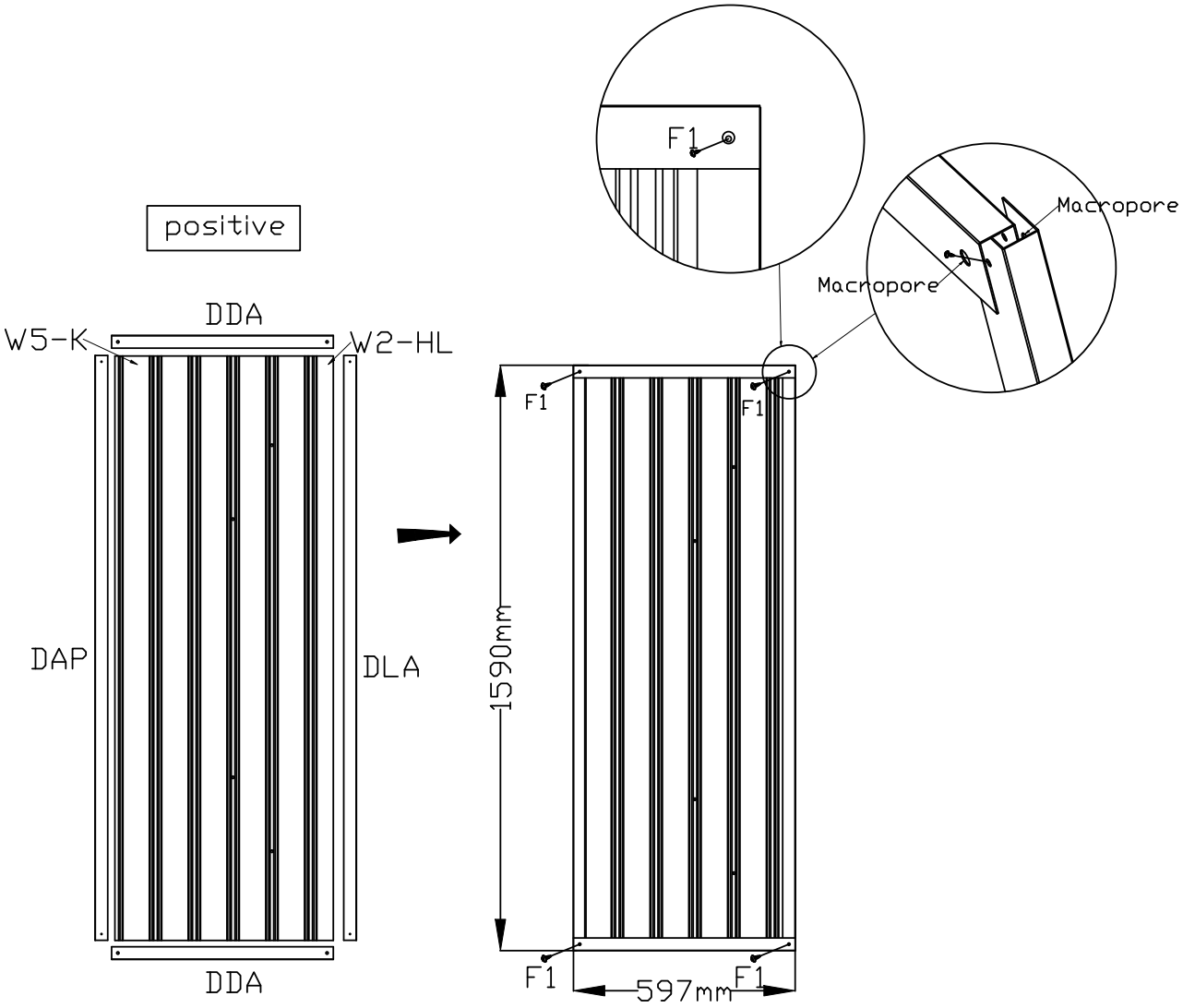

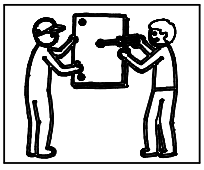

This step requires two people to complete the installation together.

STEP 3 2

Left door panel splicing

PART	NO.	QTY.
	DBA	2
	F1	5
	F2	2

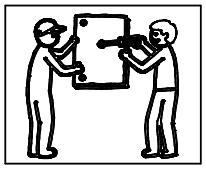

This step requires two people to complete the installation together.

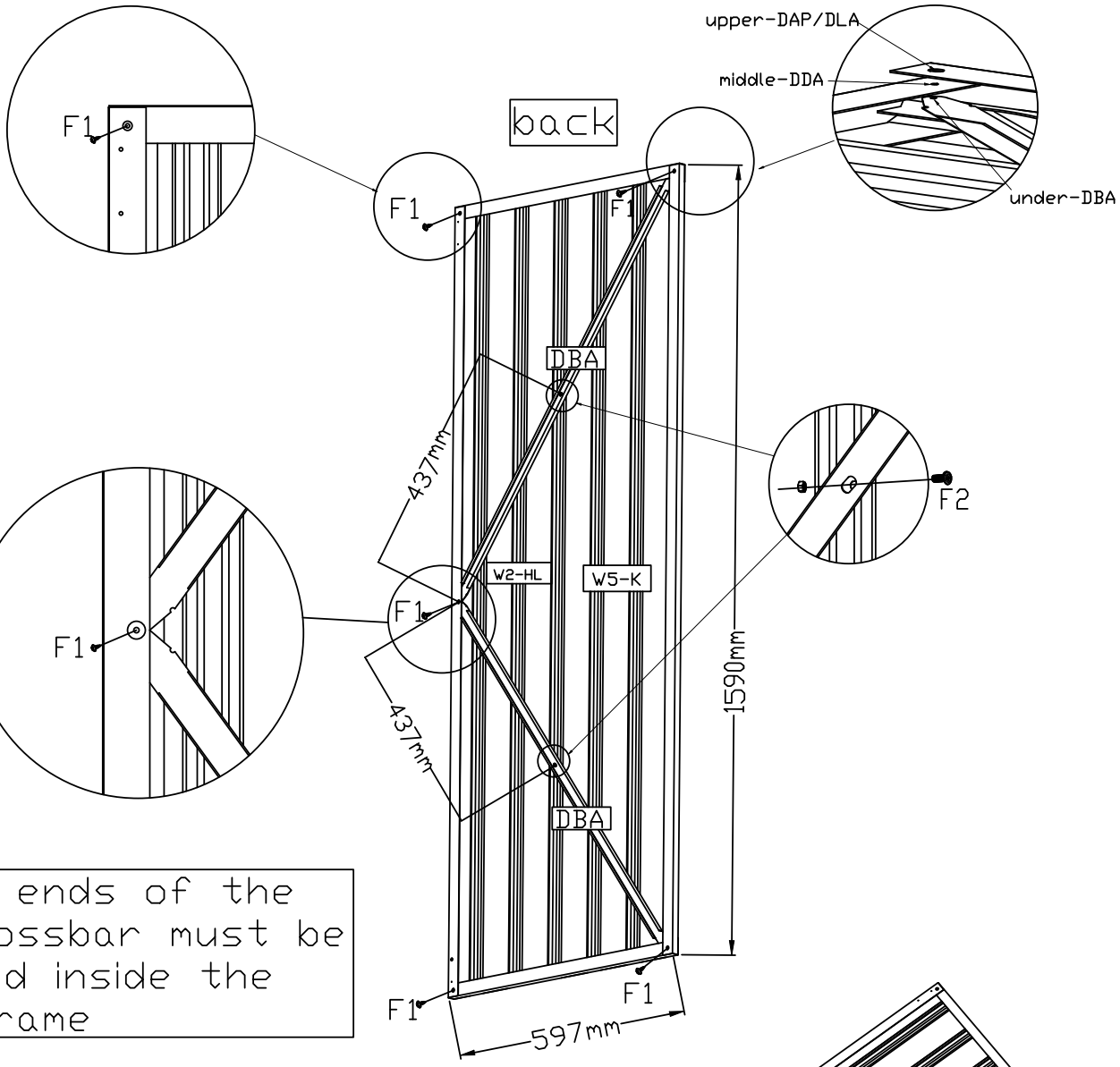

The two ends of the DBA crossbar must be assembled inside the door frame

