Sliding door TV stand

Assembly Instructions-Please keep for future reference

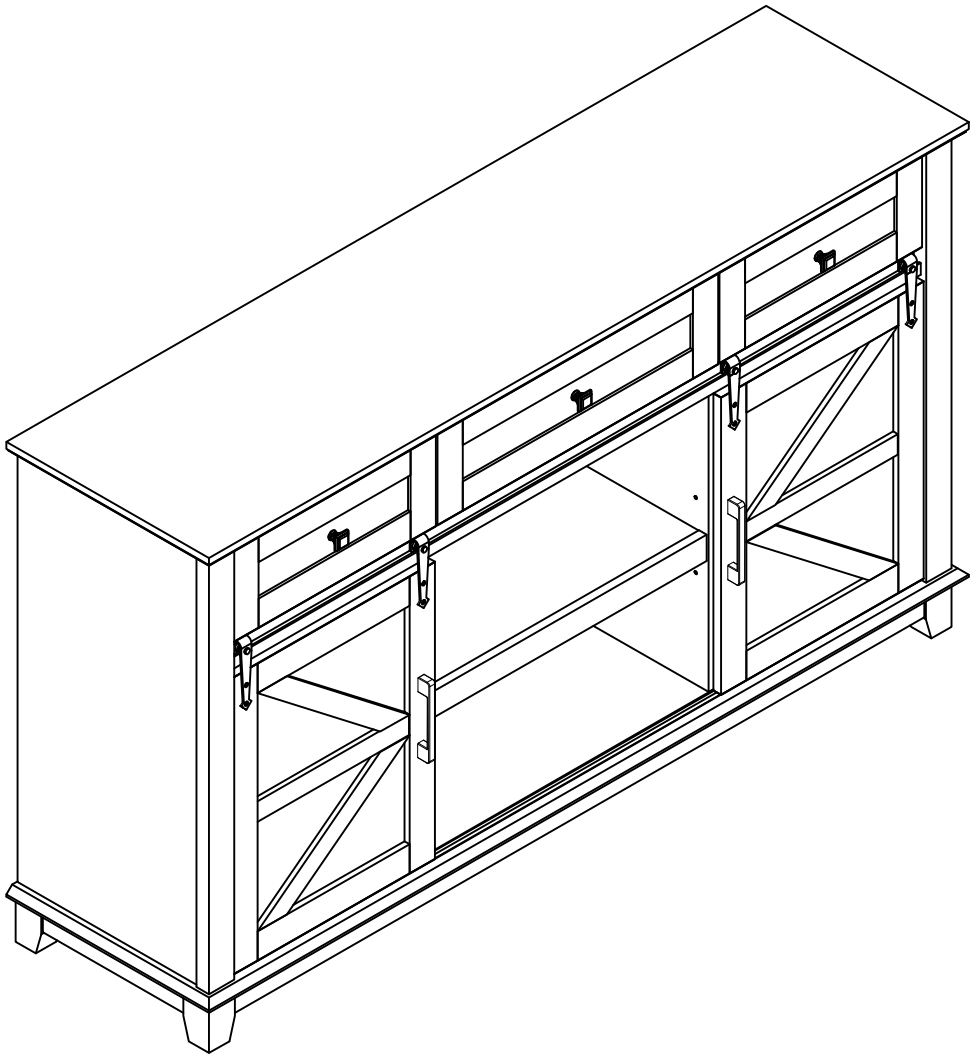

Dimensions
width-59.05 inch
Depth-15.75inch
Heigh-33.85 inch

Important-Please read these instructions fully before staring assembly

Safety and Care Advice

Important-Please read these instructions fully before staring assembly

- Check you have all the components and tools listed on the following pages.
- Remove all fittings from the plastic bags and separate them into their groups.
- Keep children and animals away from the work area,small parts could choke if swallowed.
- Make sure you have enough space to layout the parts before starting.
- During assembly do not stand or put weight on the product , this could cause damage/
- Assemble the item as close to its final position (in the same room) as possible.
- Assemble on a soft level surface to avoid damaging the unit or your floor.
- Parts of the assembly will be easier with 2 people.



- To reduce the likelihood of damaging your product please ensure that your power drill is set on a low torque setting .

Care and maintenance

- Only clean using a damp cloth and mild detergent ,do no use bleach or abrasive cleaners.
- From time to time check that there are no loose screws on this unit.
- This product should not be discarded with household waste. Take to your local authority waste disposal centre.

Handy Hints

- Assemble all parts and bolts loosely during assembly,only once the product is complete should you fully tighten the bolts.
- Regularly check and ensure that all bolts and fittings are tightend properly.

WARNING
In order to help prevent overturning-plese follow these insturctions

To help prevent product toppling over please follow the steps below:

- Must use the anti tip strap or wall fixing method provided (whichever applies).
- Do not allow children to climb or hang on the furniture.
- Do not place heavy items on top of the furniture,unless the furniture has been designed for this purpose
- Installation shall be carried out exactly according to the instructions-otherwise a safety risk can occur
- In order to prevent falling down this product must be used with the wall attachment device provided

please note that only the wall attachment device is provided .You will need to supply wall plugs and screws applicable for your wall type.

Components-Panels

Please check you have all the panels listed below

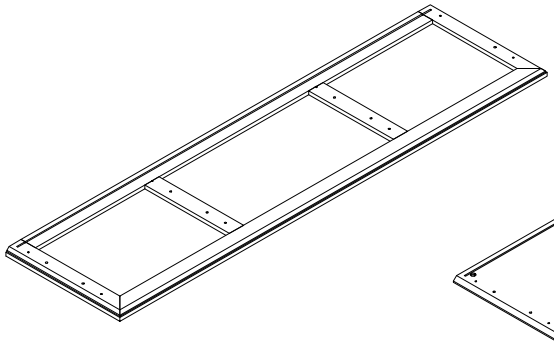

1 (150 x 40 x 2.4cm) x1

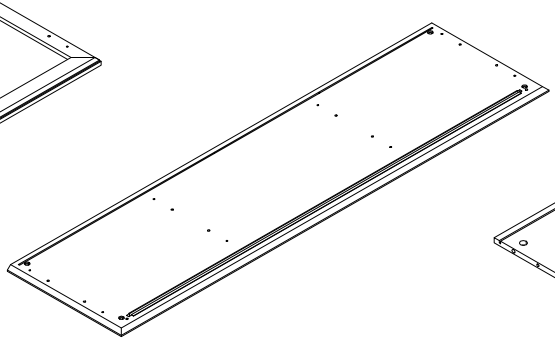

2 (150 x 40 x 1.5cm) x1

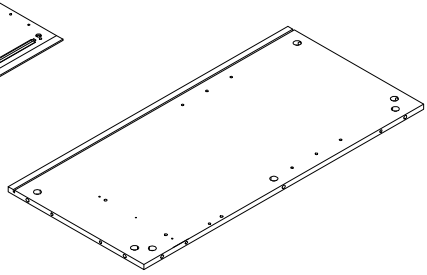

3 (73.6 x 35.7 x 1.2cm) x1

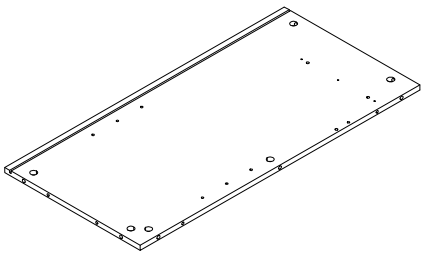

4 (73.6 x 35.7 x 1.2cm) x1

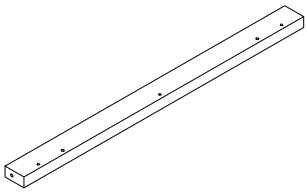

5 (73.6 x 5 x 2.5cm) x2

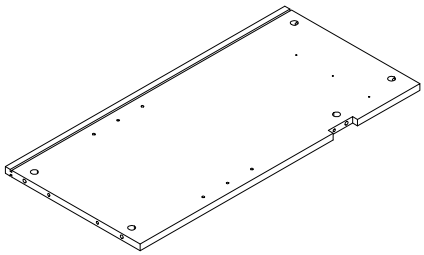

6 (73.6 x 35.5 x 1.5cm) x1

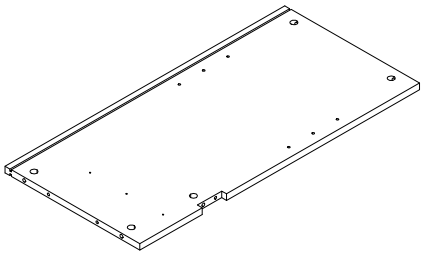

7 (73.6 x 35.5 x 1.5cm) x1

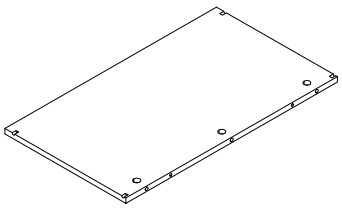

8 (55.7 x 31.9 x 1.2cm) x1

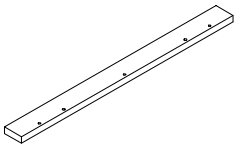

9 (55.7 x 4.5 x 1.5cm) x1

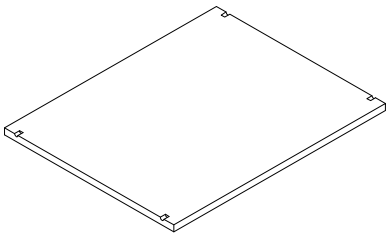

10 (41.9 x 33.4 x1.2cm) x2

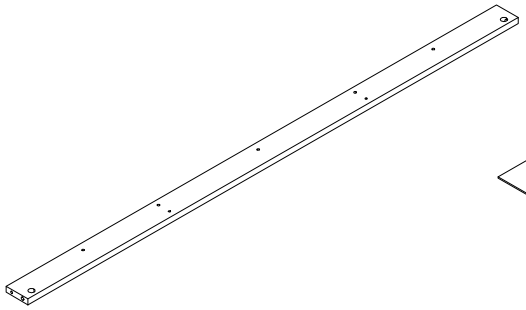

11 (143.4 x 6.4 x1.5cm) x1

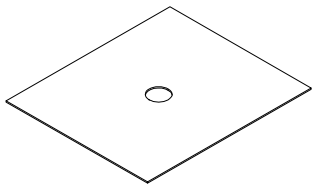

12 (43.1 x 37.2 x0.3cm) x4

Components-Panels

Please check you have all the panels listed below

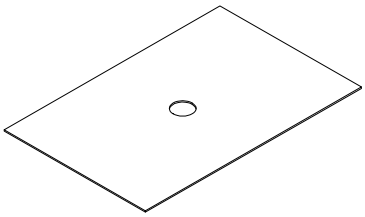

13 (56.8 x 37.2 x0.3cm) x2

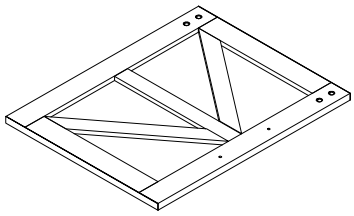

14 (50.7 x 40 x1.5cm) x1

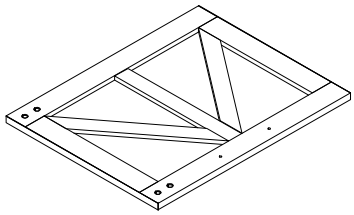

15 (50.7 x 40 x1.5cm) x1

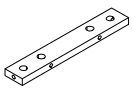

16 (28 x 4.5 x 1.5cm) x2

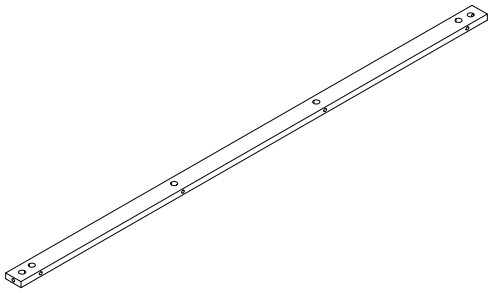

17 (136.4 x 4.5 x 1.5cm) x2

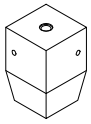

18 (8.5 x 5.1 x 5.1cm) x4

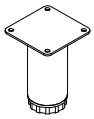

19 (8.5 x 6 x 6cm) x2

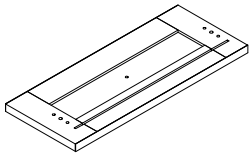

20 (40 x 16.3 x 1.5cm) x1

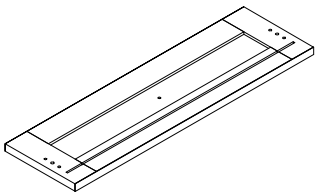

21 (55.4 x 16.3 x 1.5cm) x1

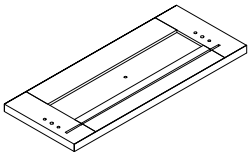

22 (40 x 16.3 x 1.5cm) x1

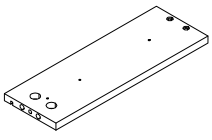

23 (30 x 10.2 x 1.2cm) x3

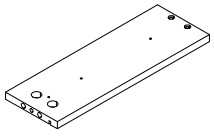

24 (30 x 10.2 x 1.2cm) x3

Components-Panels

Please check you have all the panels listed below

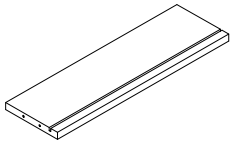

25 (33.8 x 10.2 x 1.2cm) x2

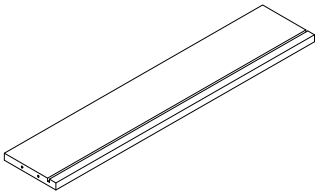

26 (51 x 10.2 x 1.2cm) x1

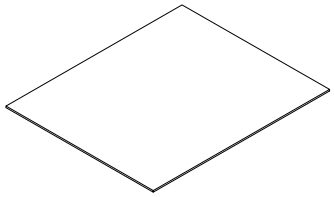

27 (34.8 x 29.6 x 0.3cm) x2

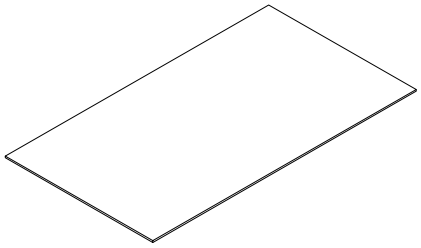

28 (52 x 29.6 x 0.3cm) x1

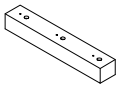

29 (25 x 4 x 3.4cm) x2

Components-Fittings

Please check you have all the fittings listed below

NOTE: The quantities below are the correct amount to complete assembly. In some cases more fittings may be supplied than are required.

A  7*34mm Cam Bolt x 61	B  15*9Cam Lock x 61	C  6*30mm Wooden Dowel x 36
D  8*30mm Wooden Dowel x 4	E  1/4*25mm Bolt x 4	F  1/4*12mm Bolt x 8
G  Pulley x 4	H  Door stop x 4	I  3.5*12mm Screw x 8
J  5*16mm shelf support x 12	K  4*14mm Screw x 8	L  Handle x 2
M  5/32*20mm Handle bolt x 4	N  Handle x 3	O  5/32*10mm Handle bolt x 3
P  Back plate buckle x 18	Q  3*16mm Screw x 18	R 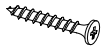 4*30mm Screw x 12
S  Drawer rail x 6	T  3.5*12mm Screw x 36	U  4*38mm Screw x 6
V  Short clip x 2	R 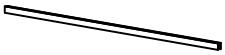 Long clip x 1	

 4*12mm Screw x 2

 4*25mm Screw x 2

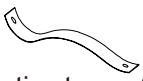 Plastic strap x 2

 Nut x 2

Tools required

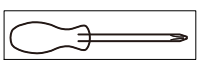

Phillips screwdriver (medium & large)

Ruler - Use this ruler to help correctly identify the screws

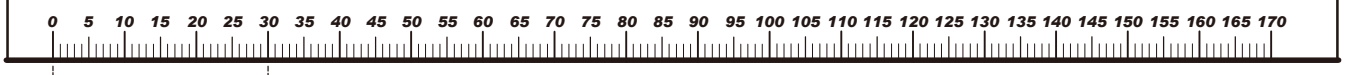

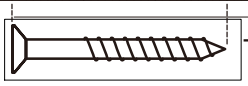

The screws length is measured from the head to the point (30mm screw shown).

Using Camlocks

Step 1

Connect the male camlock as directed in the assembly instructions using a screwdriver.

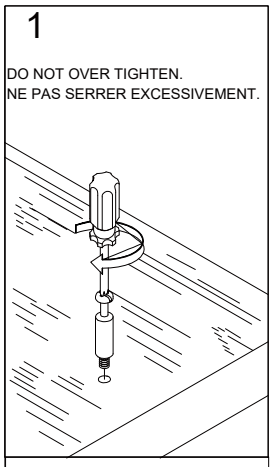

Step 2

Push the male camlock into the entry hole.

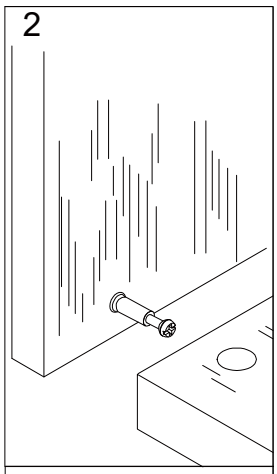

Step 3

Insert the female camlock as shown in the instructions.

Note: ensure that the arrow on the top of the camlock points towards the entry hole for the male camlock.

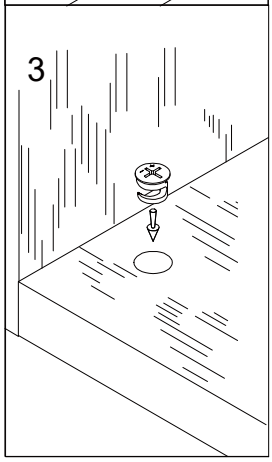

Step 4

Turn the female camlock clockwise with a screwdriver.
You should feel a click when the camlock is locked in place.
The joint is now secure.

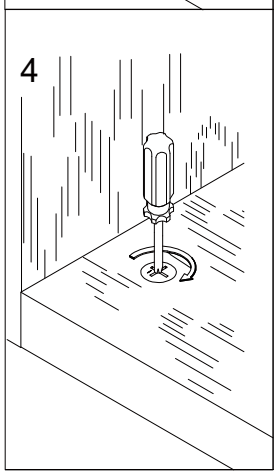

Assembly Instructions

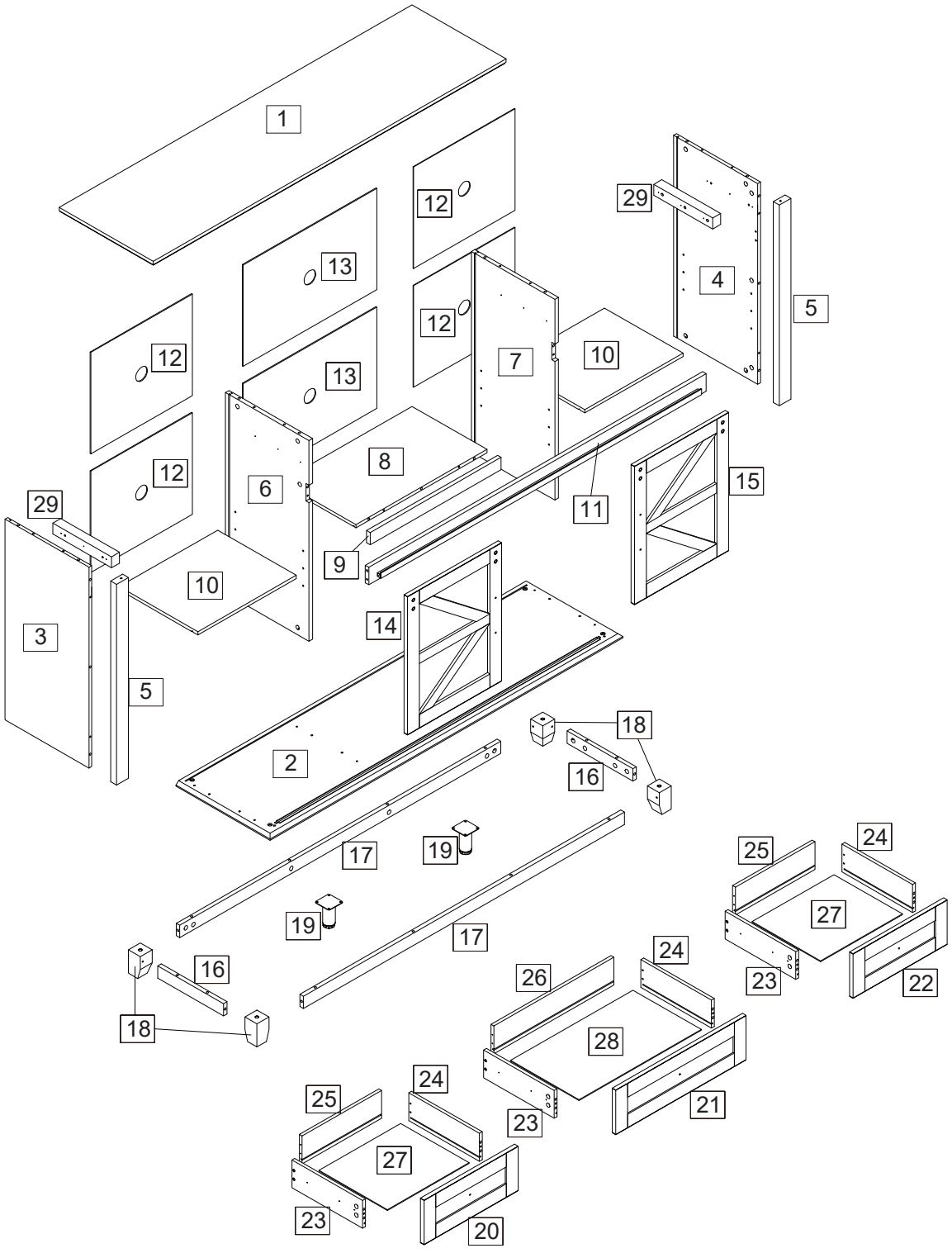

Assembly Instructions

Step 1

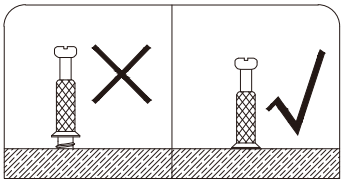

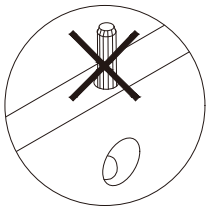

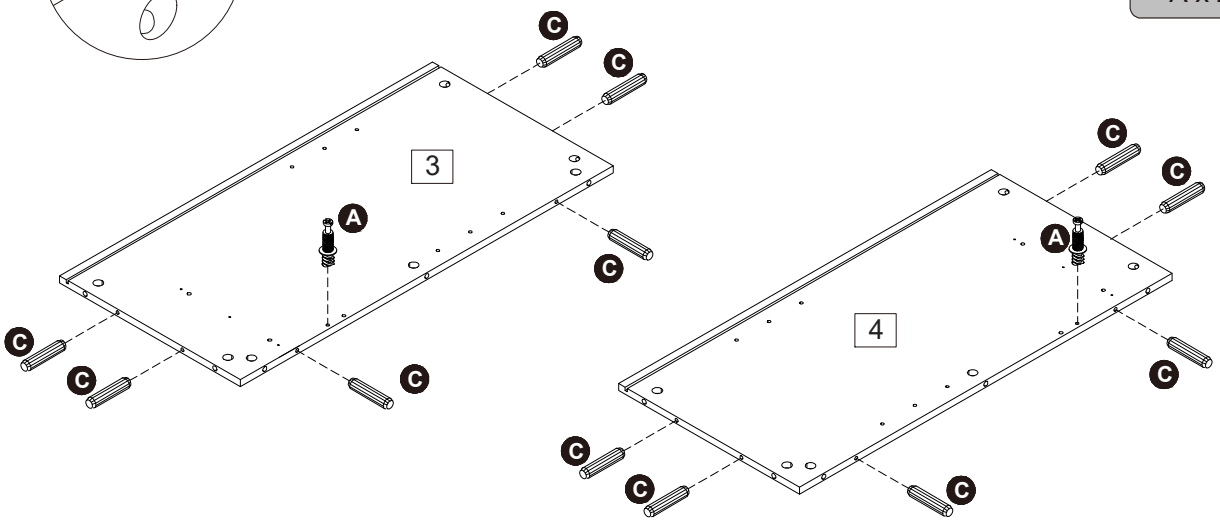

C x 12

A x 2

Step 2

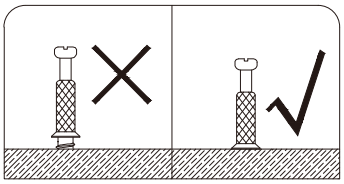

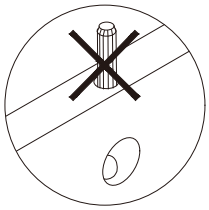

C x 6

D x 4

A x 8

Assembly Instructions

Step 3

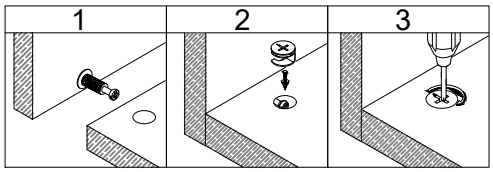

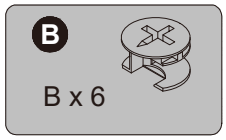

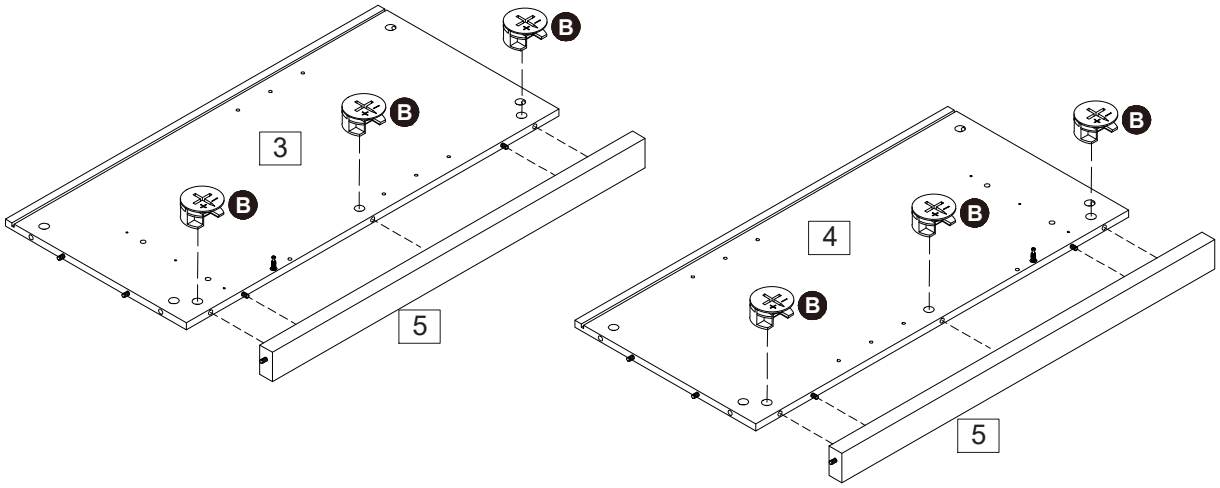

Step 4

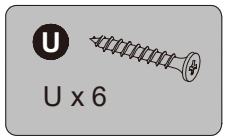

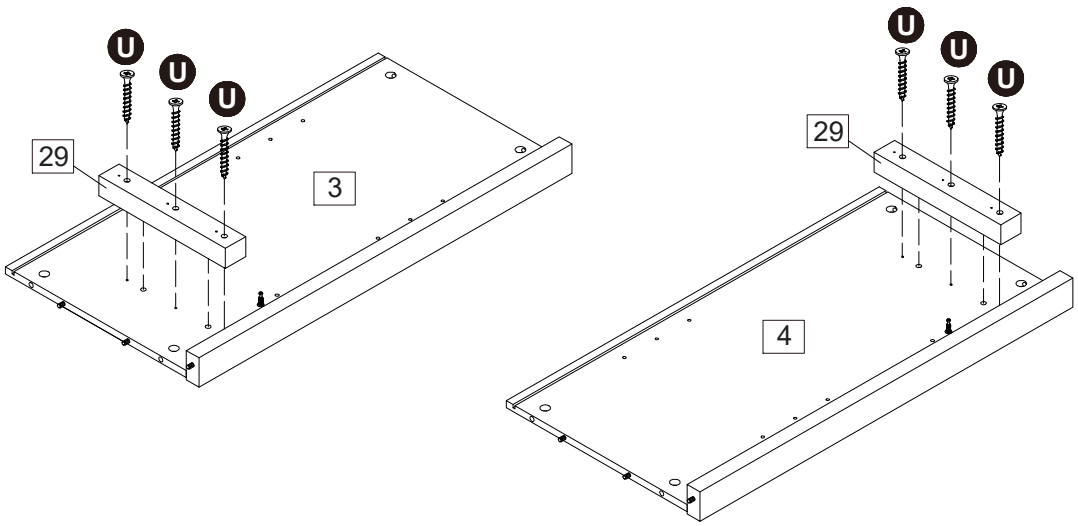

Assembly Instructions

Step 5

C x 10

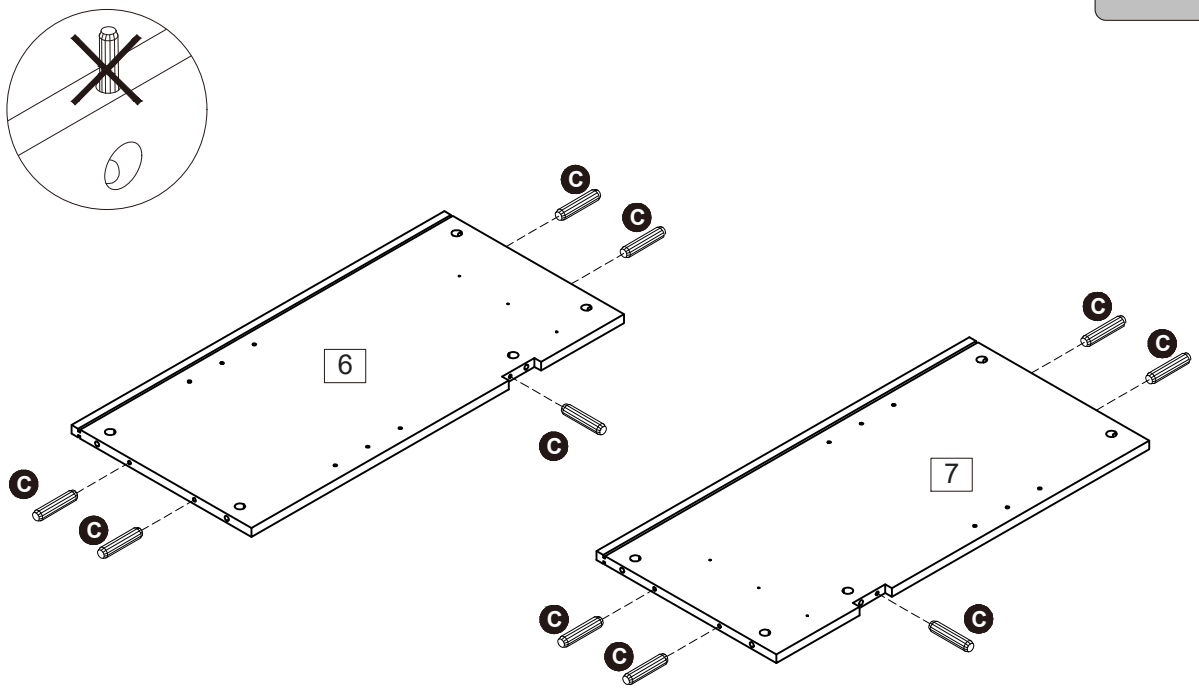

Step 6

S x 6

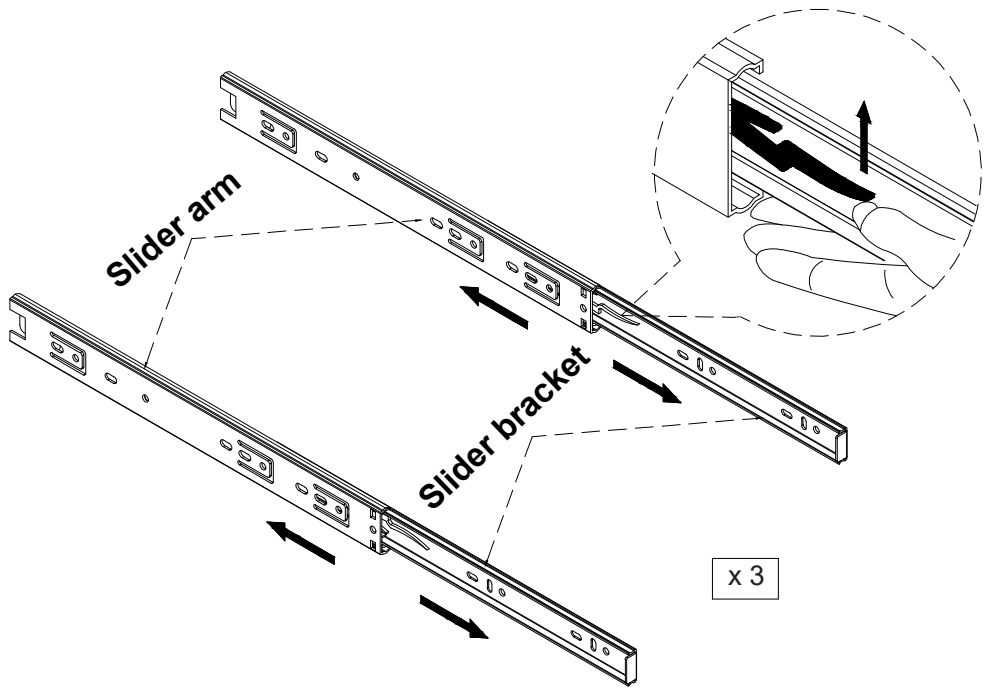

Assembly Instructions

Step 7

T x 6

Attention:
1.Please locate the holes from the back of part D1.

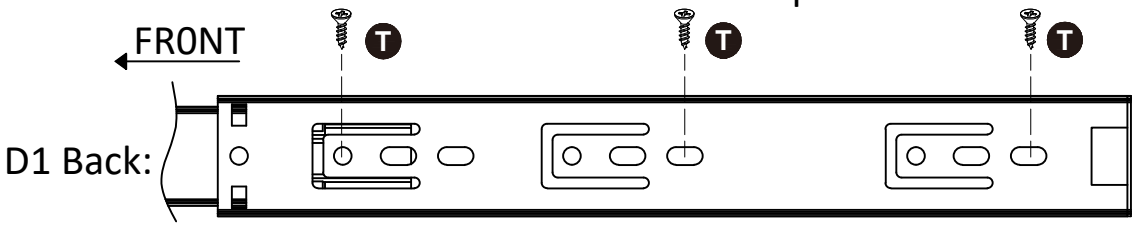

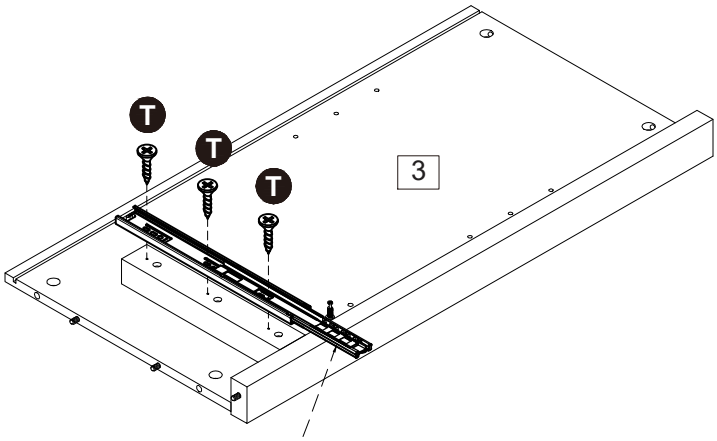

Slider arm

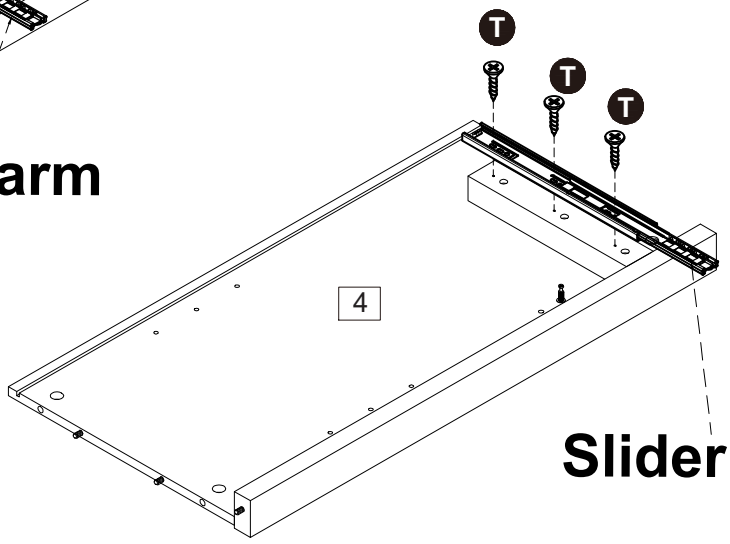

Slider arm

Step 8

T x 12

Attention:
1.Please locate the holes from the back of part D1.

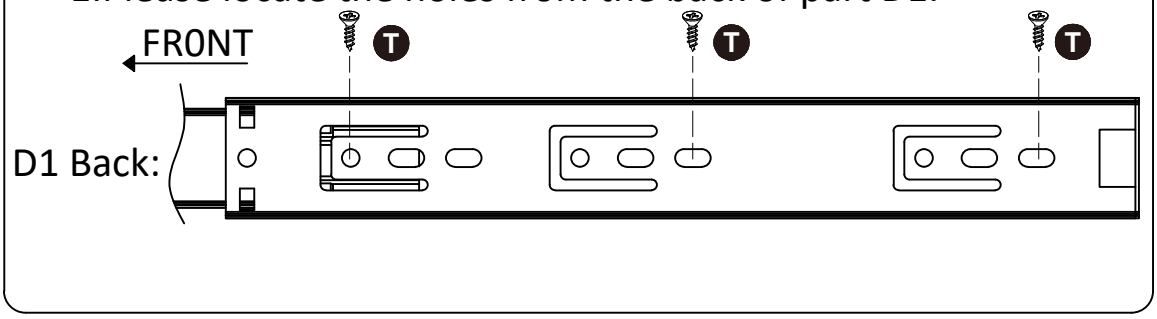

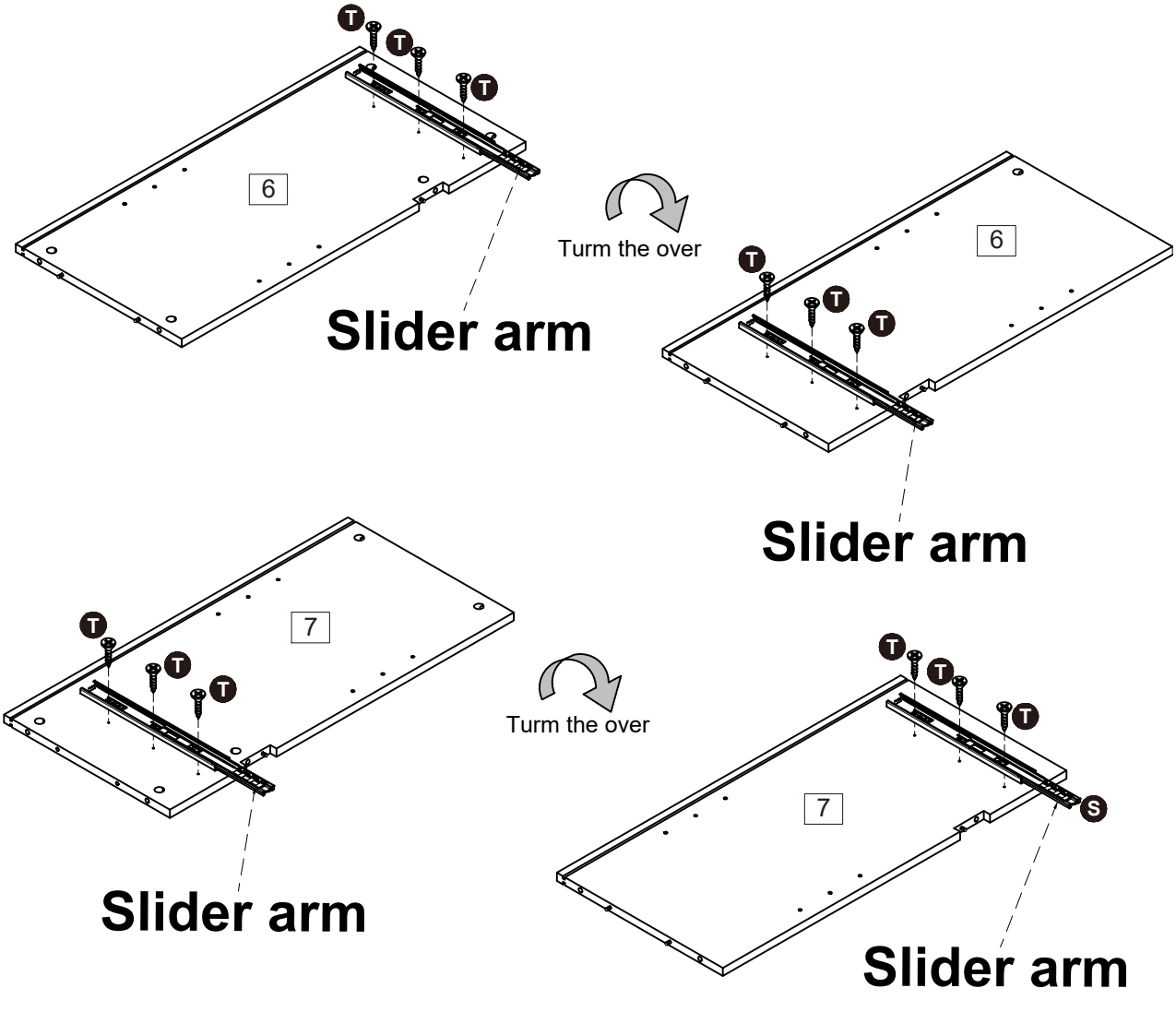

Assembly Instructions

Step 9

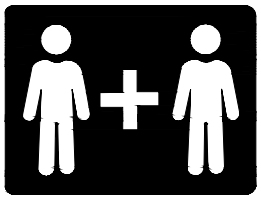

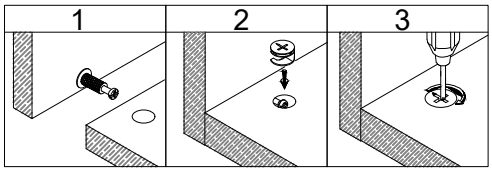

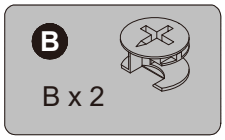

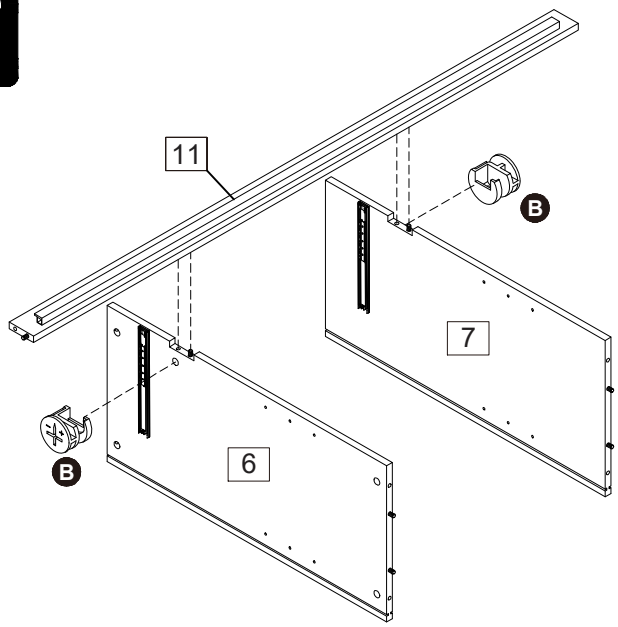

Step 10

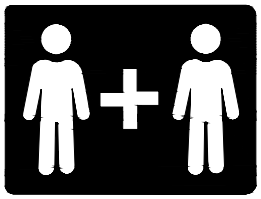

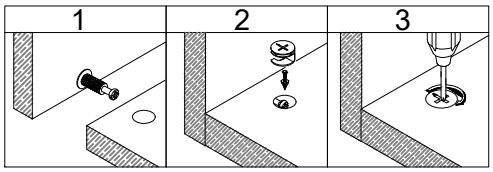

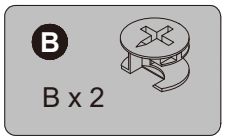

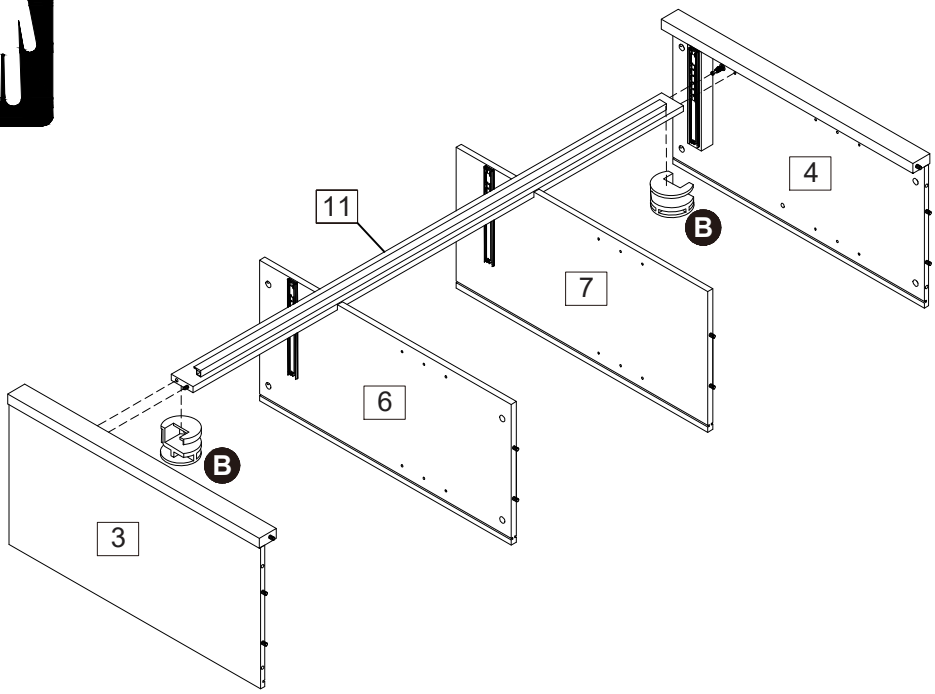

Assembly Instructions

Step 11

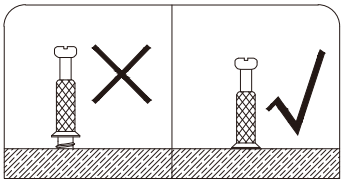

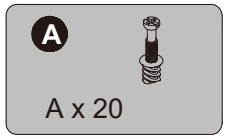

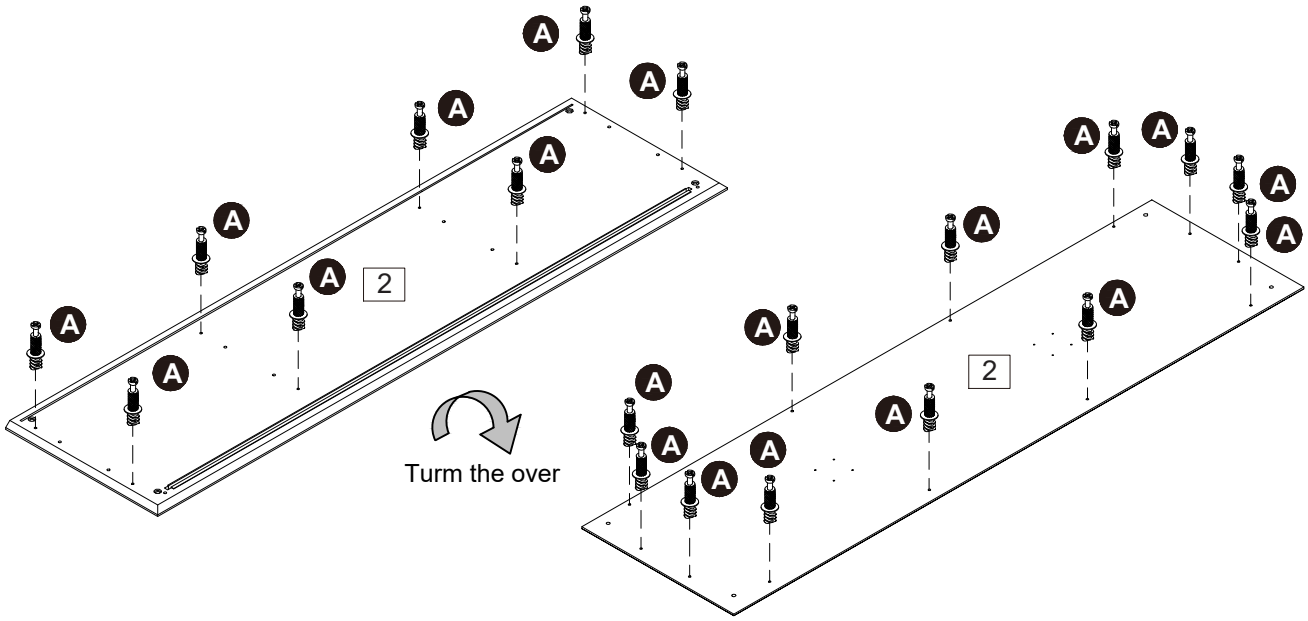

Step 12

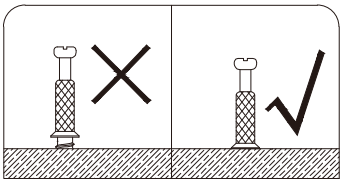

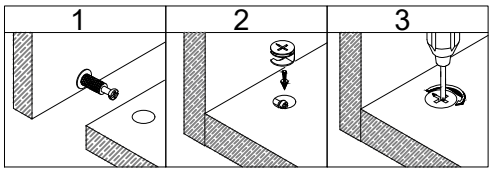

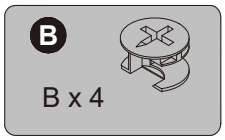

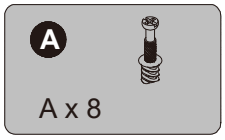

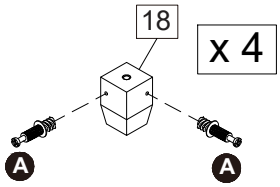

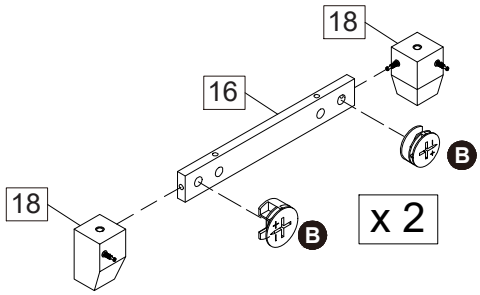

Assembly Instructions

Step 13

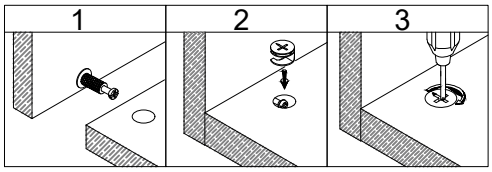

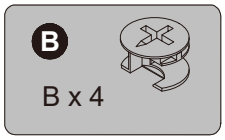

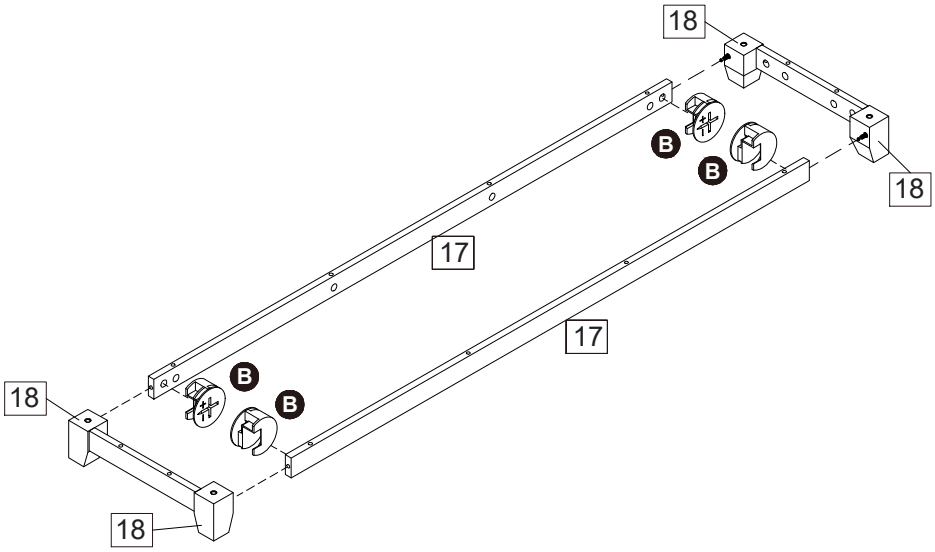

Step 14

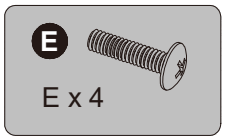

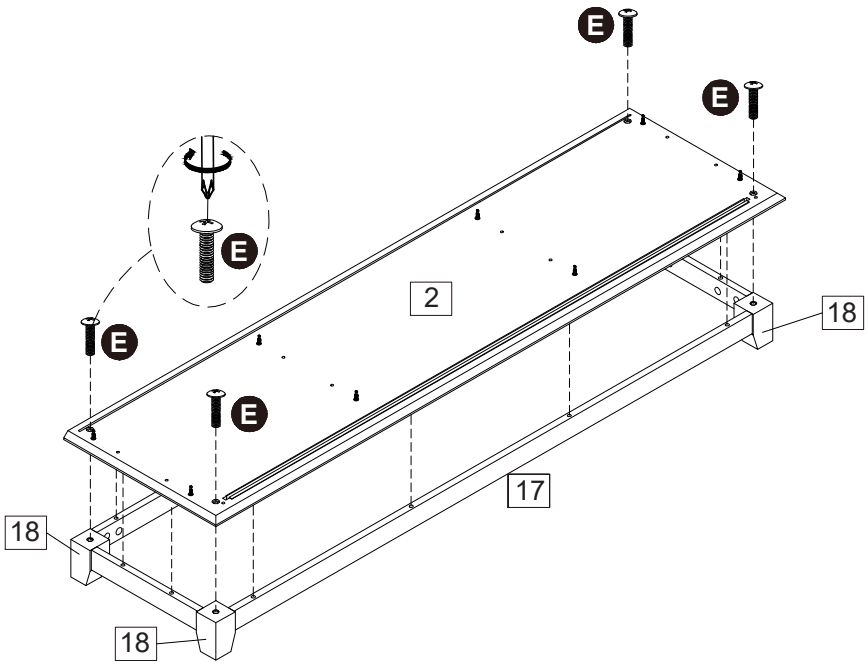

Assembly Instructions

Step 15

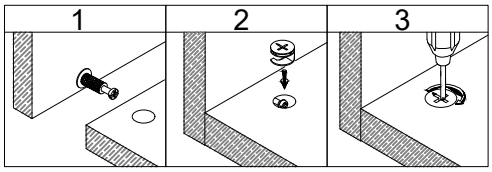

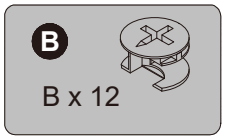

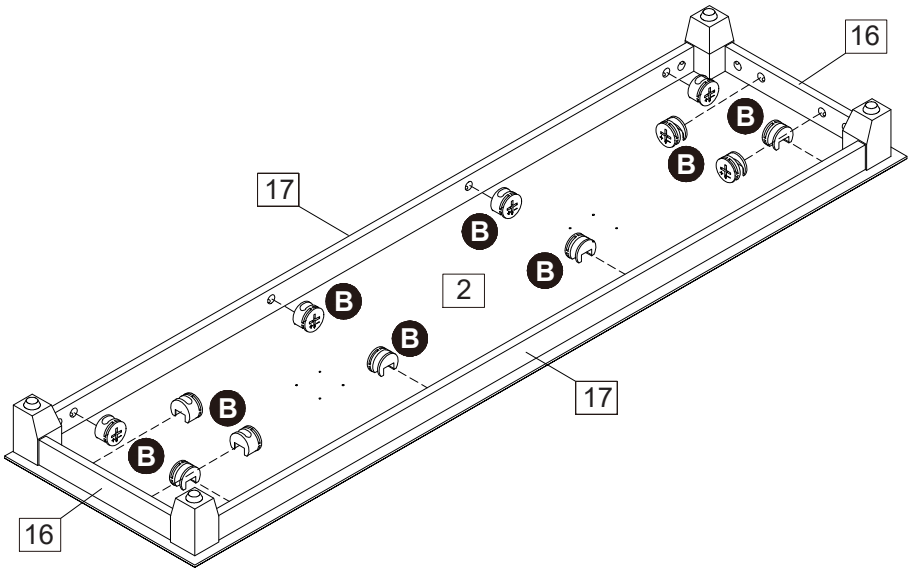

Step 16

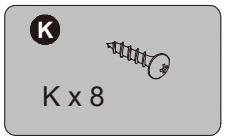

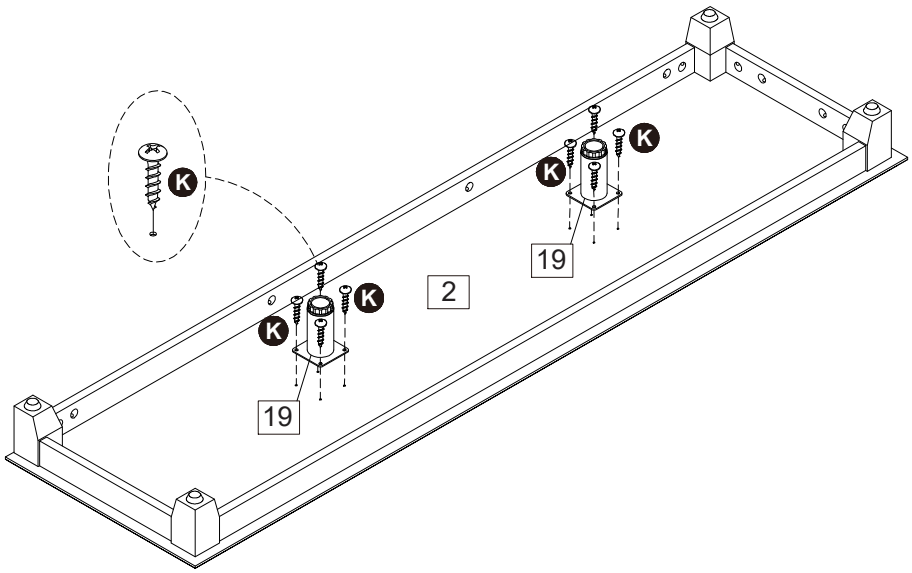

Assembly Instructions

Step 17

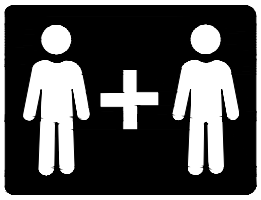

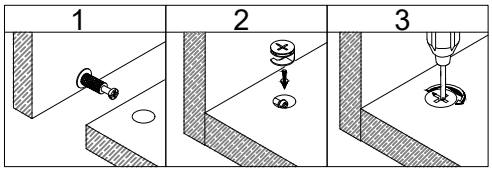

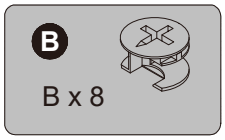

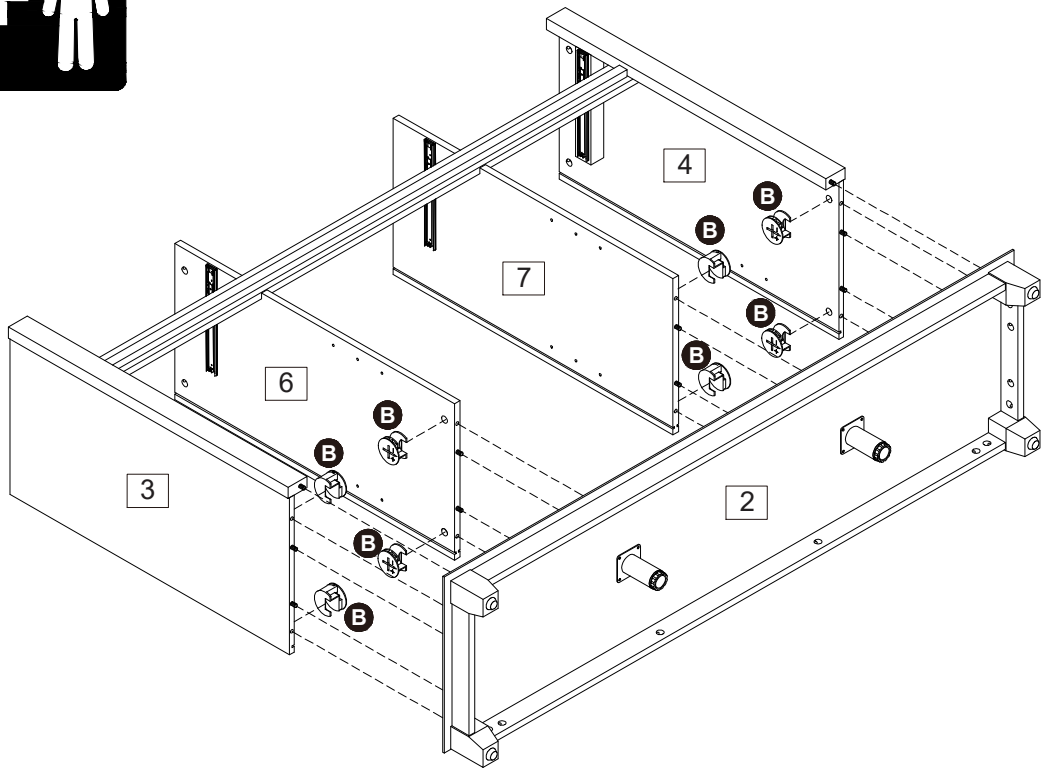

Step 18

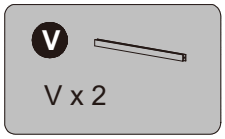

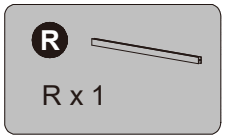

Assembly Instructions

Step 19

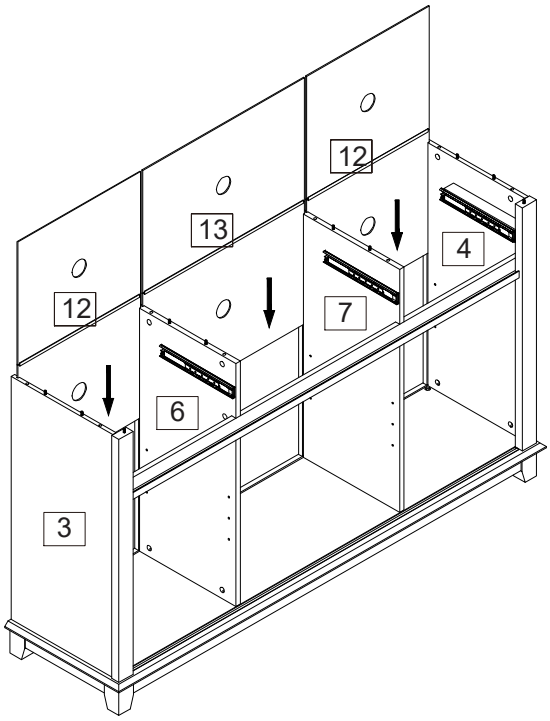

Step 20

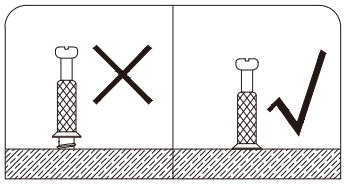



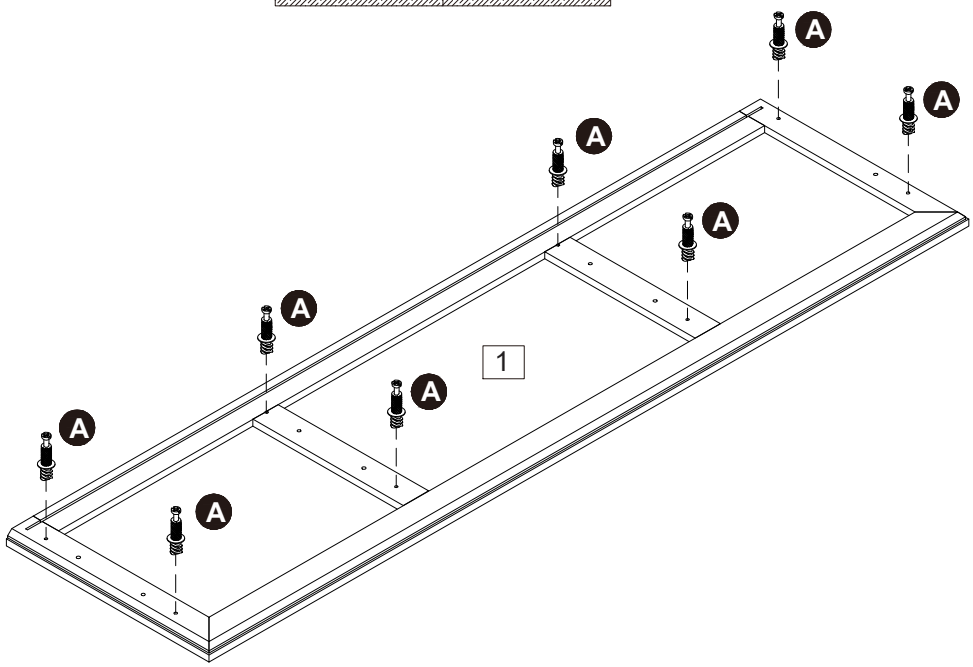

Assembly Instructions

Step 21

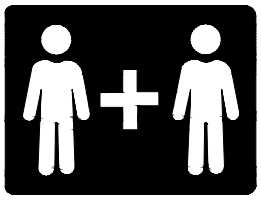

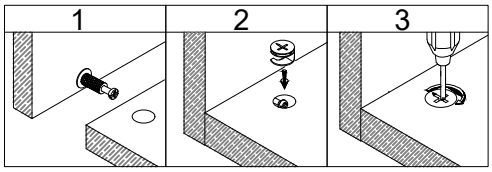

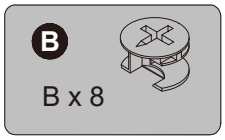

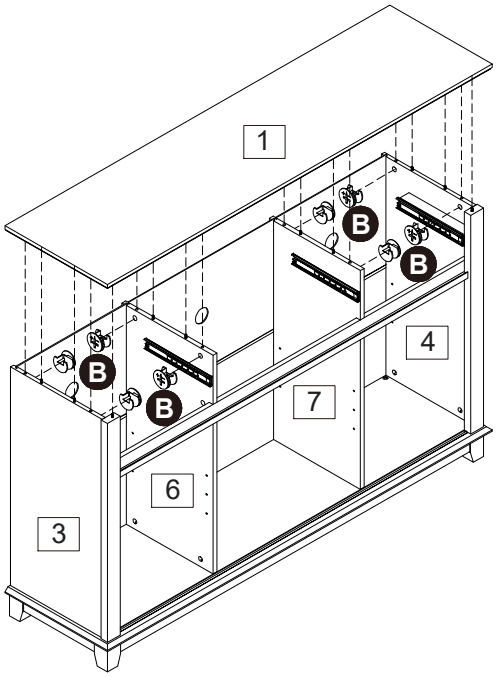

Step 22

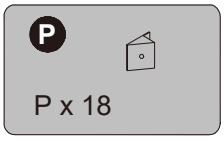

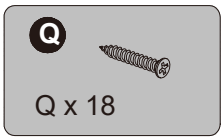

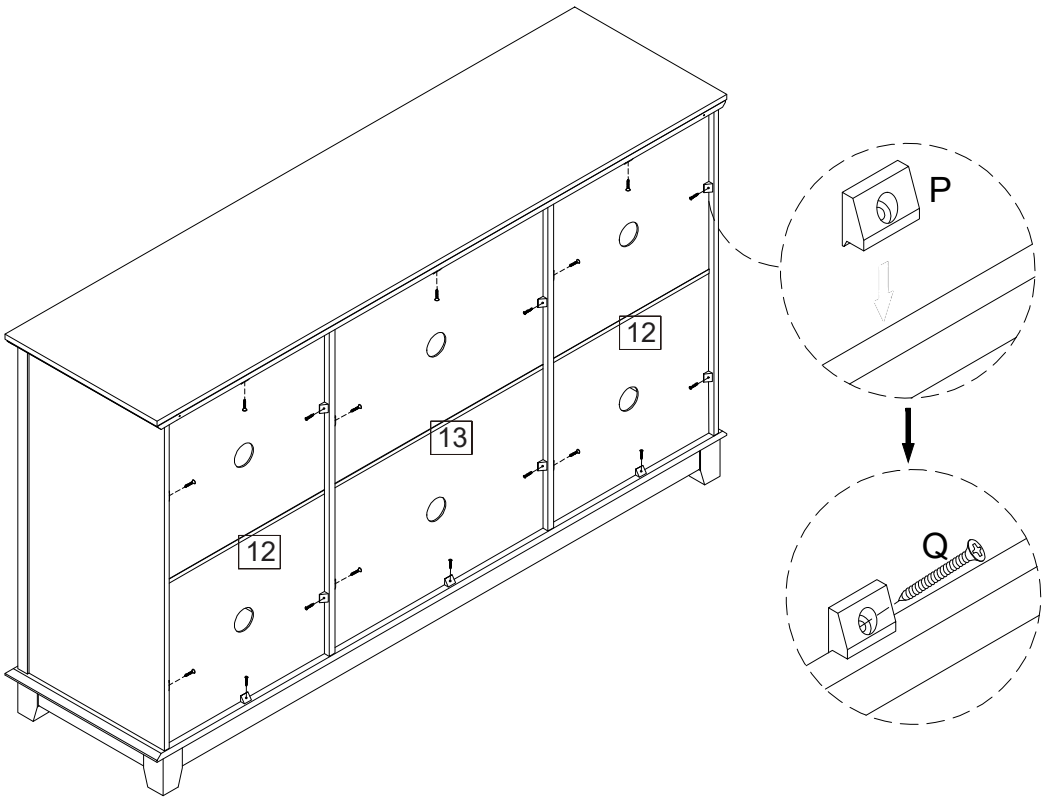

Assembly Instructions

Step 23

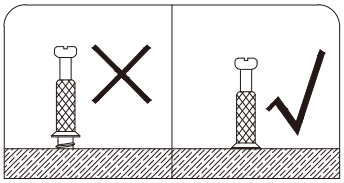

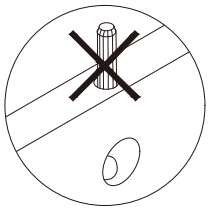

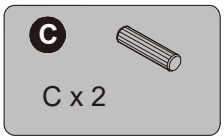

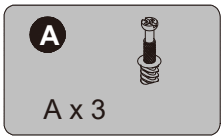

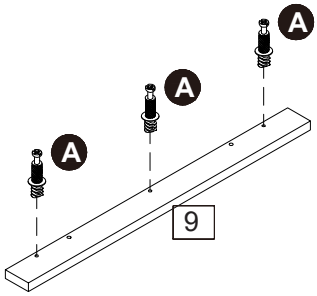

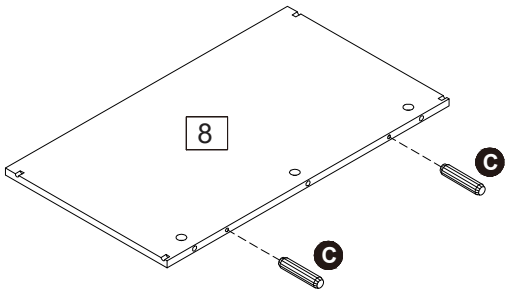

Step 24

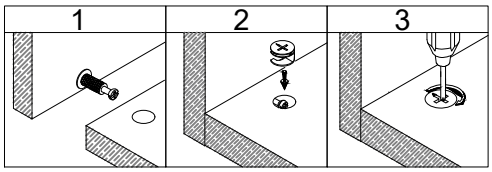

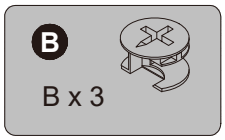

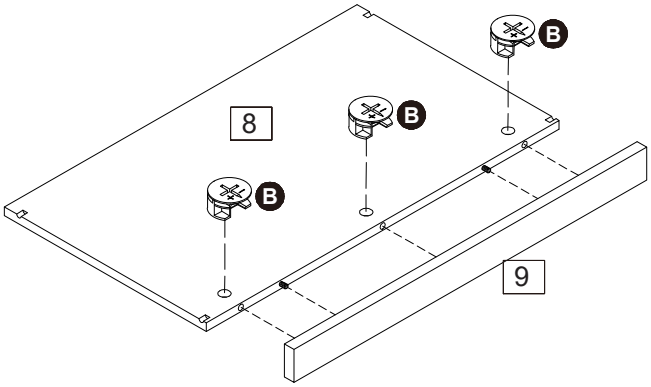

Assembly Instructions

Step 25

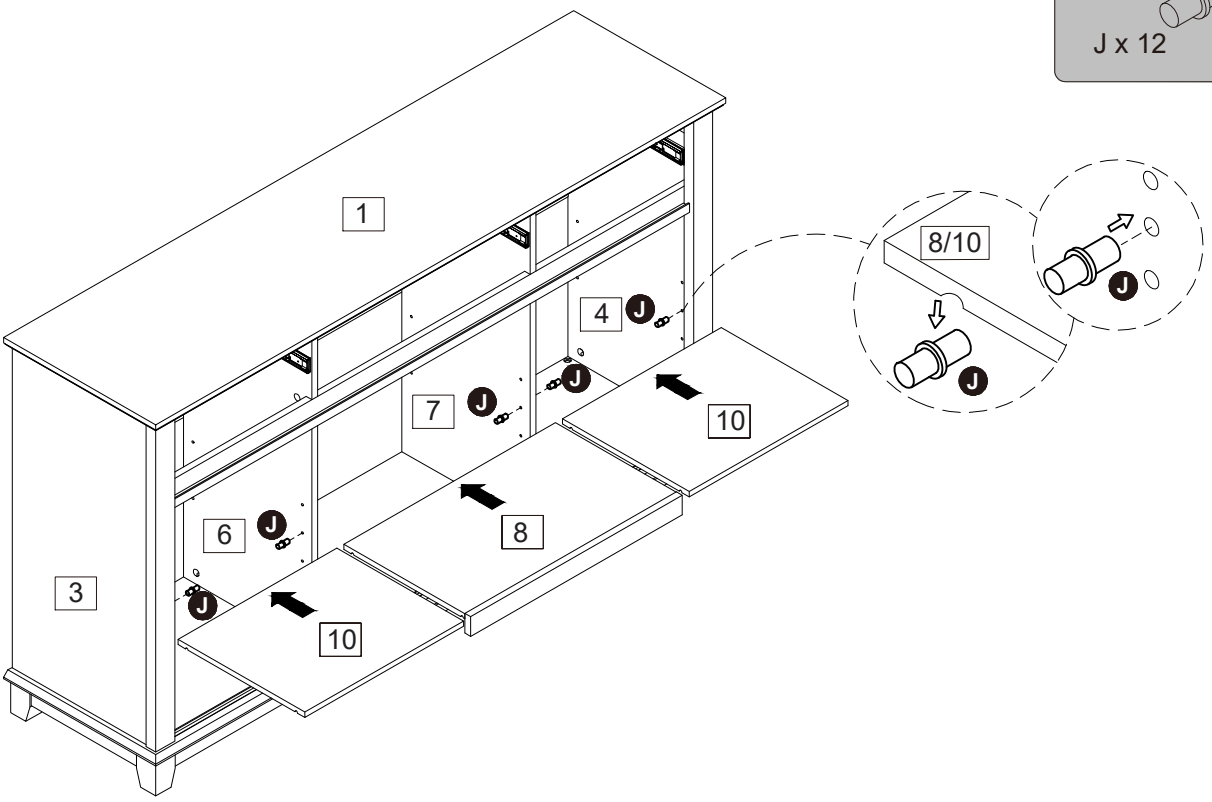

J x 12

Step 26

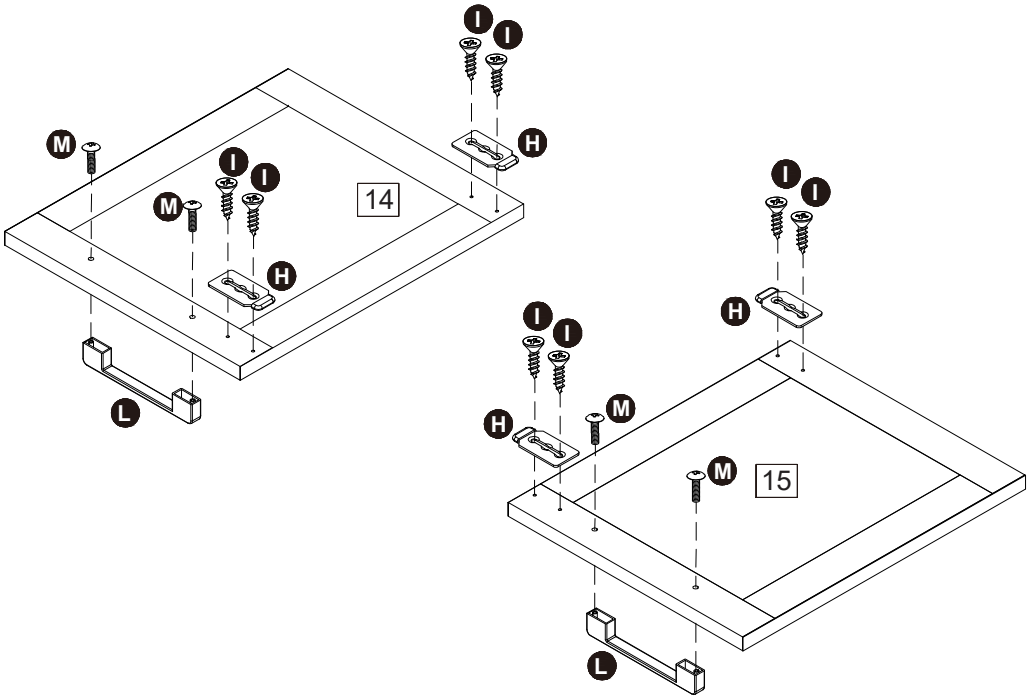

H x 4

I x 8

L x 2

M x 4

Assembly Instructions

Step 27

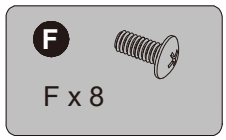

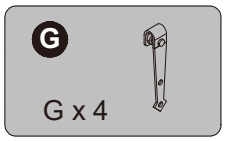

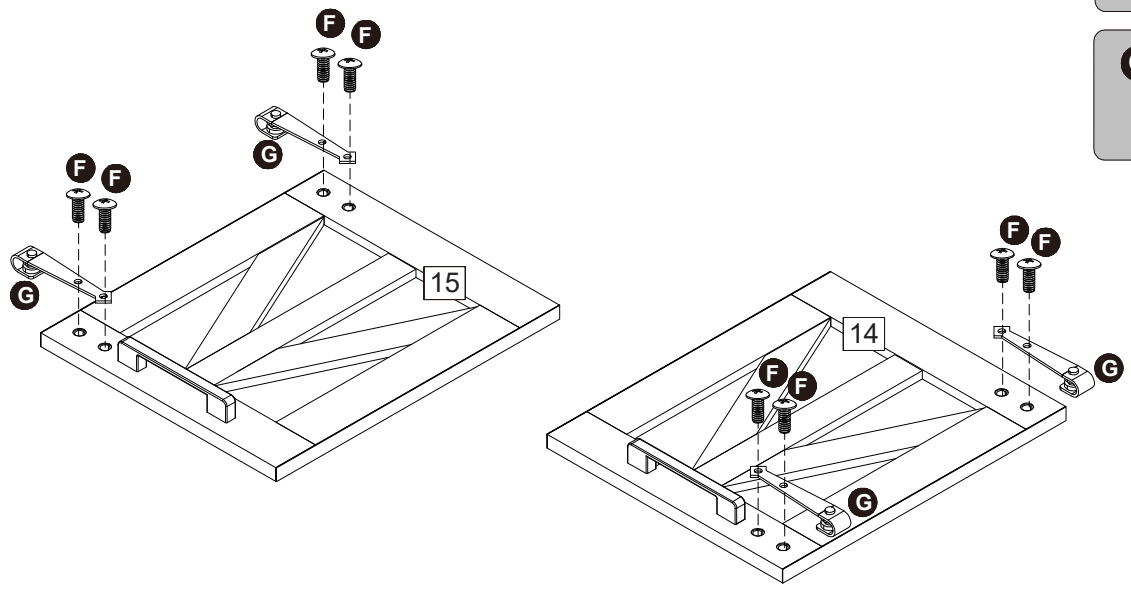

Step 28

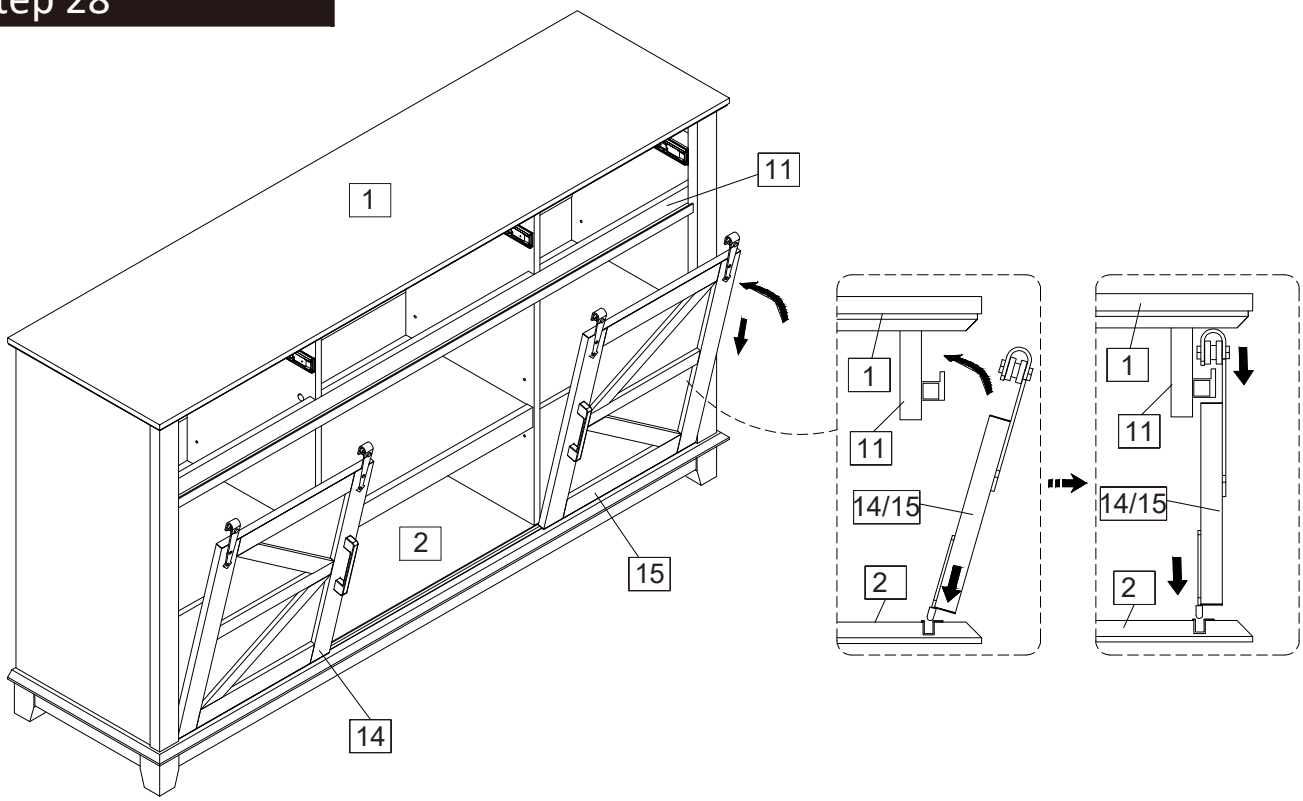

Assembly Instructions

Step 29

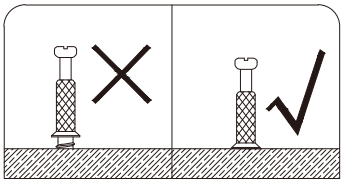



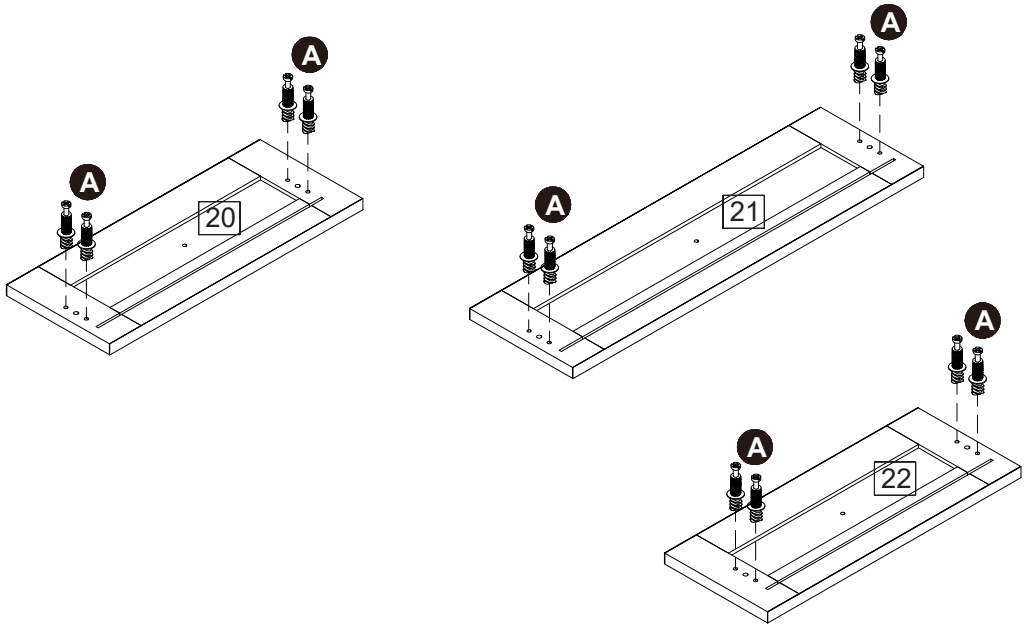

Step 30

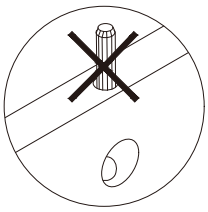

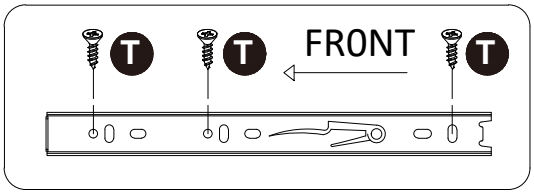

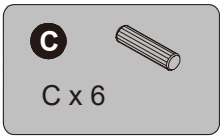

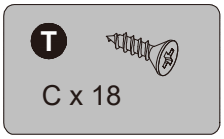

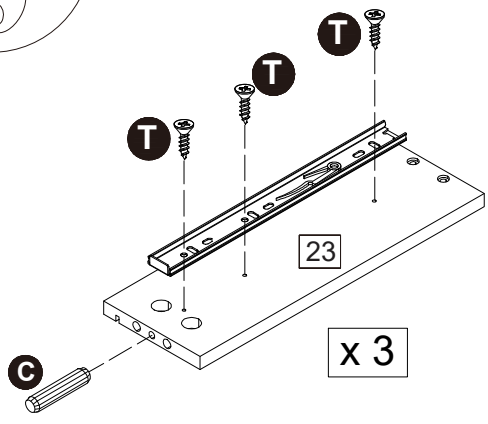

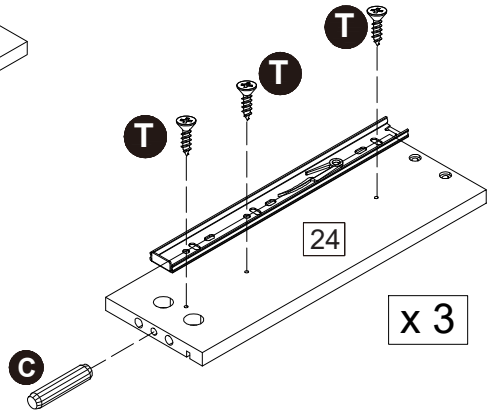

Assembly Instructions

Step 31

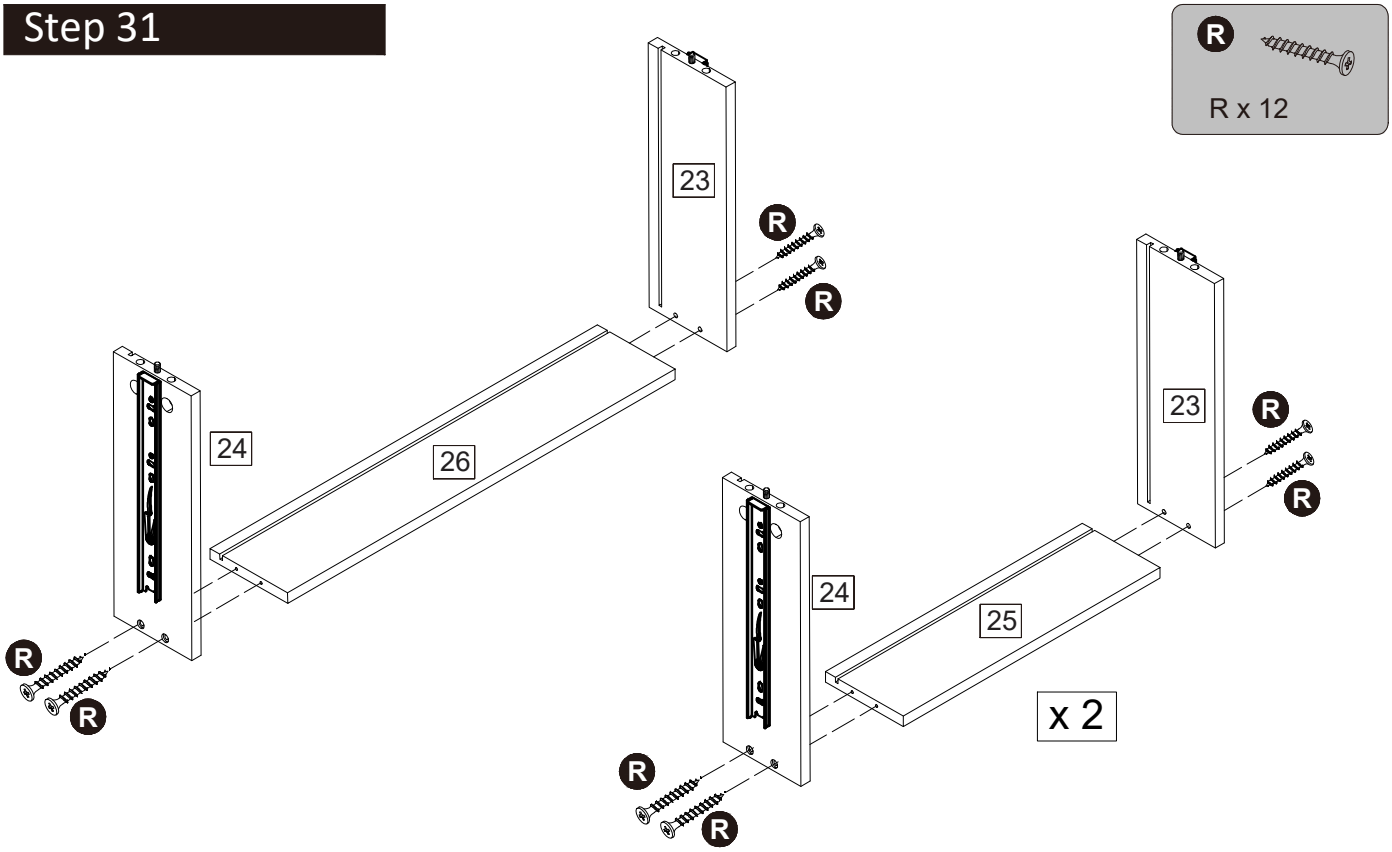

Step 32

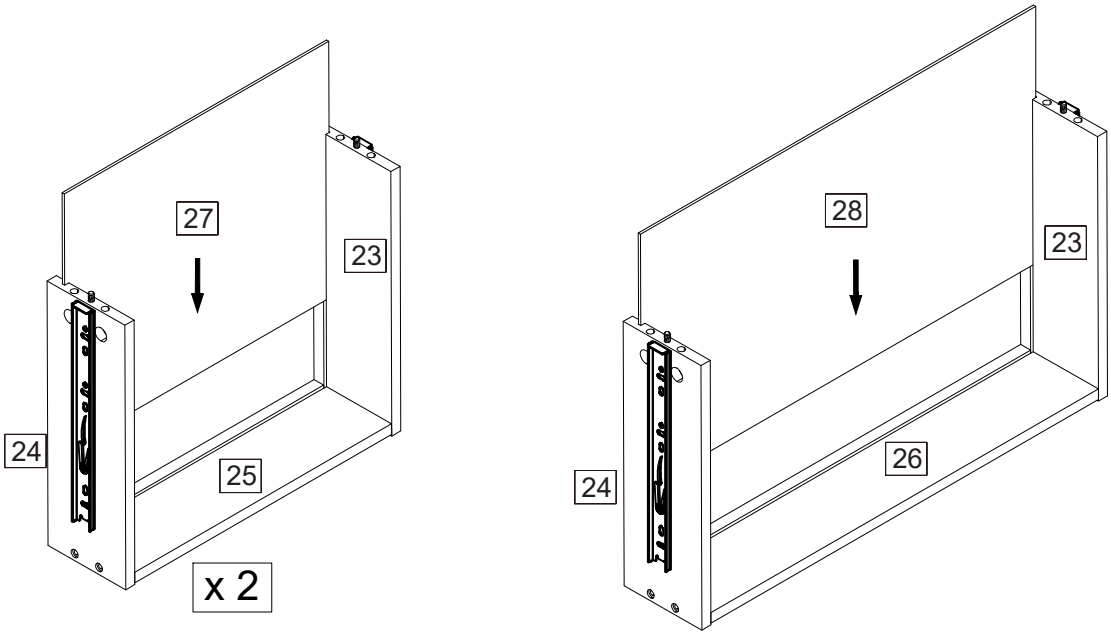

Step 33

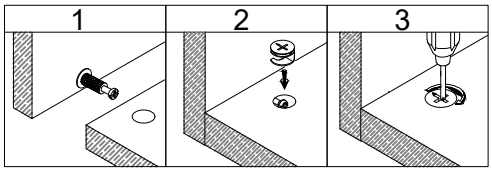

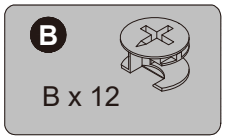



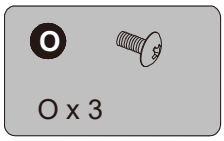

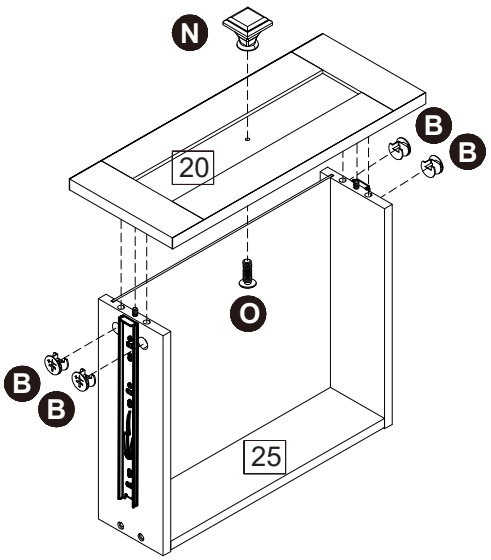

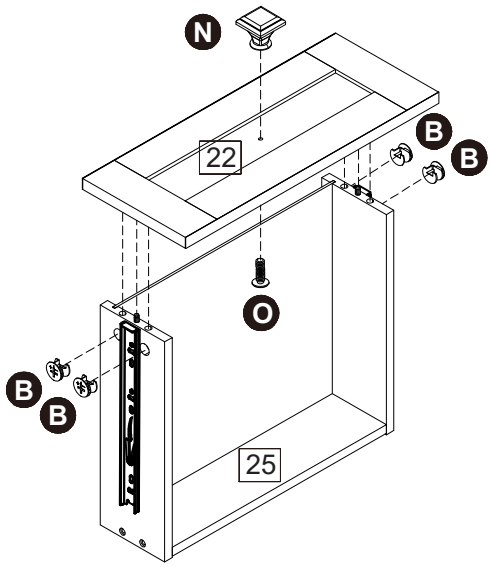

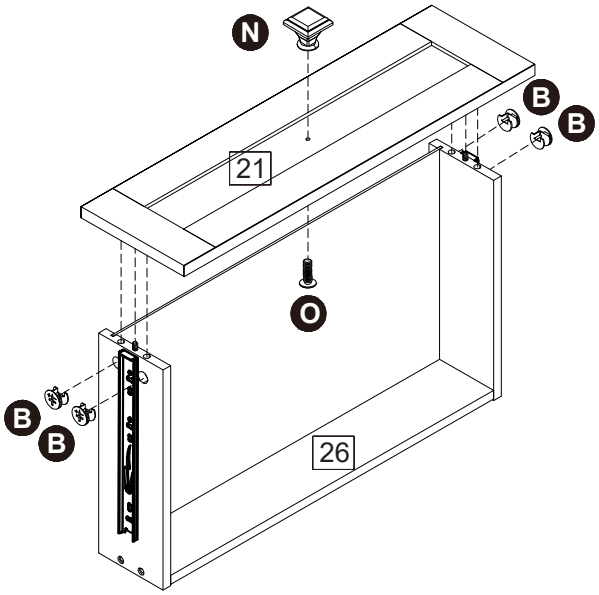

Step 34

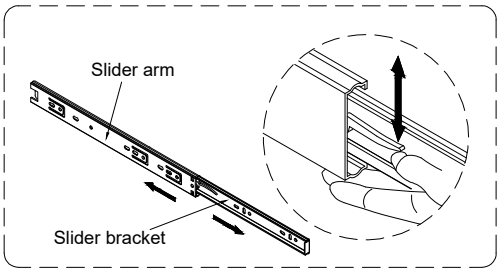

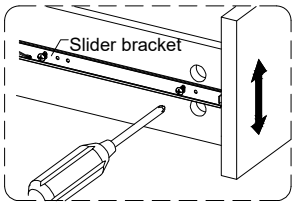

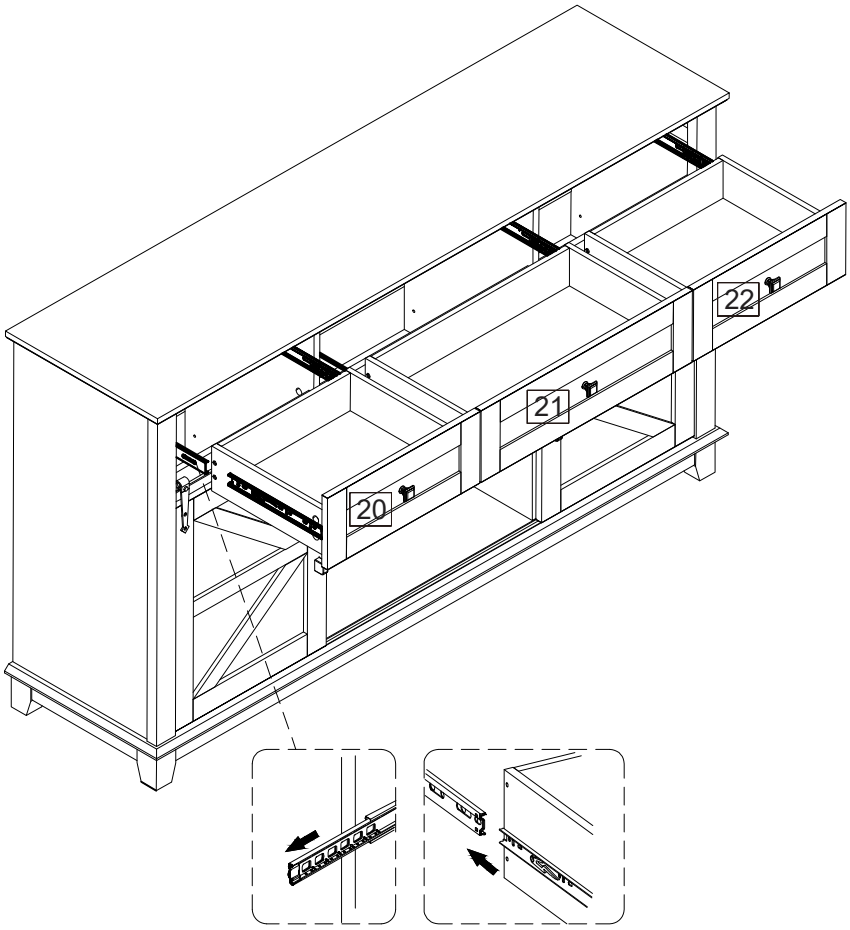

Assembly Instructions

Step 35

