8966-A : Double Glass Shelf with Rail

Dimention

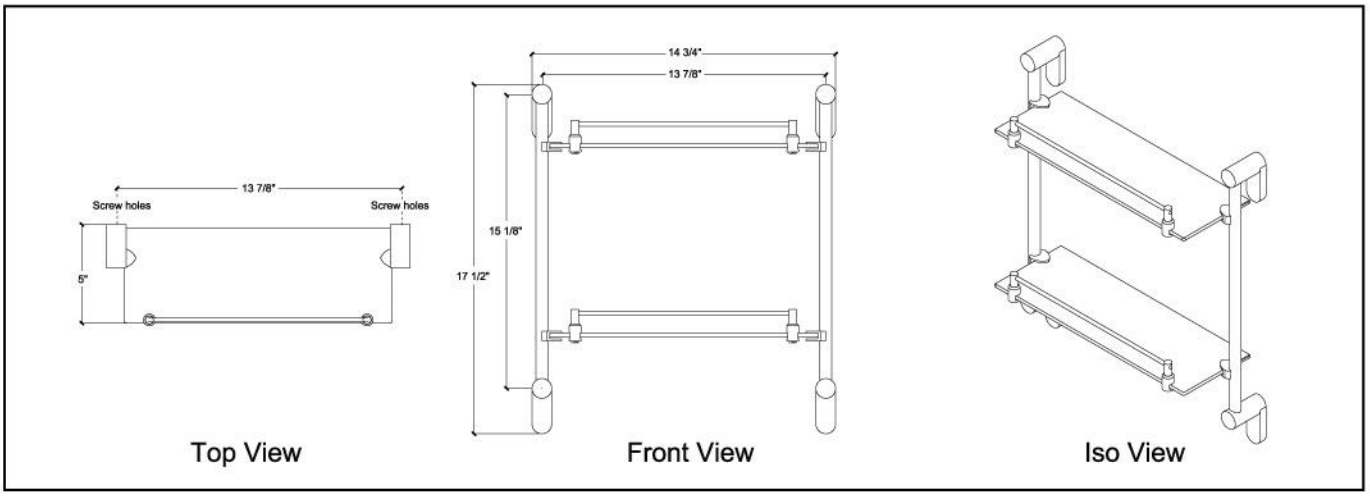

Installation for Drywall and Tile:

1. Using included template,mark screw positions.Use Level to ensure screw positions are level
2. Using Bracket as template mark and drill holes for Screw Anchors.
3. Insert Screw Anchors into holes and attach Brackets with edges outward.
4. Attach Top Bases to Brackets by tilting base upward than pushing bottom of Base flush with wall and using included allan key to tighten small screws at bottom of Bases. Insert long strait bars into bottom of top bases and bottom bases into long strait bars. Attach bottom bases to bottom brackets with long strait bars attached.
5. Insert top glass into top glass holders and tighten glass into place by tightening large screws on holders eves under glass. Then attach bottom glass to bottom glass holders.
6. Attach rails by tightening screws at bottom of rail posts.

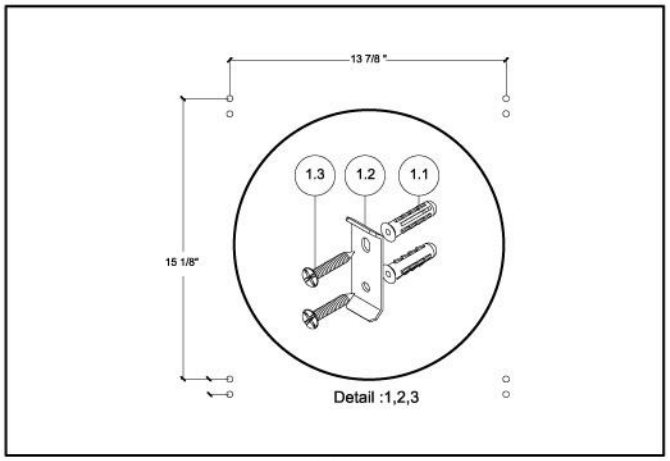

1,2,3

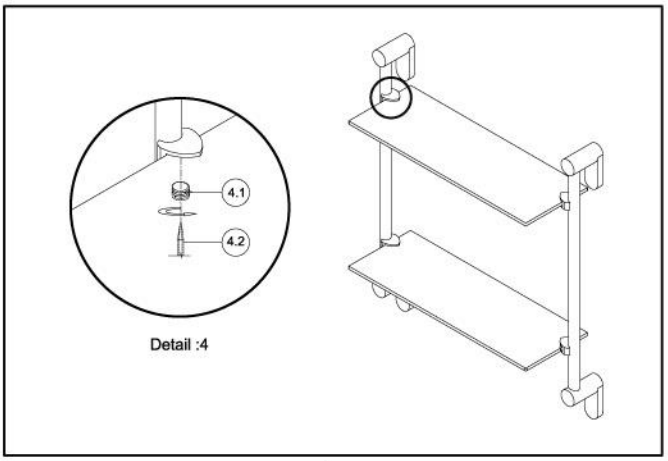

4

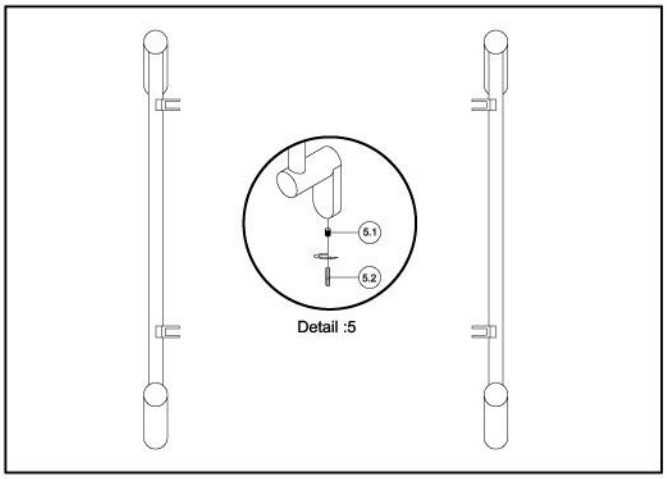

5

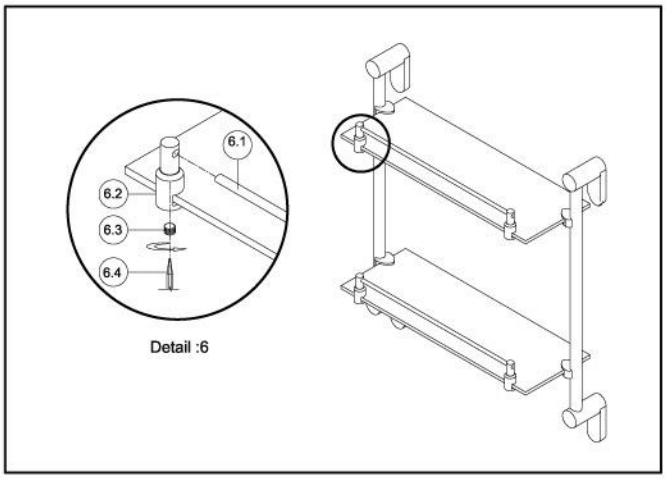

6