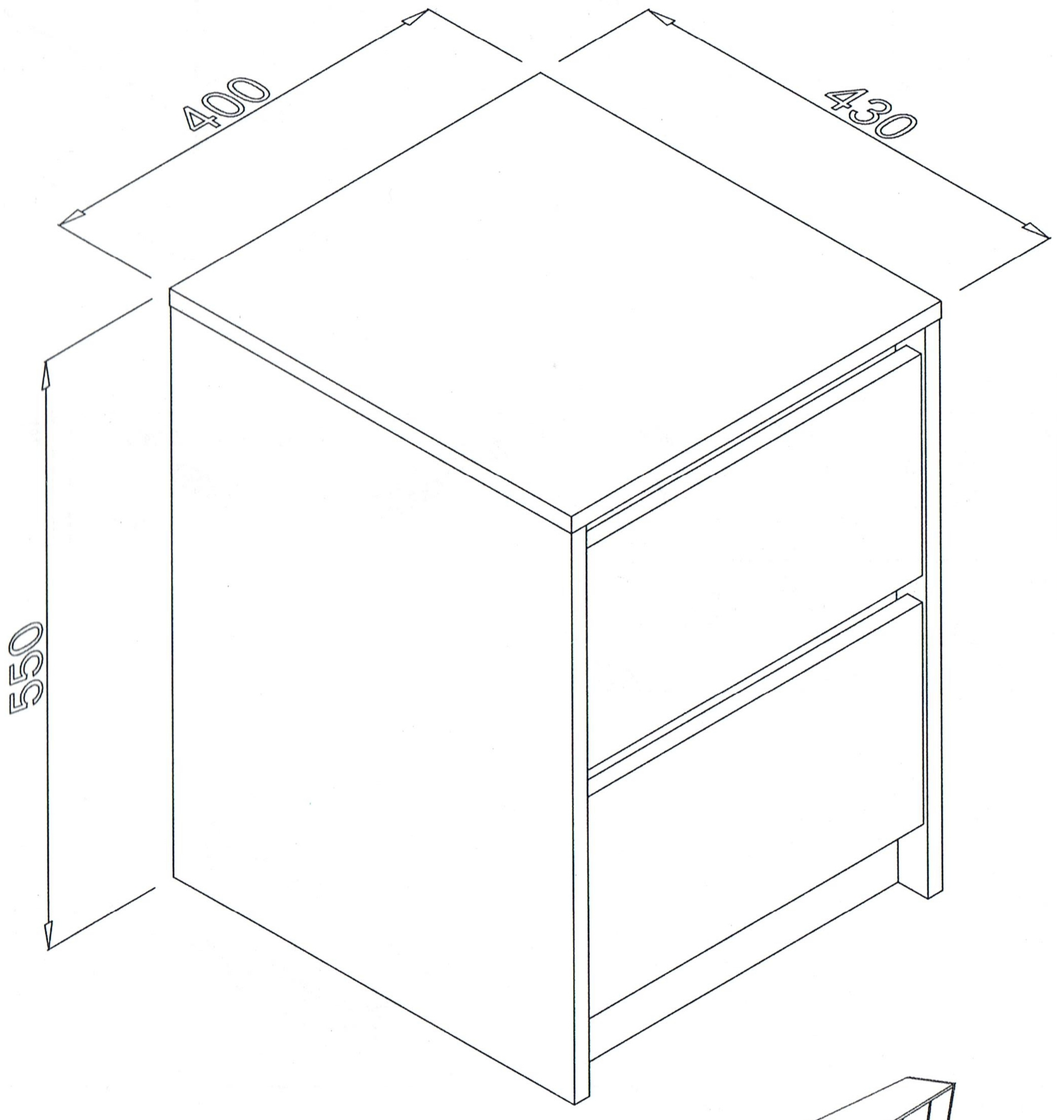
400
430
550

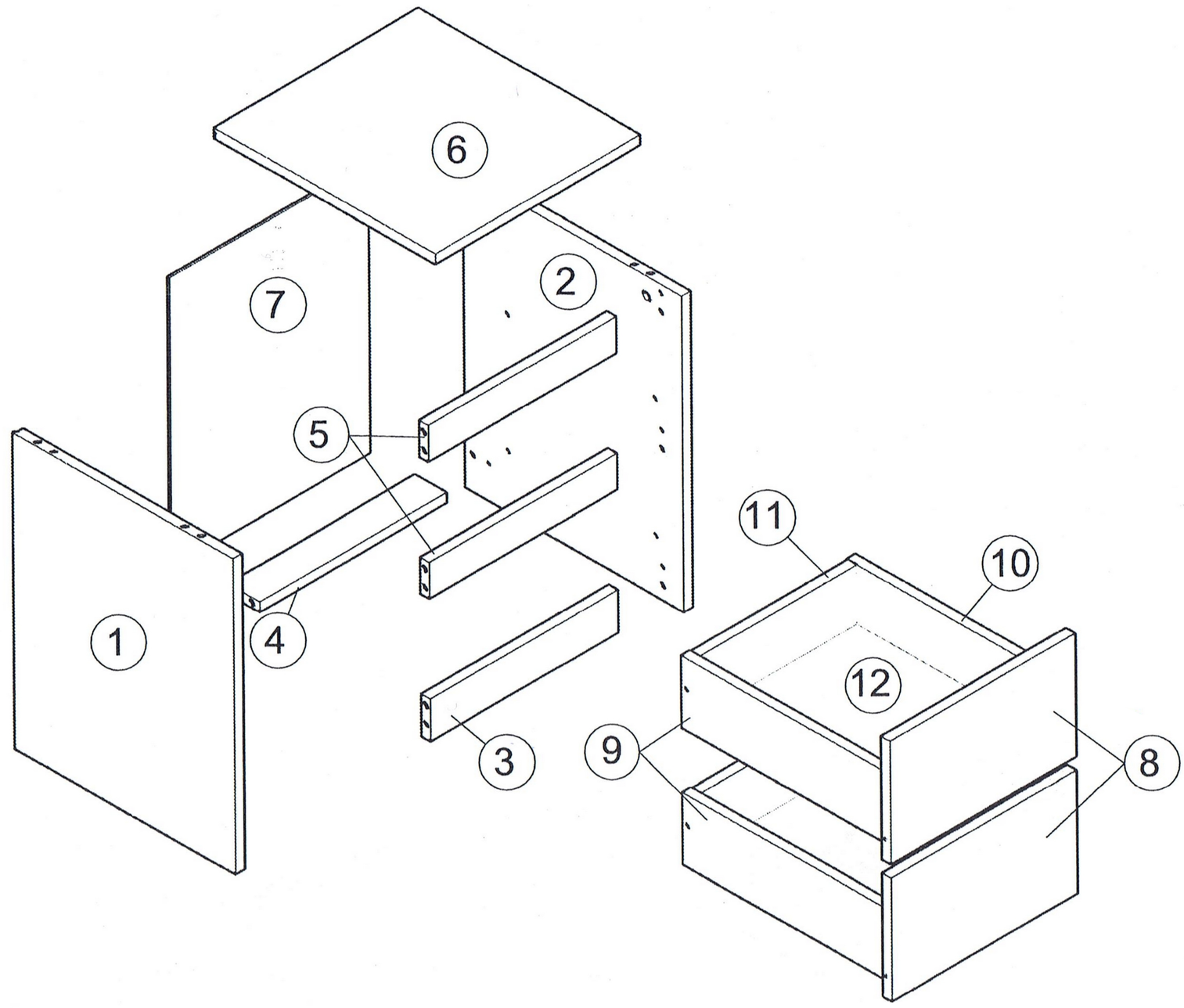
6
7
2
5
1
4
3
11
10
12
9
8

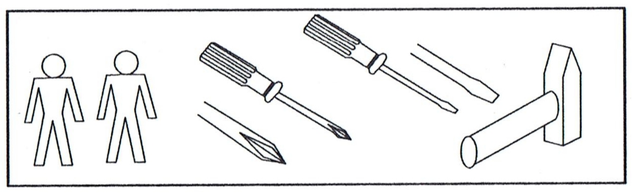

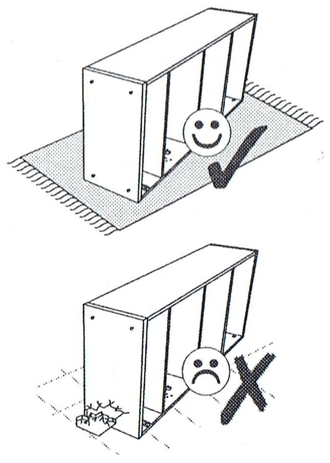

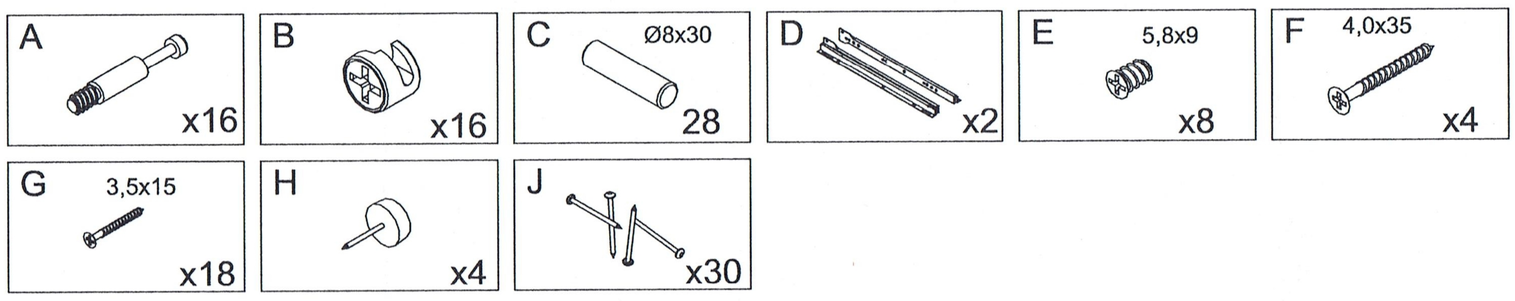
A
x16
B
x16
C
Ø8x30
28
D
x2
E
5,8x9
x8
F
4,0x35
x4
G
3,5x15
x18
H
x4
J
x30

1

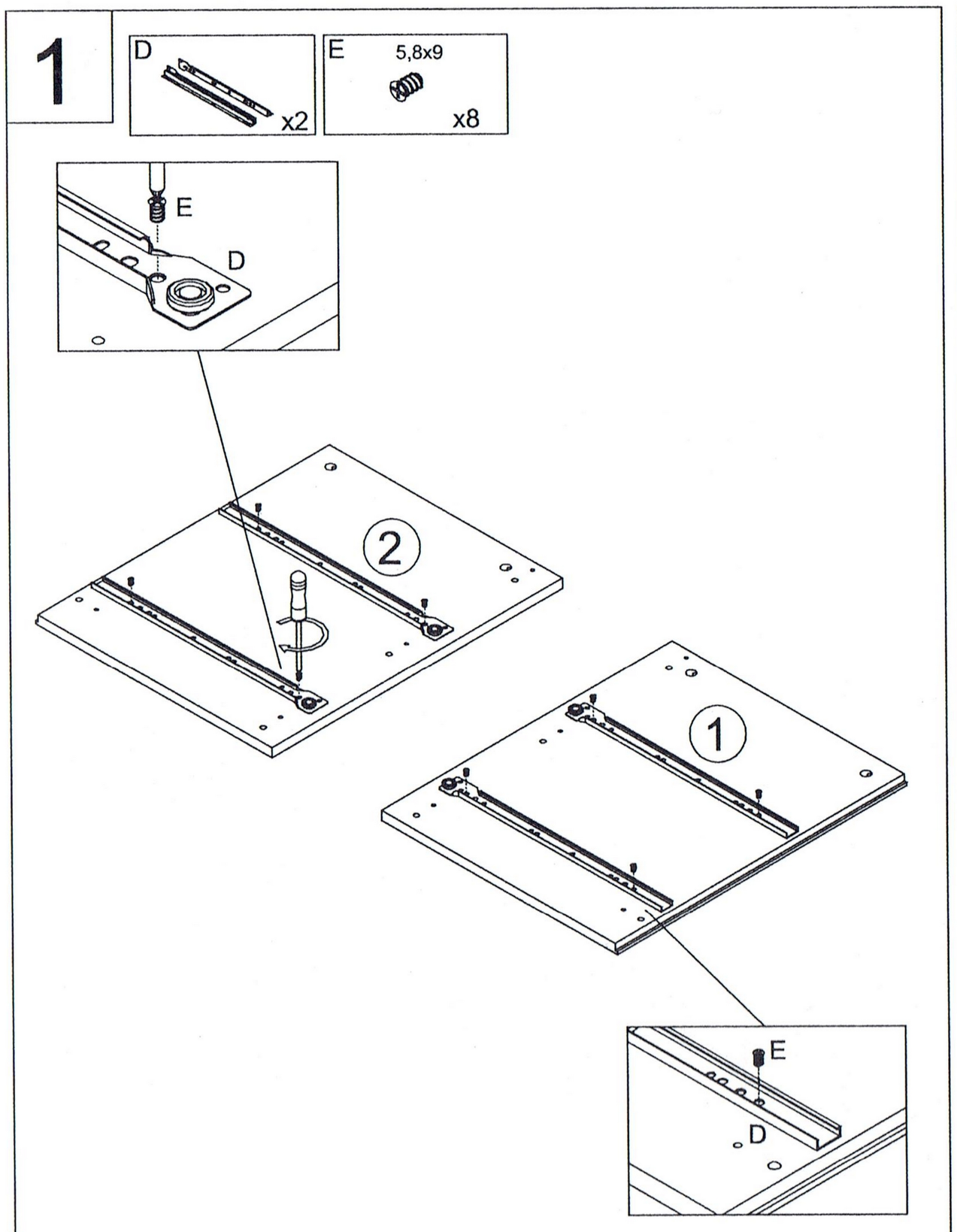
D
x2
E
5,8x9
x8
E
D
2
1
E
D

2

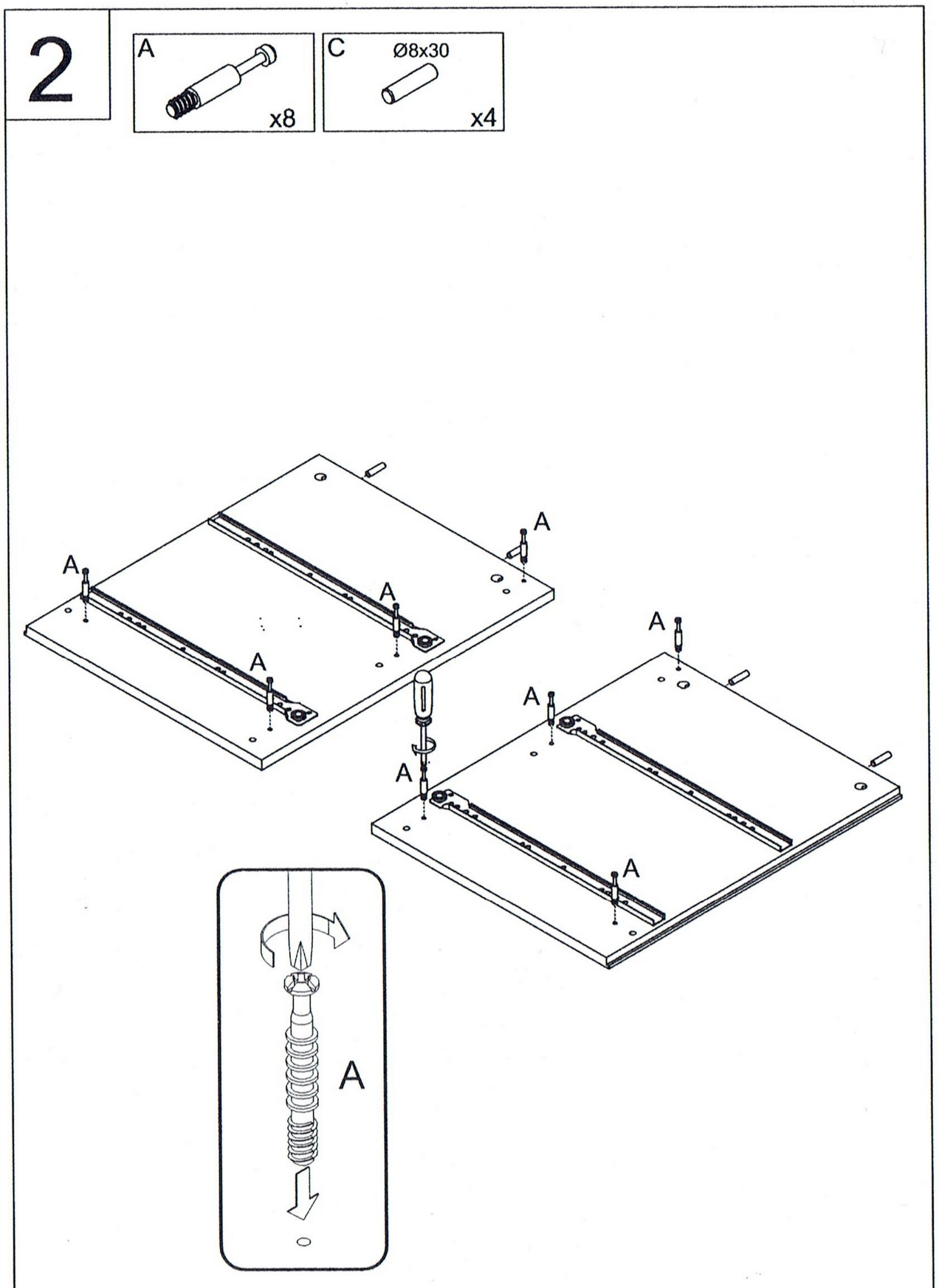
A
x8
C
Ø8x30
x4
A
A
A
A
A
A
A
A
A

3

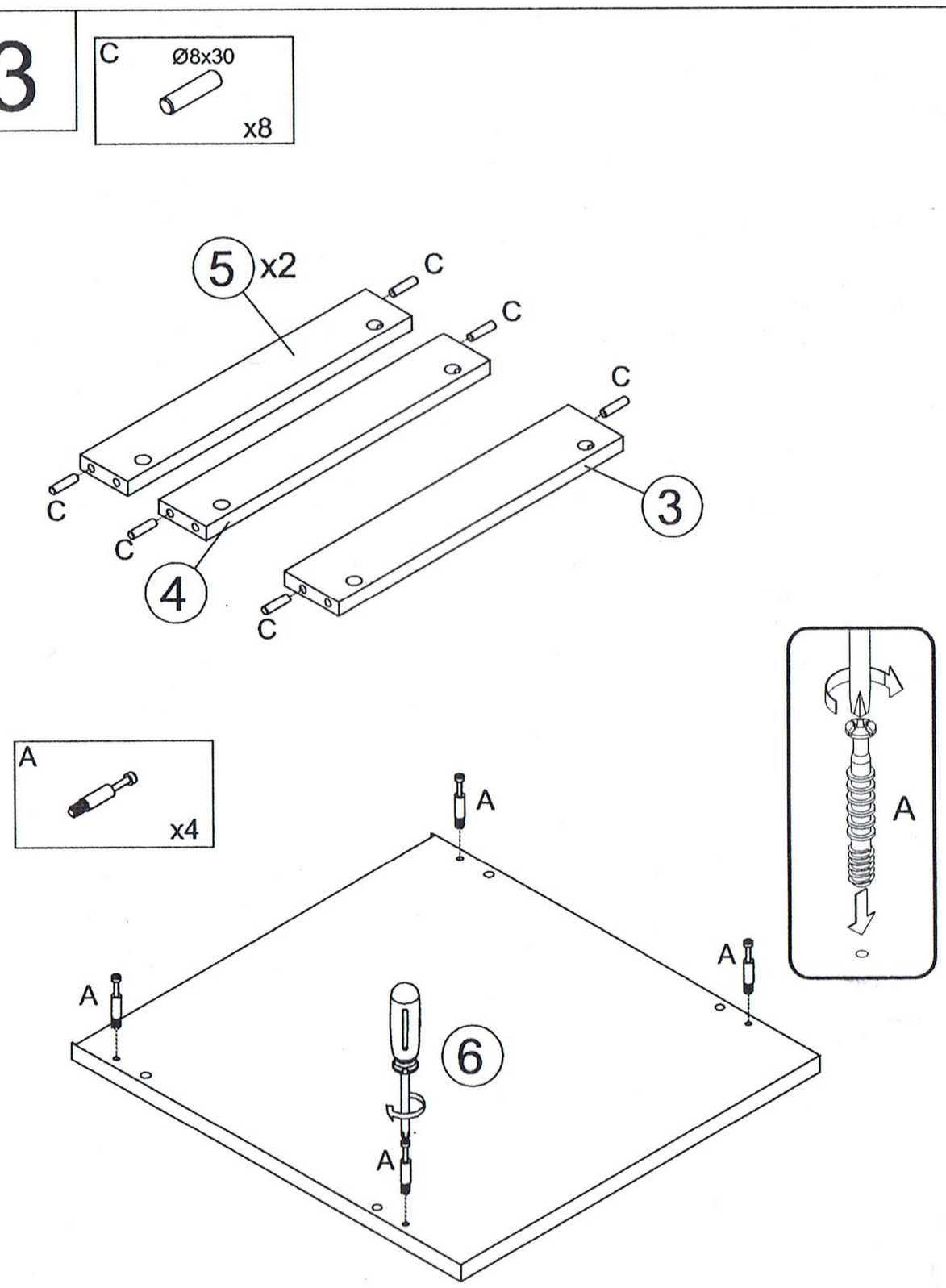
C
Ø8x30
x8
5 x2
C
C
C
C
C
C
3
4
A
x4
A
A
A
A
6
A

4

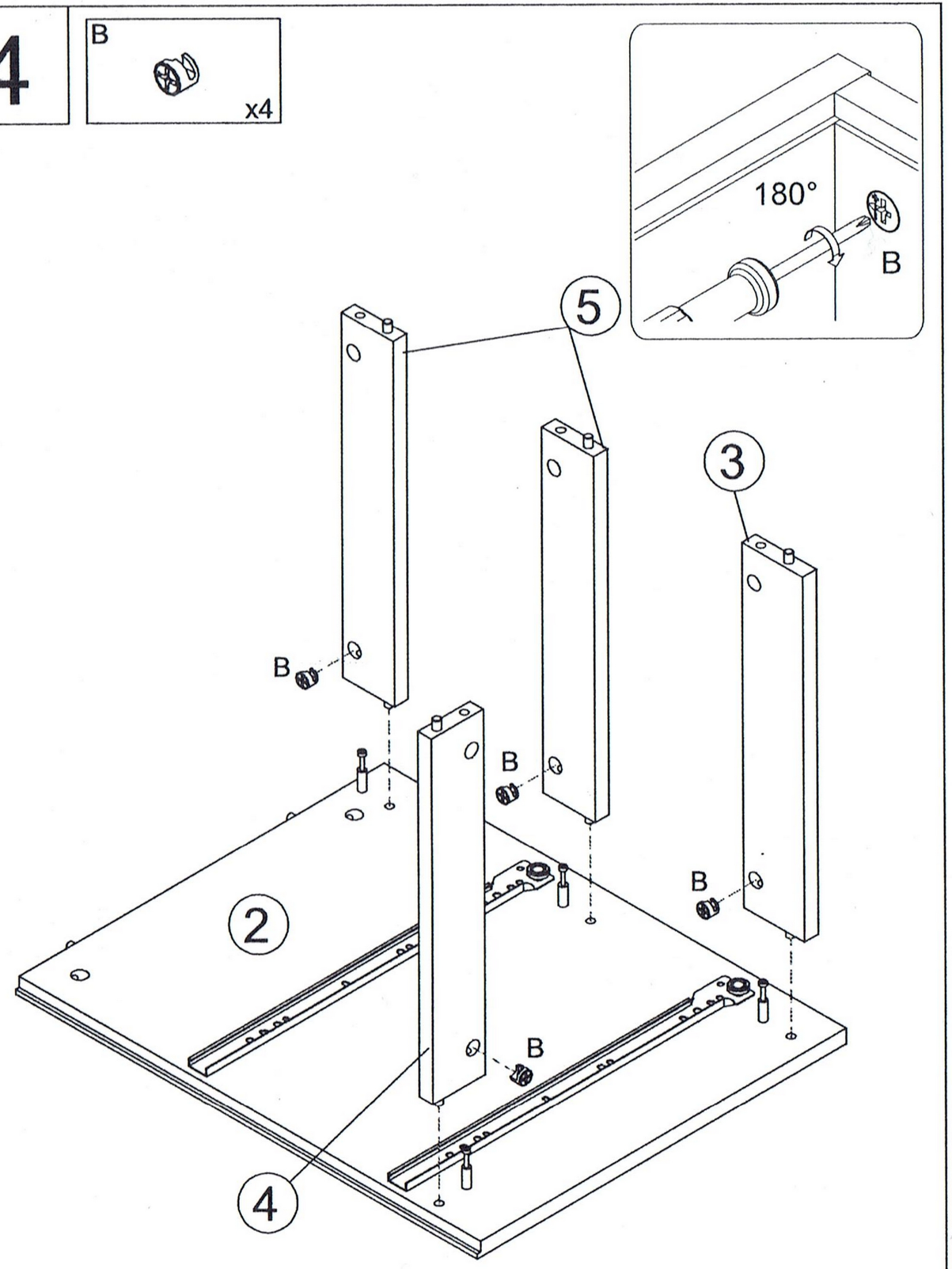
B
x4
180°
B
5
3
B
B
B
2
B
4

5

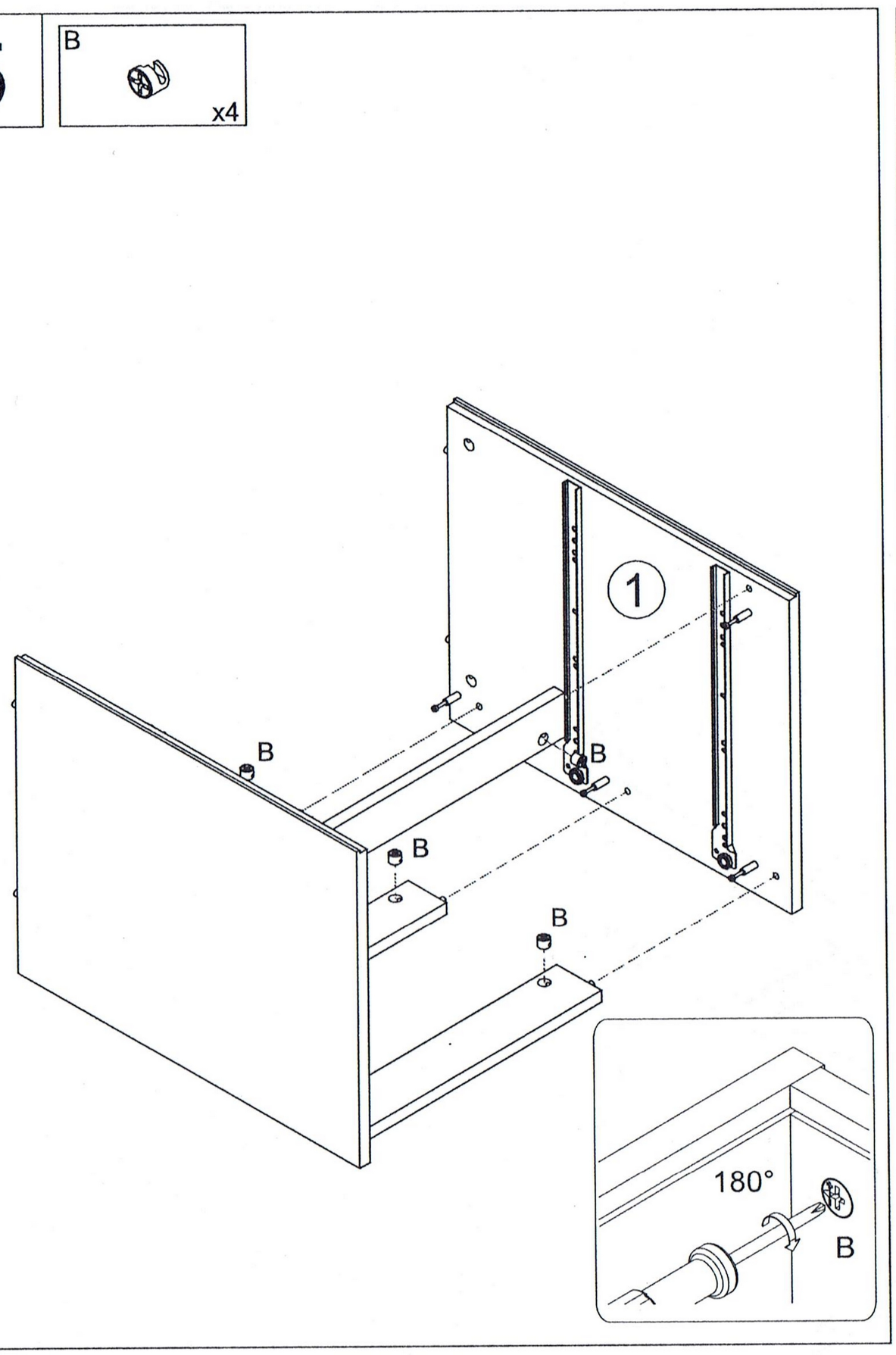
B
x4
1
B
B
B
B
180°
B

6

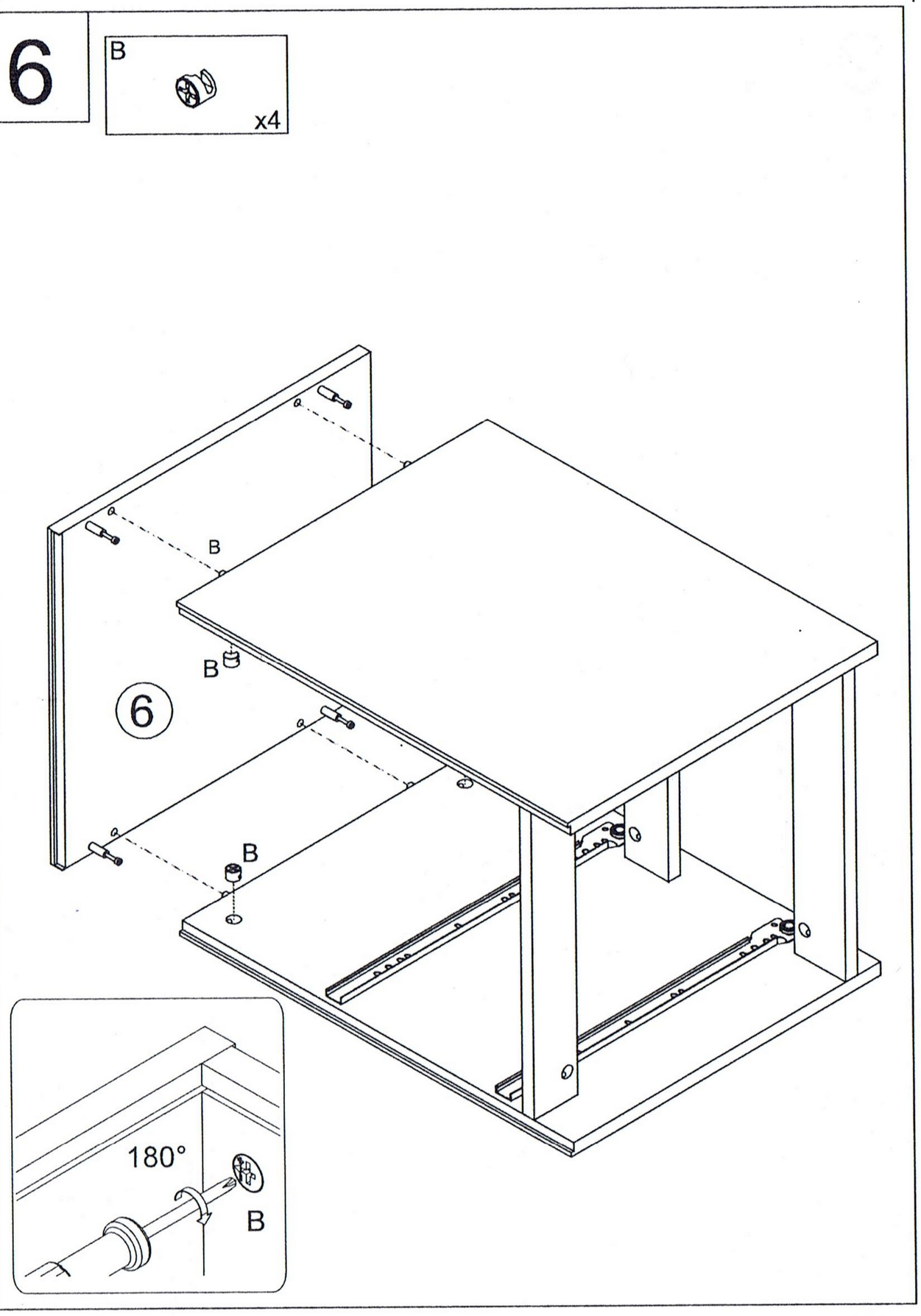
B
x4
B
B
6
B
180°
B

7

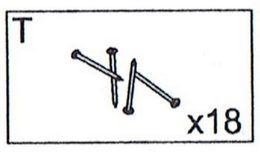
T
x18

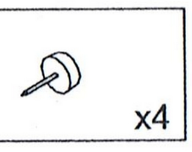
H
x4

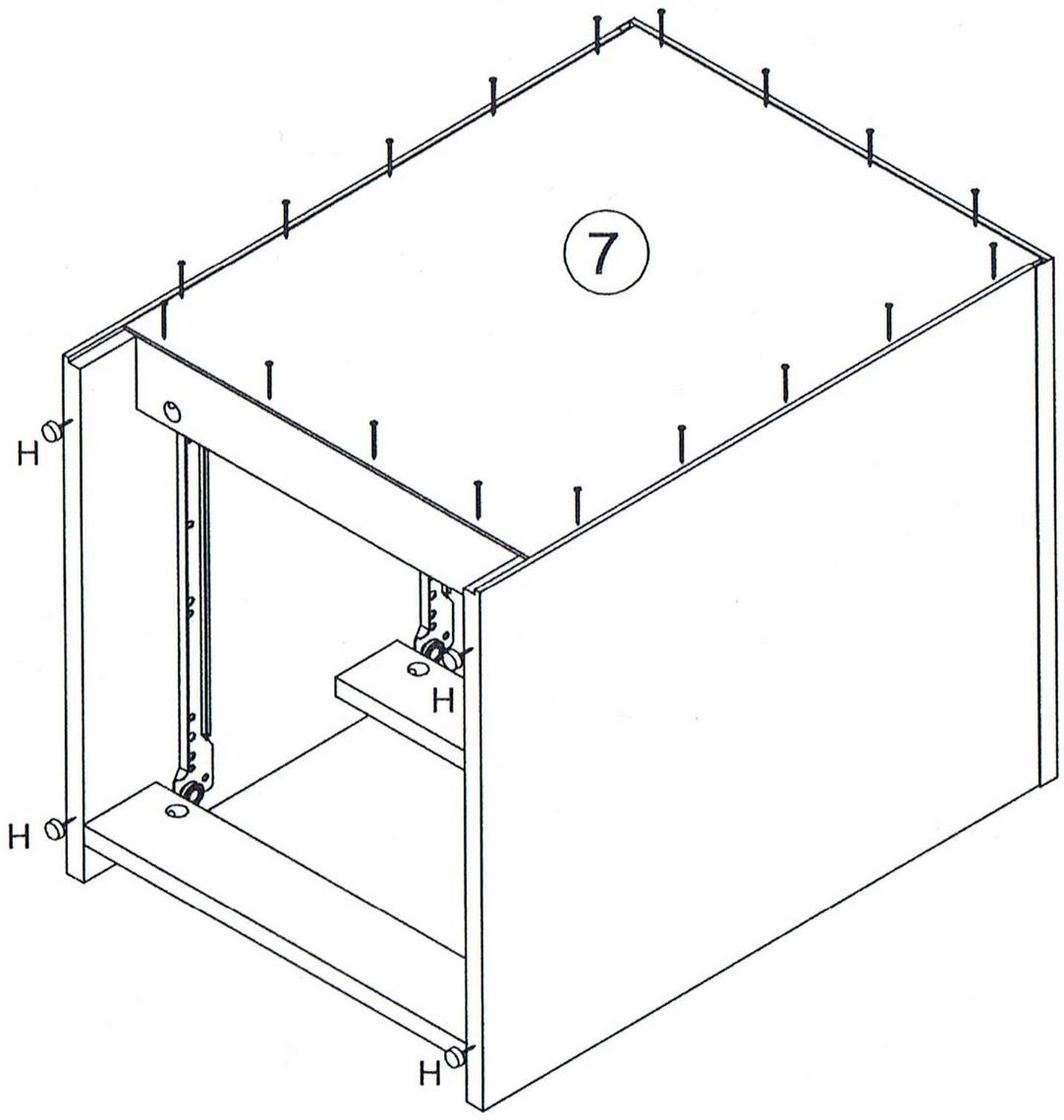
7
H
H
H
H

8

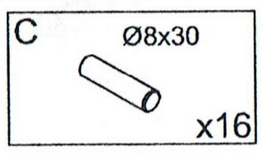
C
Ø8x30
x16

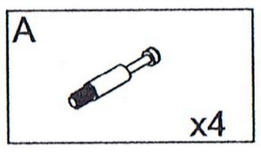
A
x4

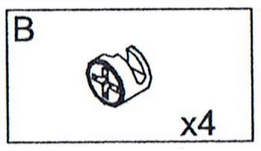
B
x4

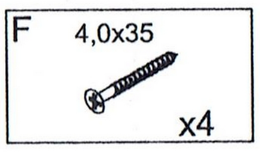
F
4,0x35
x4

x2

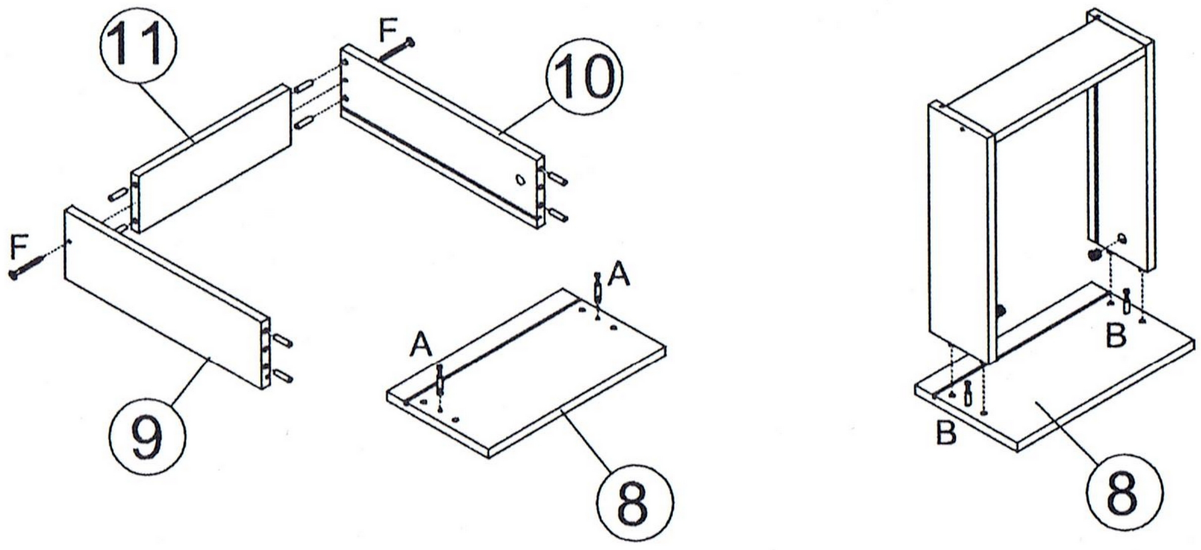
11
F
10
F
9
A
A
8
B
B
8

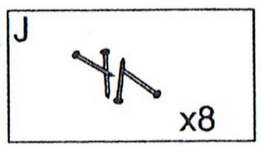
J
x8

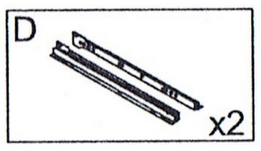
D
x2

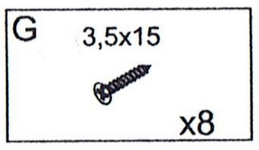
G
3,5x15
x8

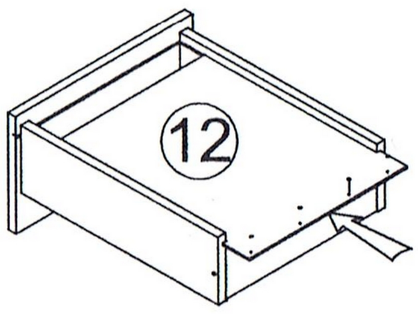
12

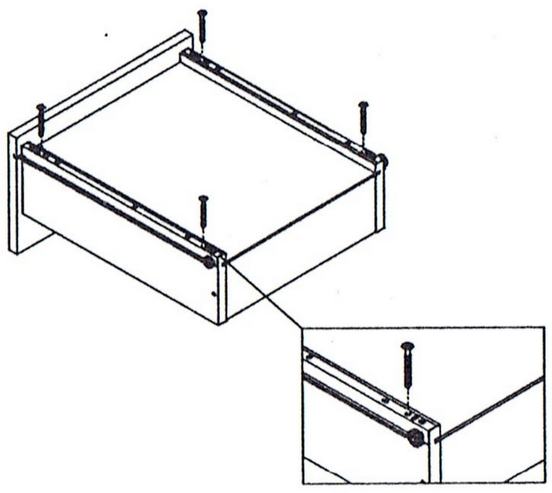
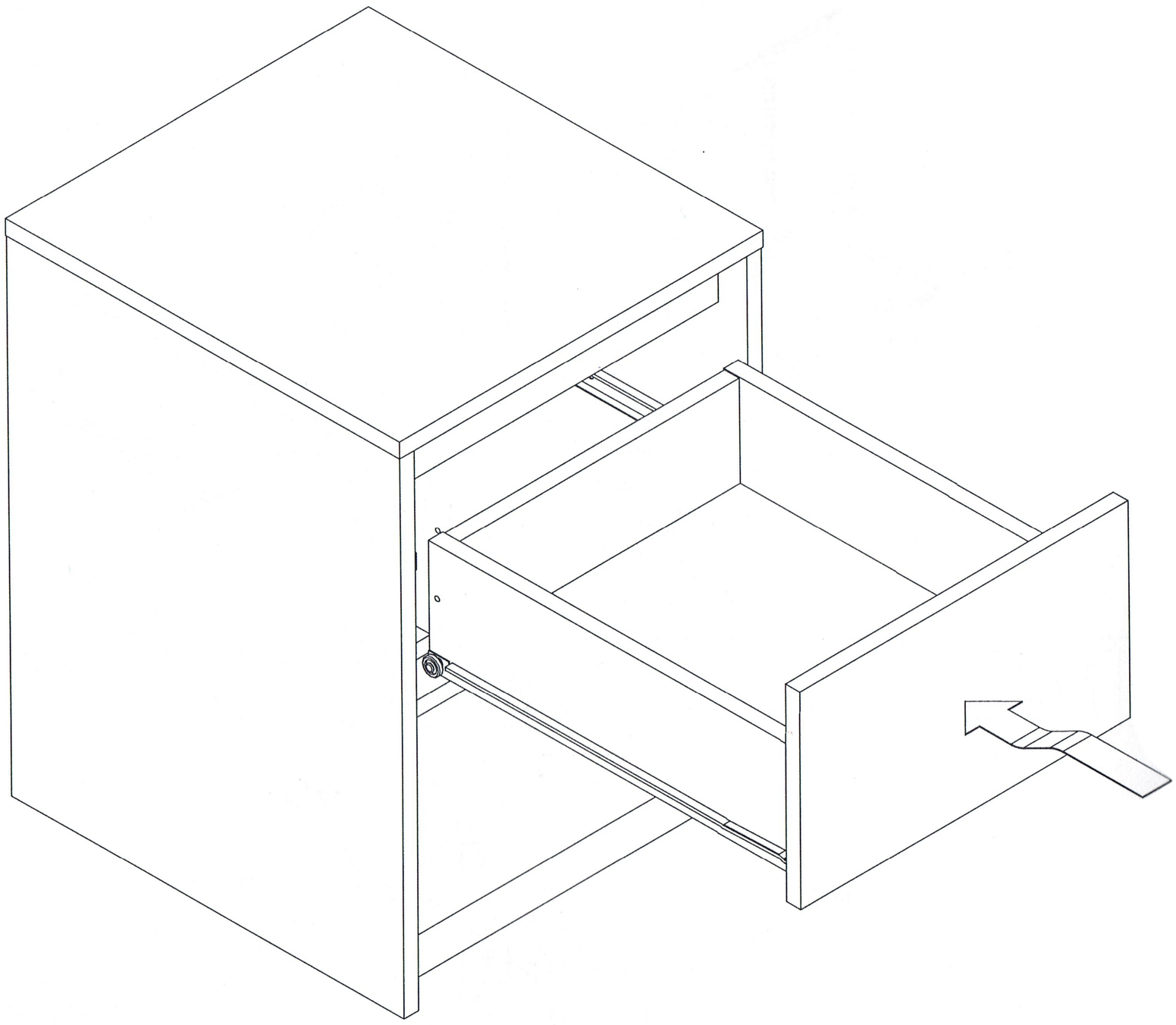
9