ASSEMBLY INSTRUCTIONS

HFSN-781

Ax1

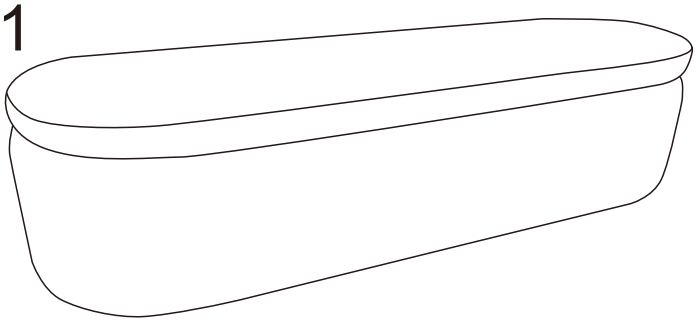

Bx2

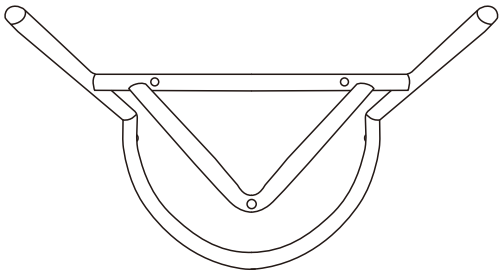

Cx6

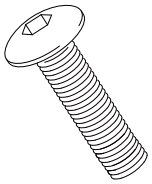

Dx1

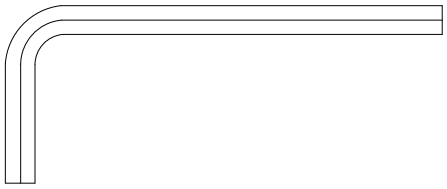

1

PUT ALL THE NAIL ON HOLE ,
THEN TIGHTEN ONE BY ONE

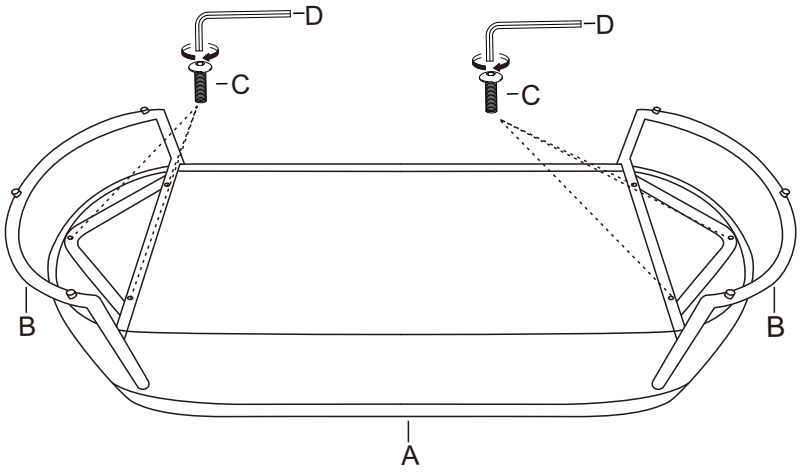

2

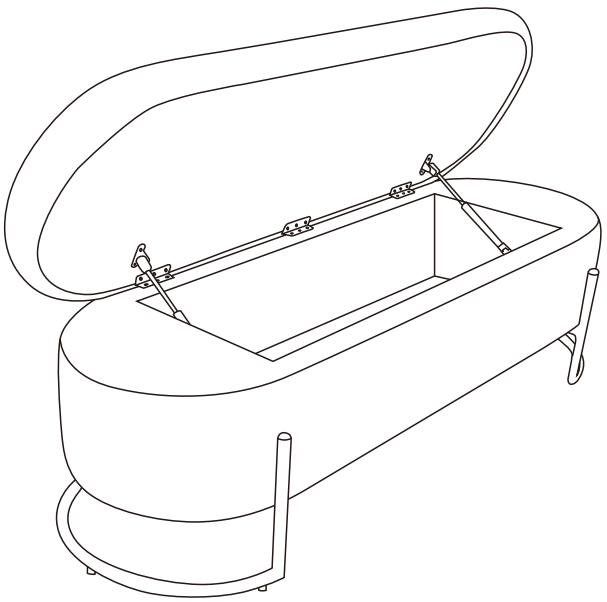

3

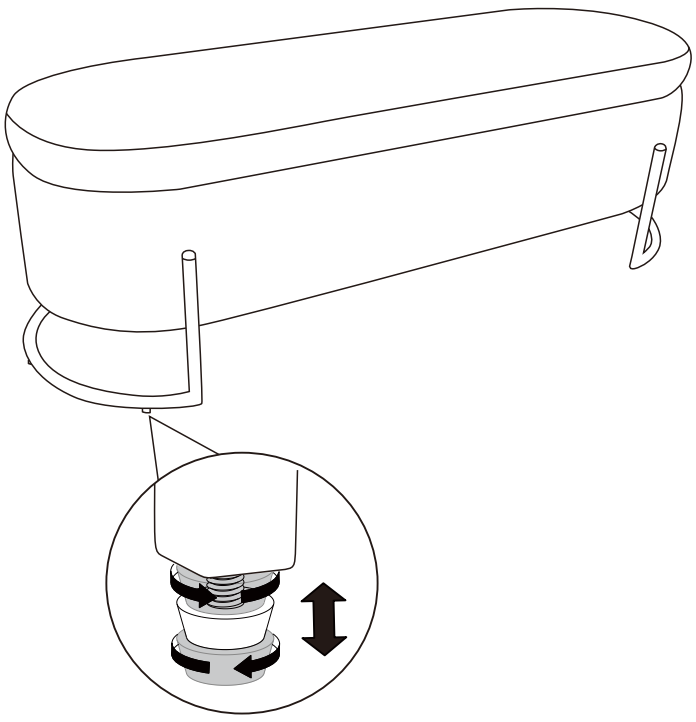

Adjustable leveler