LuxenHöme

Instruction Manual

Please save this manual for future reference.

Product Name:	Natural Rubberwood with White Leather Low Profile Armless Accent Chair, Set of 2
SKU #:	WHIF2109

Thank you for purchasing this LuxenHöme product. This product has been manufactured with the highest standards of safety and quality.

PLEASE READ ALL INSTRUCTIONS CAREFULLY BEFORE ASSEMBLY.
Unpack all parts from the packaging inside the carton to ensure there are no missing or damaged parts. Place all wooden furniture parts on a clean, flat and soft surface to prevent scratches. Refer to the steps provided below for assembly.

Do not attempt to assemble or use the product if any parts are missing or damaged.

PART LIST		
ITEM	DESCRIPTION	QTY
A	Backrest	1 SET
B	Seat	1 SET
C	Stretcher	2 PCS
D	Side Leg (Right & Left)	2 SET
E	Back Leg (Right & Left)	2 PCS

HARDWARE LIST		
ITEM	DESCRIPTION	QTY
1	JCBC Screw M6 x 35mm	14 PCS
2	JCBC Screw M6 x 100mm	4 PCS
3	Spring Washer M6 x 13mm	18 PCS
4	Allen Key M4 x 110mm	1 PCS
5	Wood Dower M8 x 30mm	4 PCS
6	Wood Button	4 PCS
7	Foot Pad	4 PCS

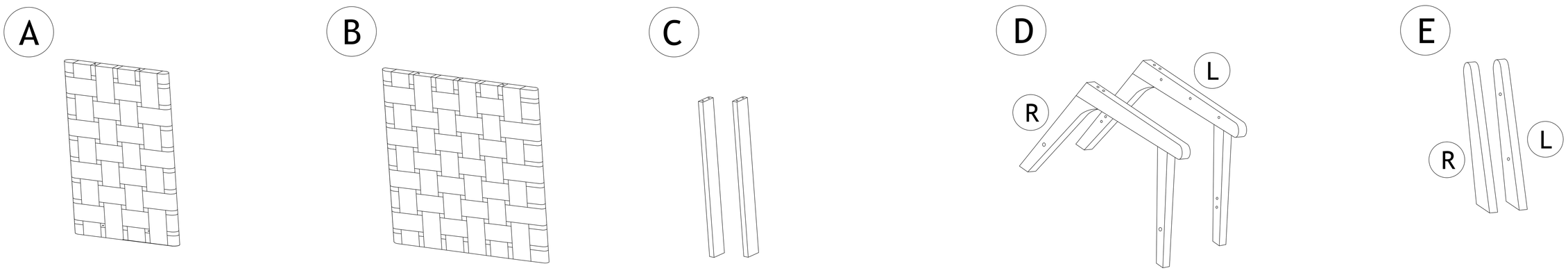

STEP 1

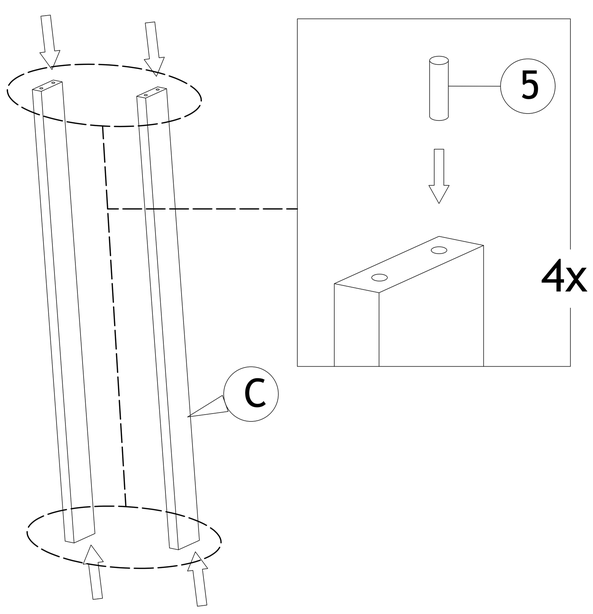

STEP 2

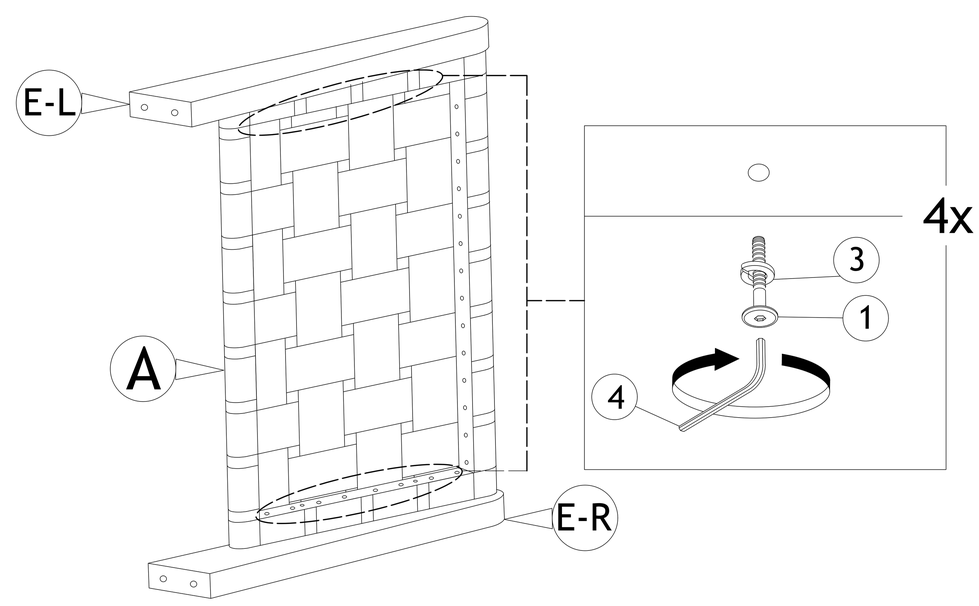

STEP 3

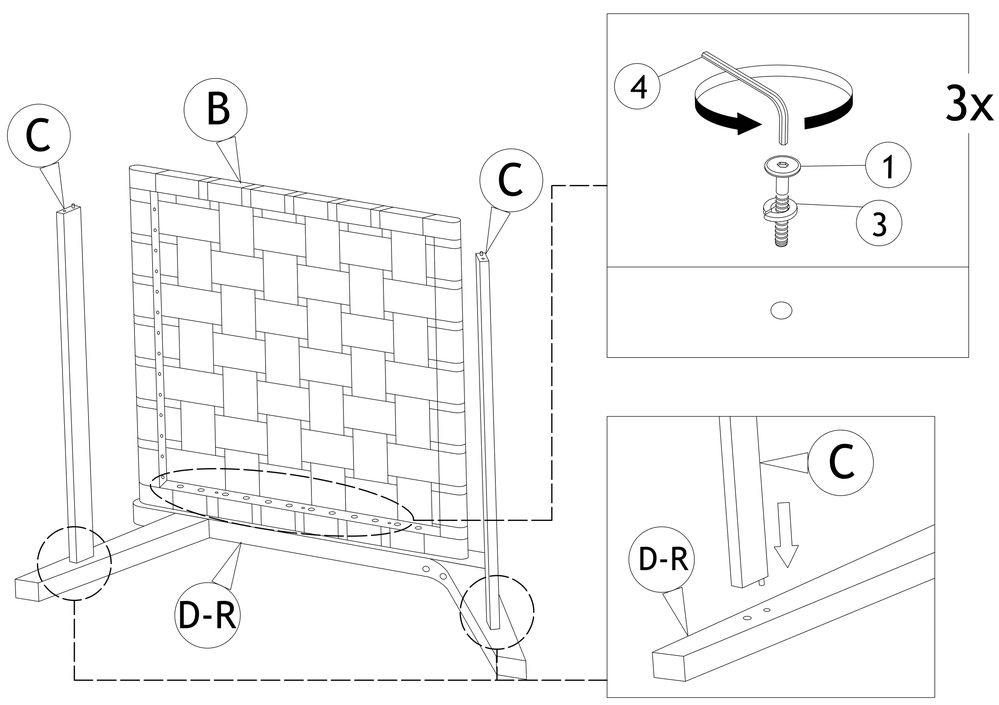

STEP 4

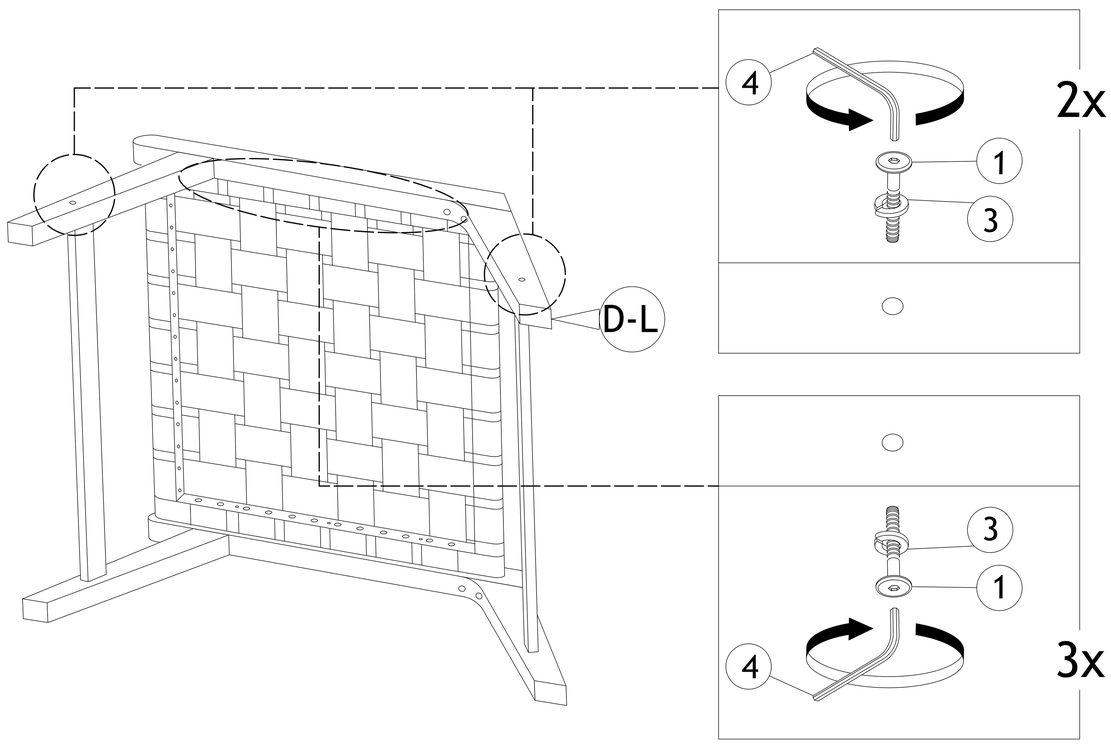

STEP 5

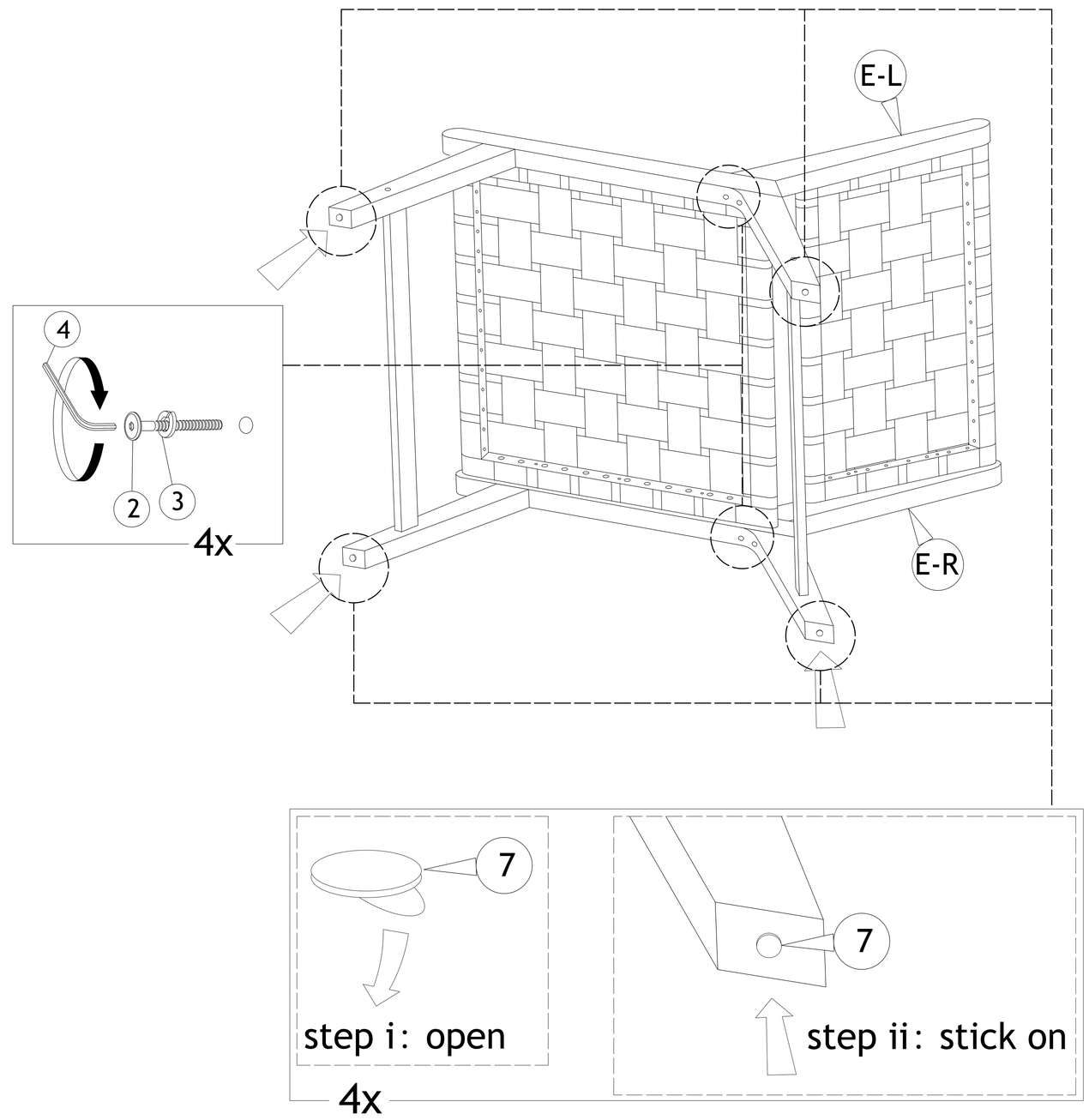

STEP 6

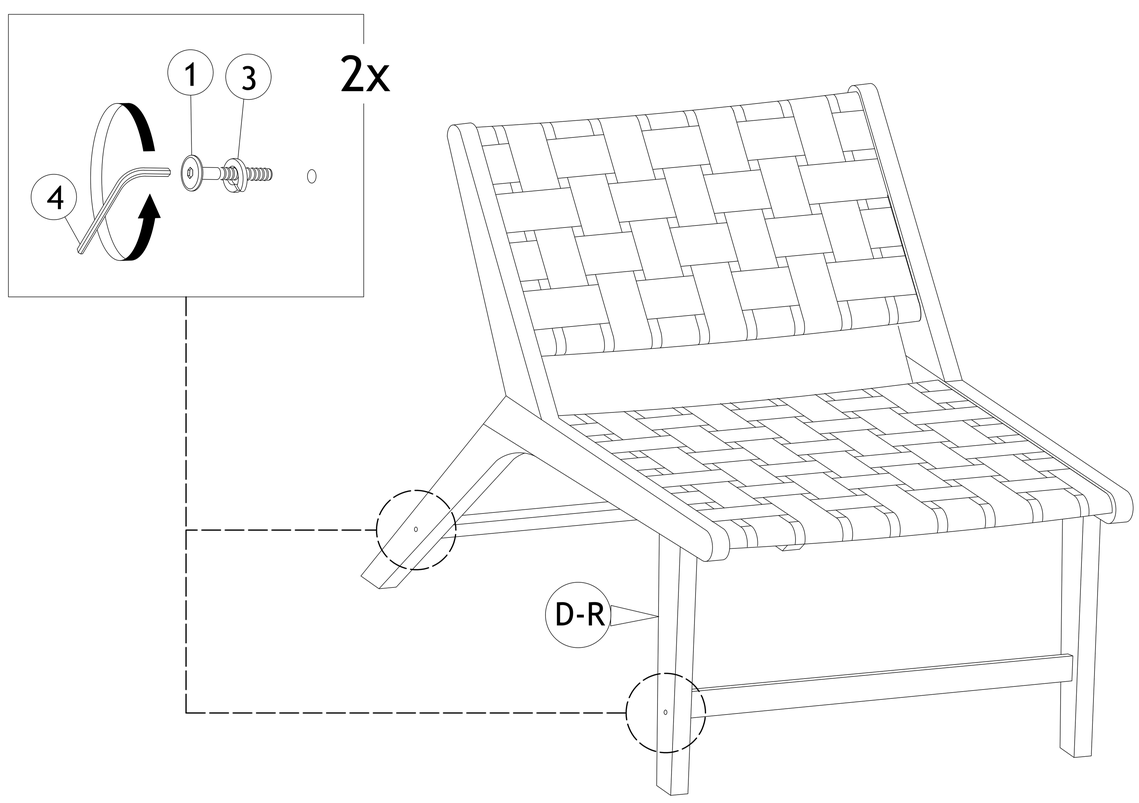

STEP 7

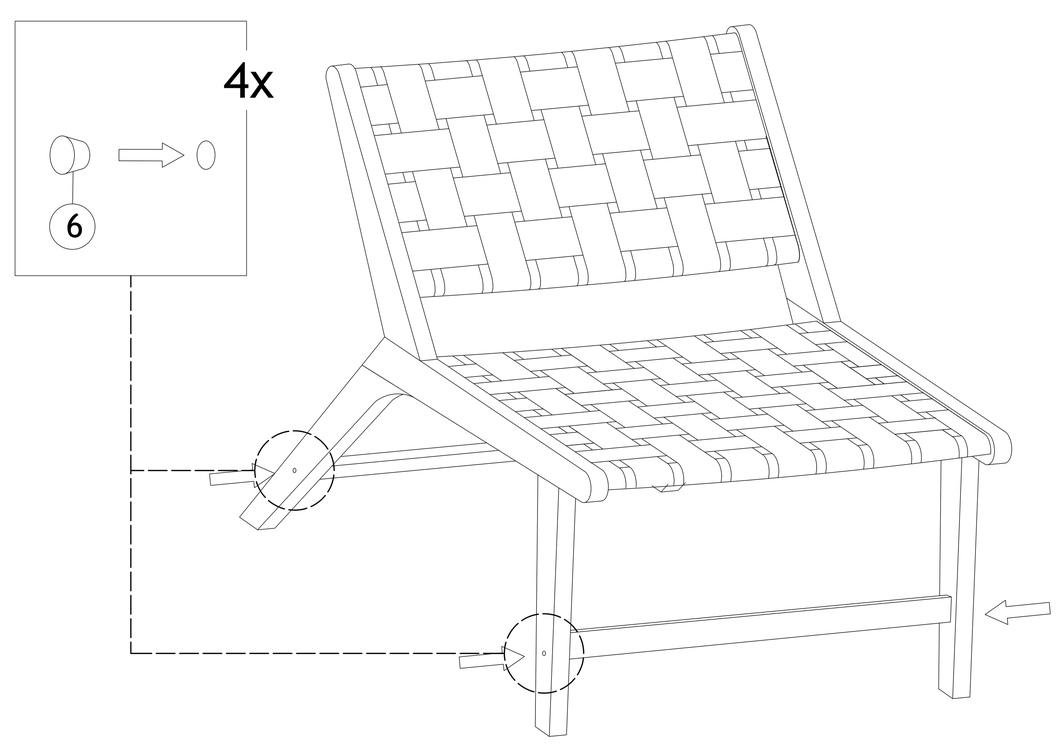

COMPLETED ASSEMBLY