Pine Triple Sleeper

Assembly Instructions – Please keep for future reference

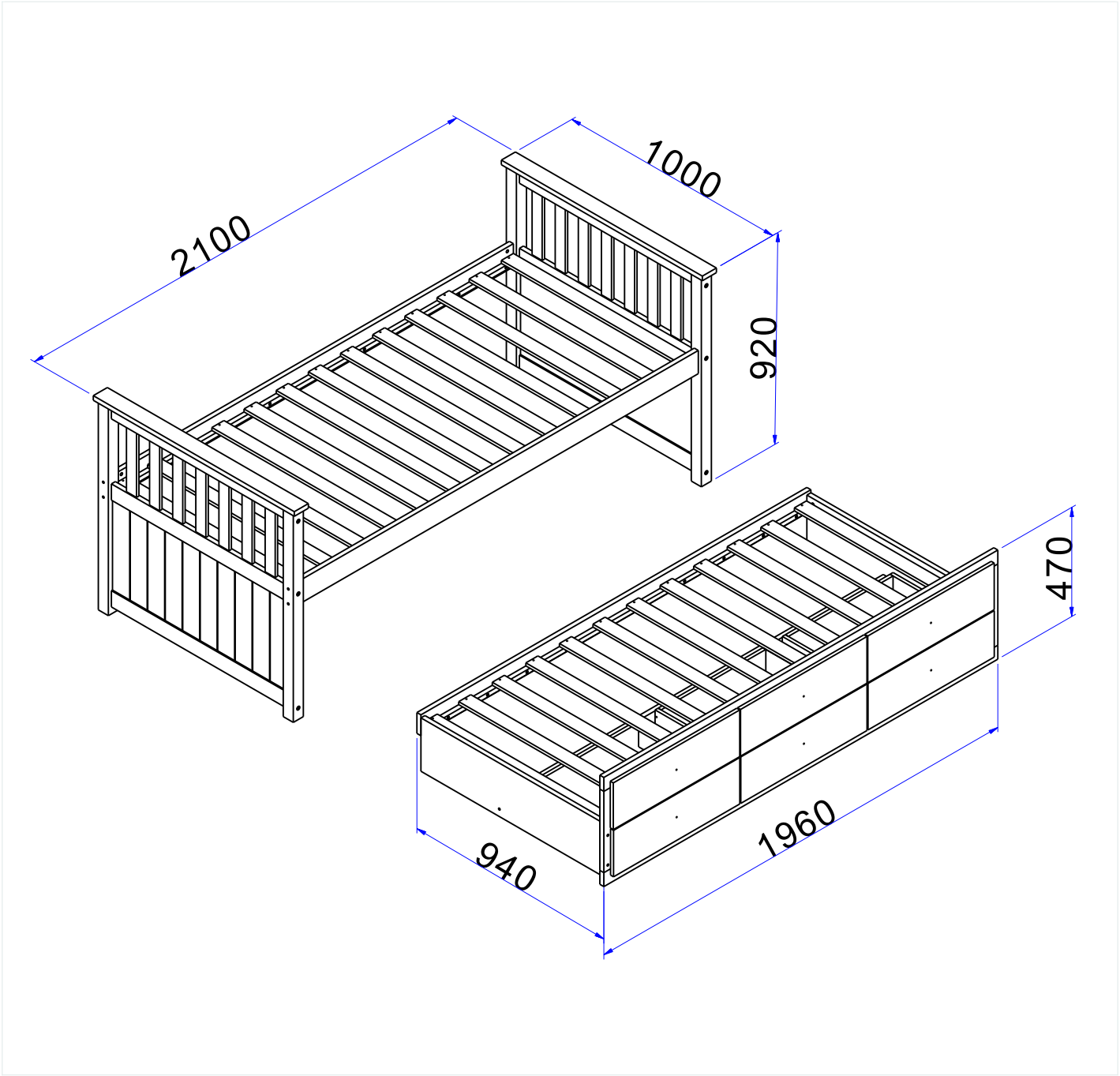

Dimensions	No. people	Assembly Time	OW #
Width: 210 cm Depth: 100 cm Height: 92 cm		60 mins (approx.)	BEDFLOCPG

Important

- PLEASE READ THESE INSTRUCTIONS FULLY BEFORE STARTING ASSEMBLY
- PLEASE DO NOT THROW THE PACKAGING AWAY UNTIL YOU ARE SATISFIED WITH PURCHASE, GOODS NEED TO BE RETURNED IN ORIGINAL PACKAGING.

⚠ Safety and Care Advice

Important

- PLEASE READ THESE INSTRUCTIONS FULLY BEFORE STARTING ASSEMBLY
- PLEASE DO NOT THROW THE PACKAGING AWAY UNTIL YOU ARE SATISFIED WITH PURCHASE, GOODS NEED TO BE RETURNED IN ORIGINAL PACKAGING.

- Check you have all the components and tools listed on pages 4 and 5.
- Remove all fittings from the plastic bags and separate them into their groups.
- Keep children and animals away from the work area, small parts could choke if swallowed.
- Make sure you have enough space to lay out the parts before starting.
- Do not stand or put weight on the product, this could cause damage.
- Assemble the item as close to its final position (in the same room) as possible.



- Assemble on a soft, level surface to avoid damaging the unit or your floor.
- We do not recommend the use of power drill/drivers for inserting screws, as this could damage the unit. Only use hand screwdrivers.
- Dispose of all packaging carefully and responsibly.

Care and Maintenance

- Only clean using a damp cloth and mild detergent, do not use bleach or abrasive cleaners.
- From time to time check that there are no loose screws on this unit.
- This product should not be discarded with household waste. Take to your local authority waste disposal centre.

If kept outside please ensure in the winter months that the product is correctly covered or put away into a dry environment to prevent corrosion, weathering or damage.

If your product is not designed to be outside, we recommend that it is always kept indoors in a dry environment.

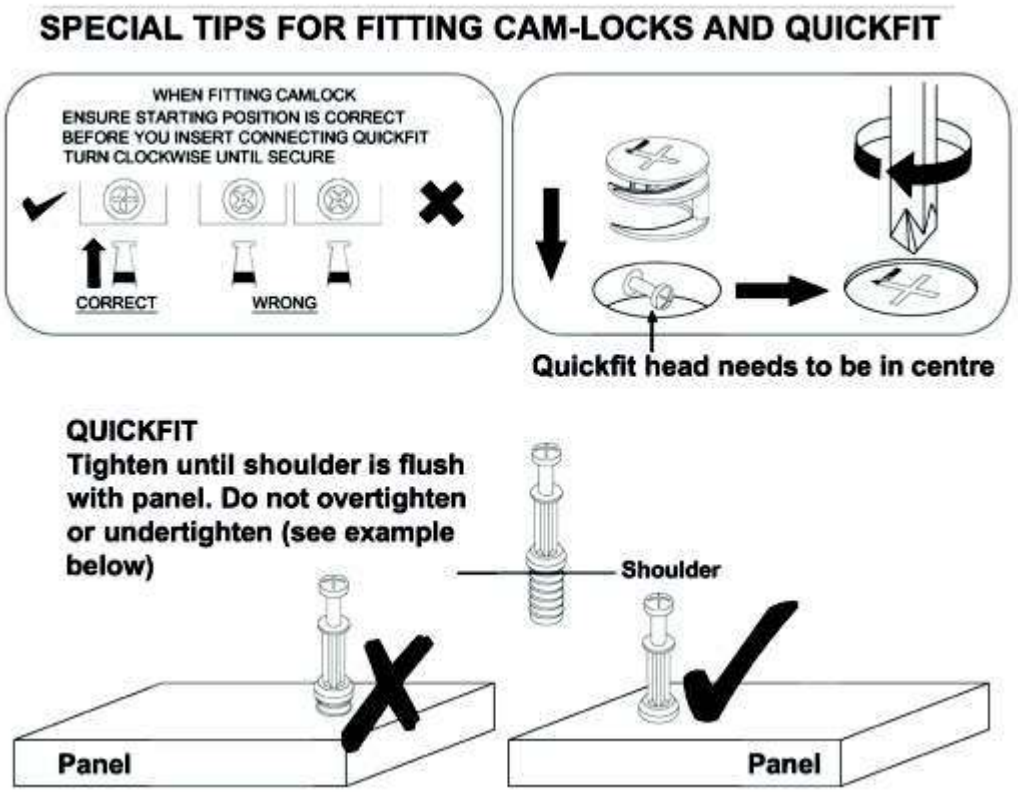

If you are unhappy with the product and wish to return it, please follow the retailer's returns procedure.

Exploded View

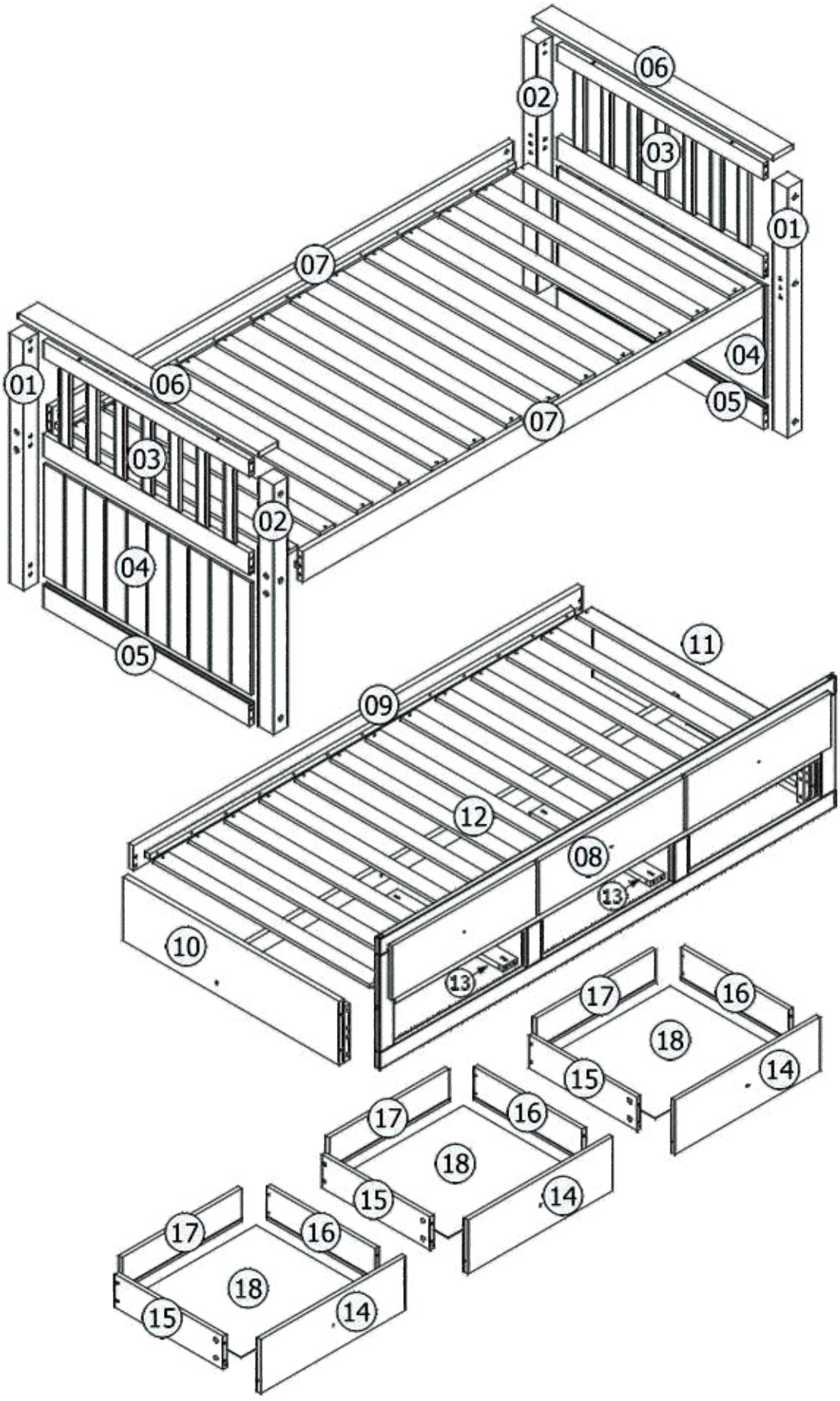

Components - Panels

Please check that you have all the components listed below before constructing your item.

Part No	Description	Qty	Size (mm)	Thickness (mm)
1	Leg	2	900x50	50
2	Leg	2	900x50	50
3	Headboard	2	870x410	20
4	Headboard Central Panel	2	880x400	5
5	Bottom Rail	2	870x70	20
6	Top Layer	2	1000x70	20
7	Bed Side	2	1980x100	20
8	Drawers Front	1	1960x470	40
9	Drawer Back	1	1940x90	20
10	Drawer Side	1	900x230	50
11	Drawer Side	1	900x230	50
12	Slats	1	1900x60	20
13	Bottom Support	2	500x60	20
14	Small Drawer Front	3	628x200	15
15	Small Drawer Side	3	450x120	15
16	Small Drawer Side	3	450x120	15
17	Small Drawer Back	3	520x120	15
18	Drawer Bottom	3	530x445	5

Important – Please read these instructions fully before starting assembly

Components - Fixings

Please check that you have all the components listed below before constructing your item.

Note: The quantities below are the correct amount to complete the assembly. In some cases more fittings may be supplied than are required.

(A)	x8 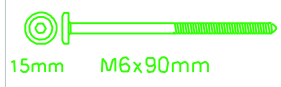 15mm M6x90mm	**(B)**	x12 	**(C)**	x4 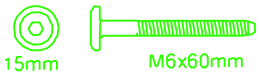 15mm M6x60mm	**(D)**	x4 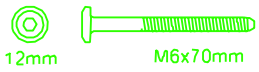 12mm M6x70mm
(E)	x12 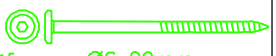 15mm Ø6x90mm	**(F)**	x2  10mm Ø7x60mm	**(G)**	x30  Ø8 x30mm	**(H)**	x6 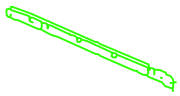 RIGHT OR LEFT
(I)	x6 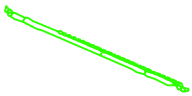 RIGHT OR LEFT	**(J)**	x4 	**(K)**	x6 	**(L)**	x6  M4x20mm
(M)	x12 	**(N)**	x12 	**(O)**	x76  Ø4 x30mm	**(P)**	x36 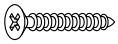 Ø3.5x12mm
(Q)	x16  Ø3x16mm	**(S)**	x2 	**(T)**	x2 		

Assembly Instructions

Step 1

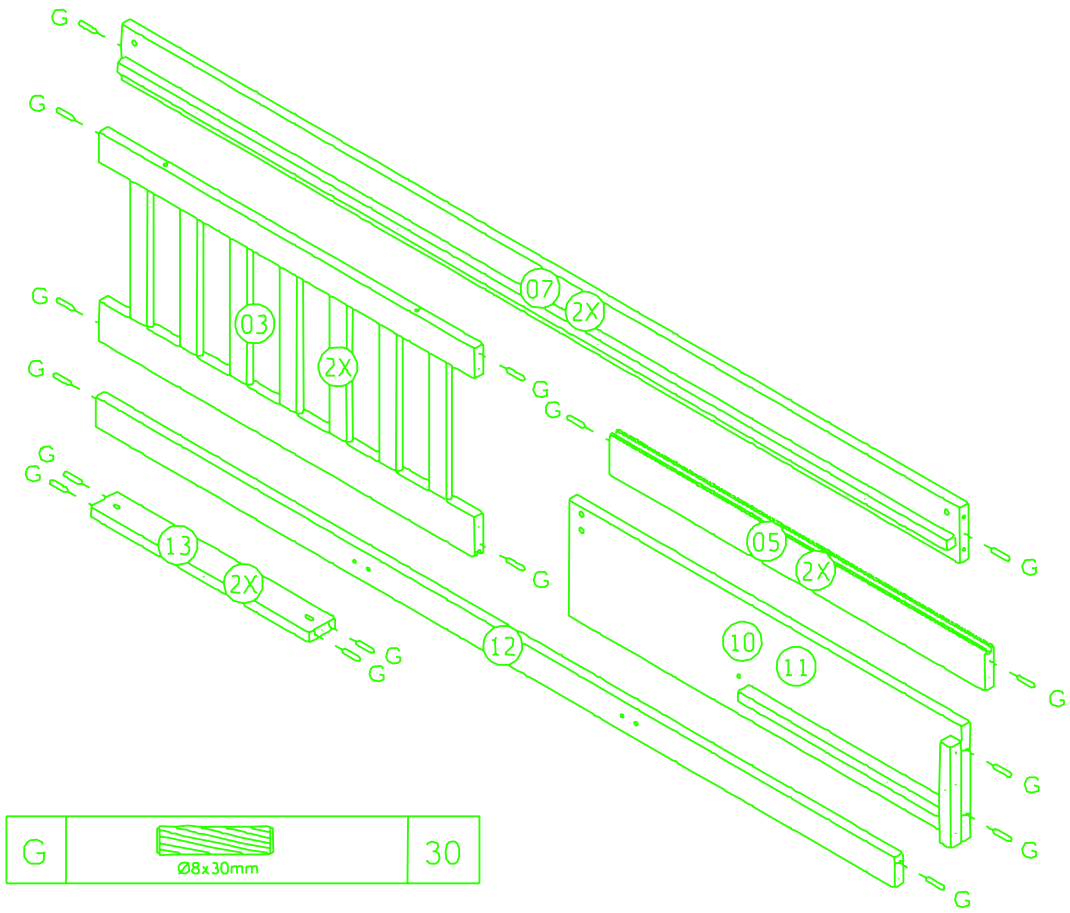

G	Ø8x30mm	30

Step 2

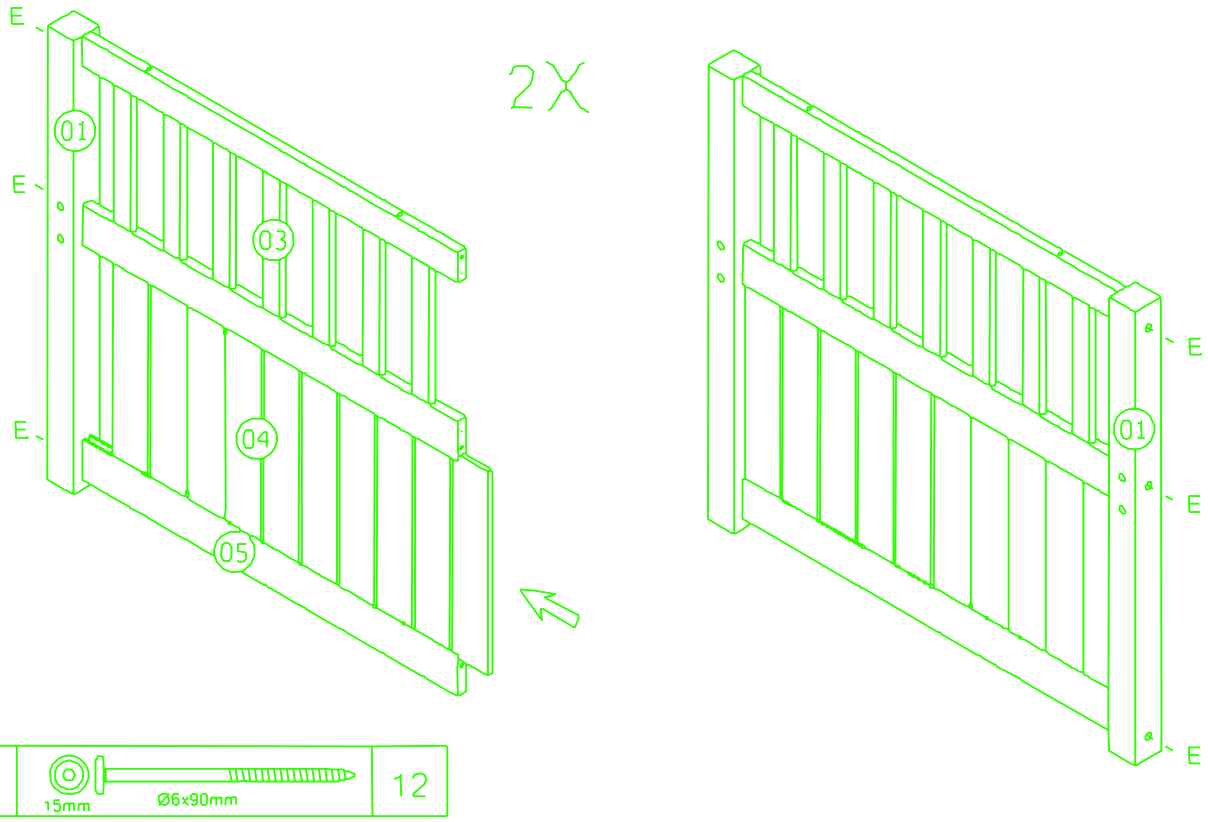

E	15mm Ø6x90mm	12

Step 3

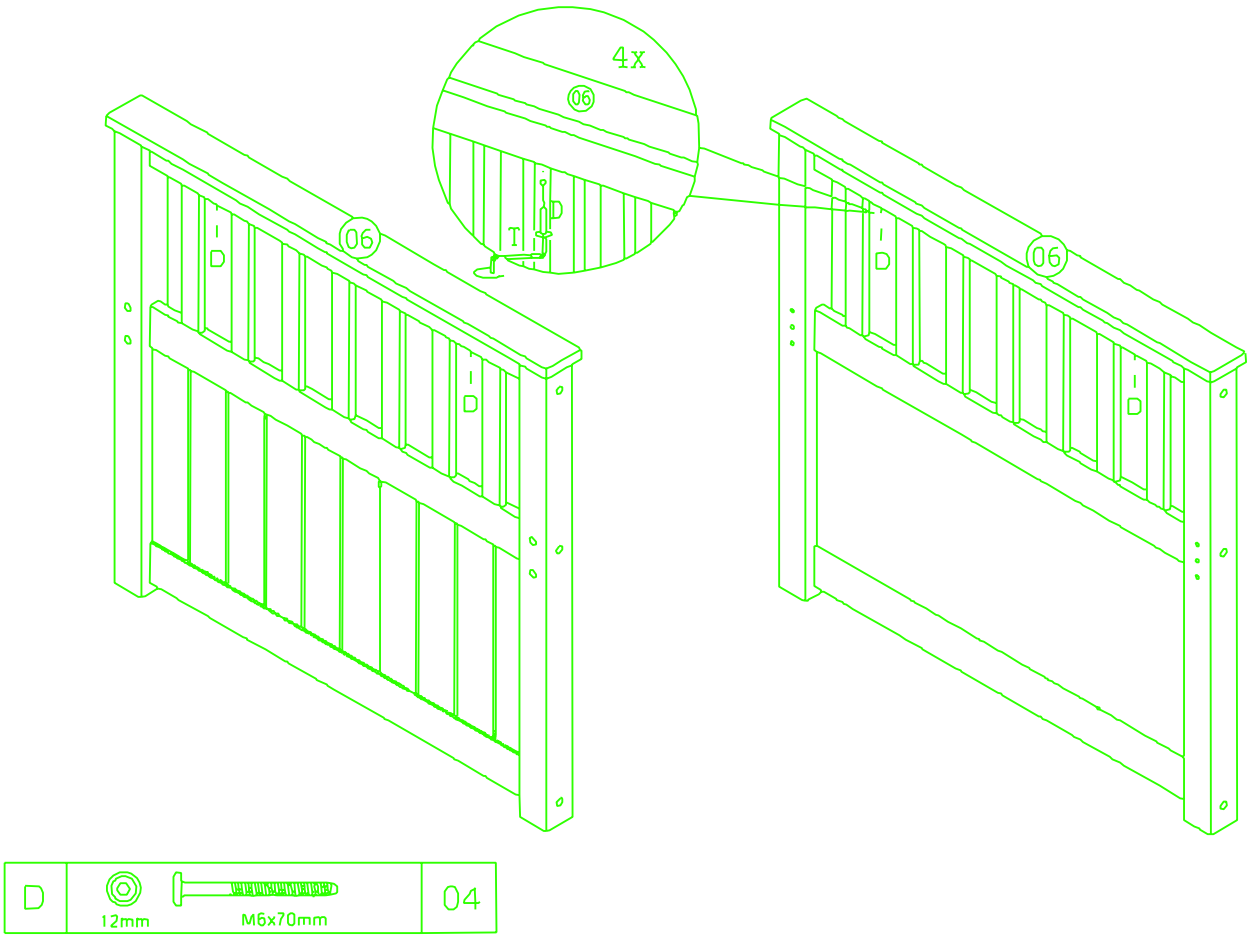

D	12mm M6x70mm	04

Step 4

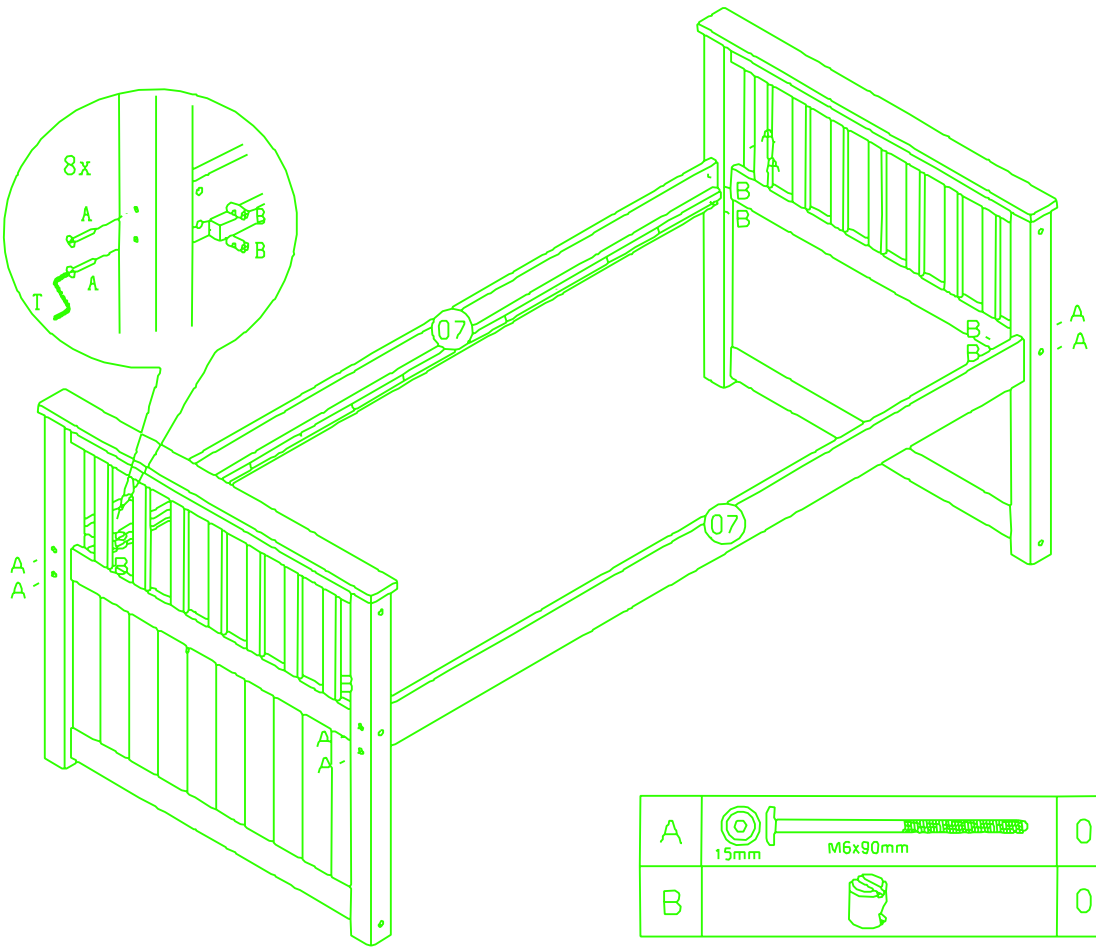

A	15mm M6x90mm	08
B		08

Step 5

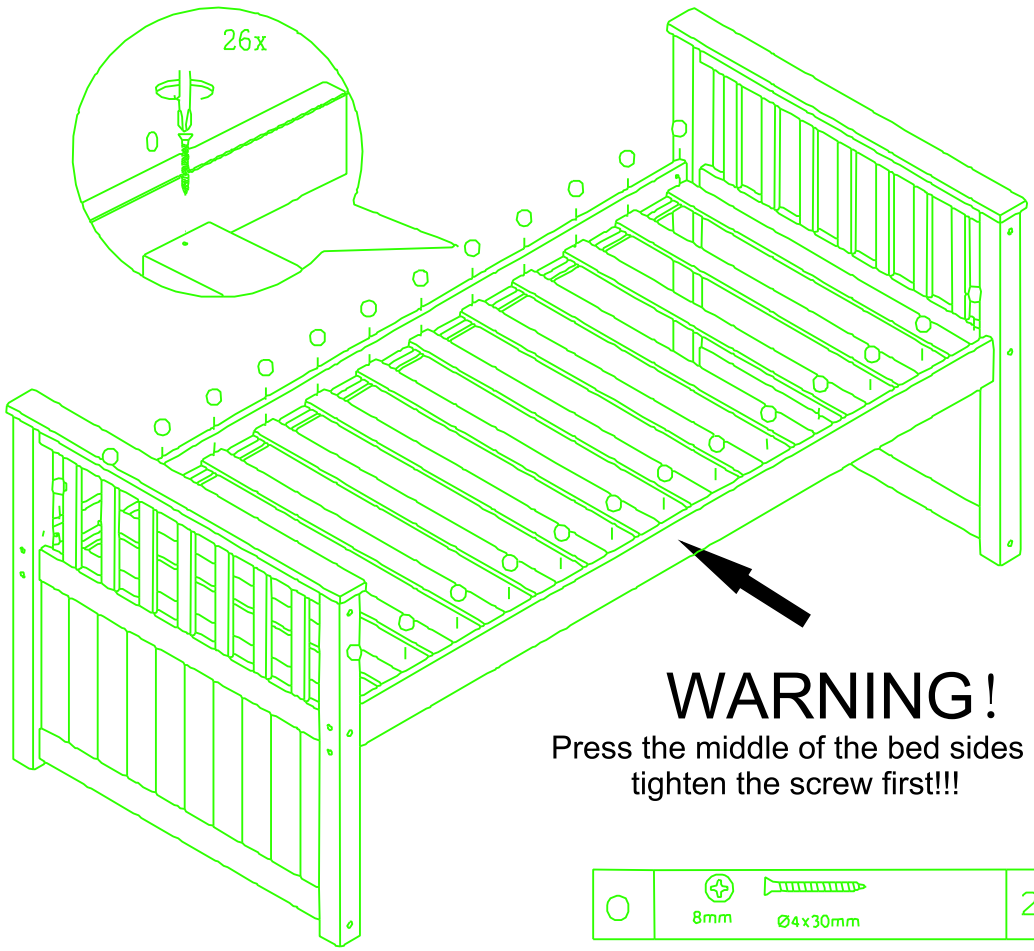

WARNING!

Press the middle of the bed sides and tighten the screw first!!!

O	8mm Ø4x30mm	26

Step 6

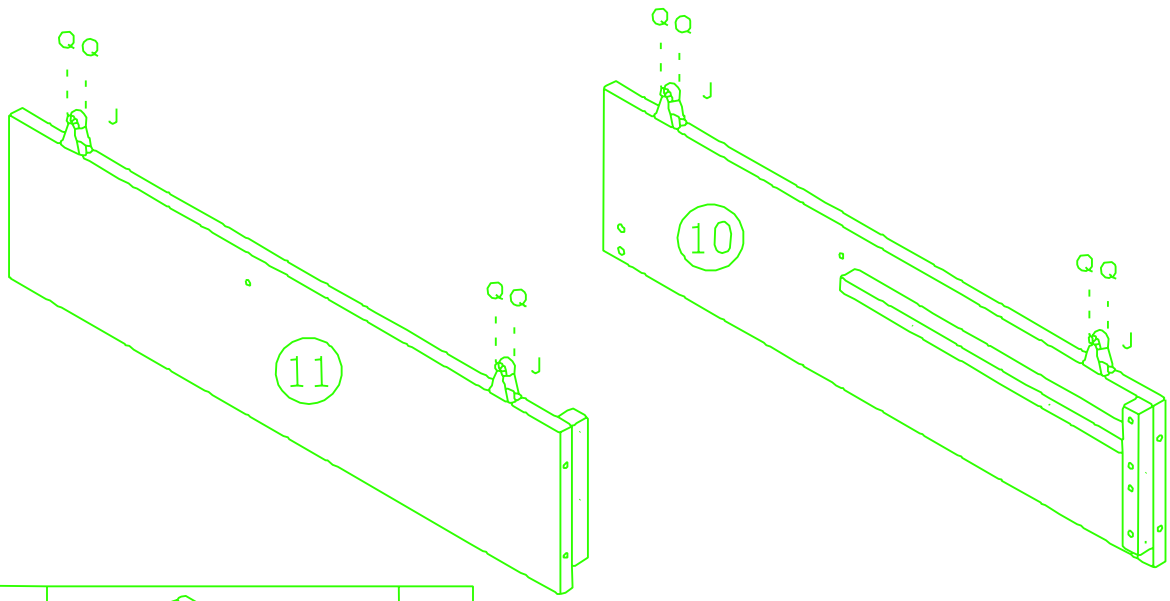

J		04
Q	7mm Ø4x16mm	08

Step 7

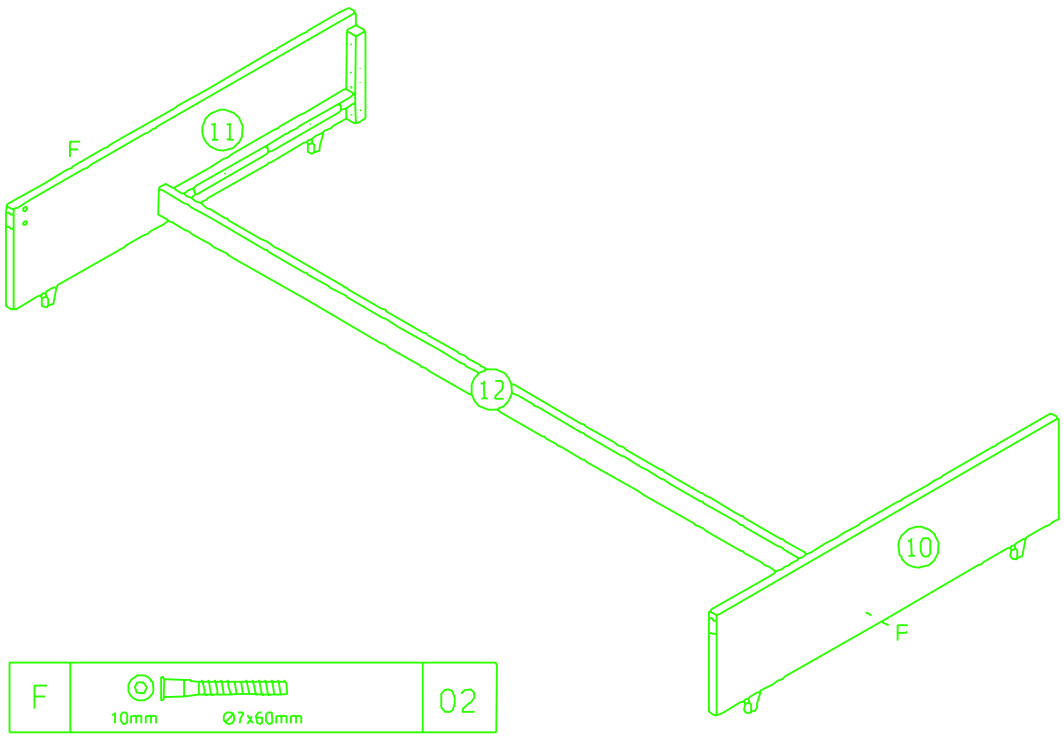

Step 8

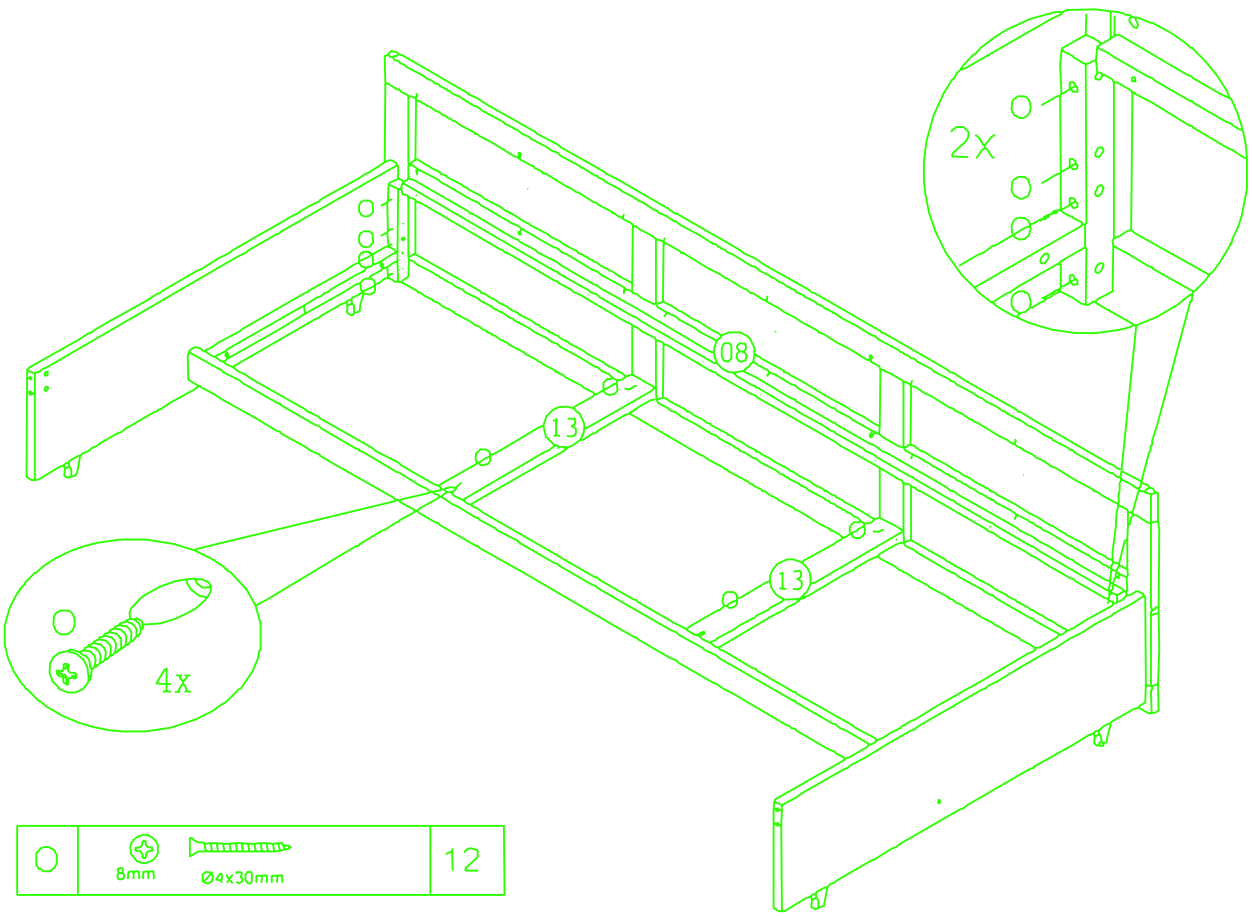

Step 9

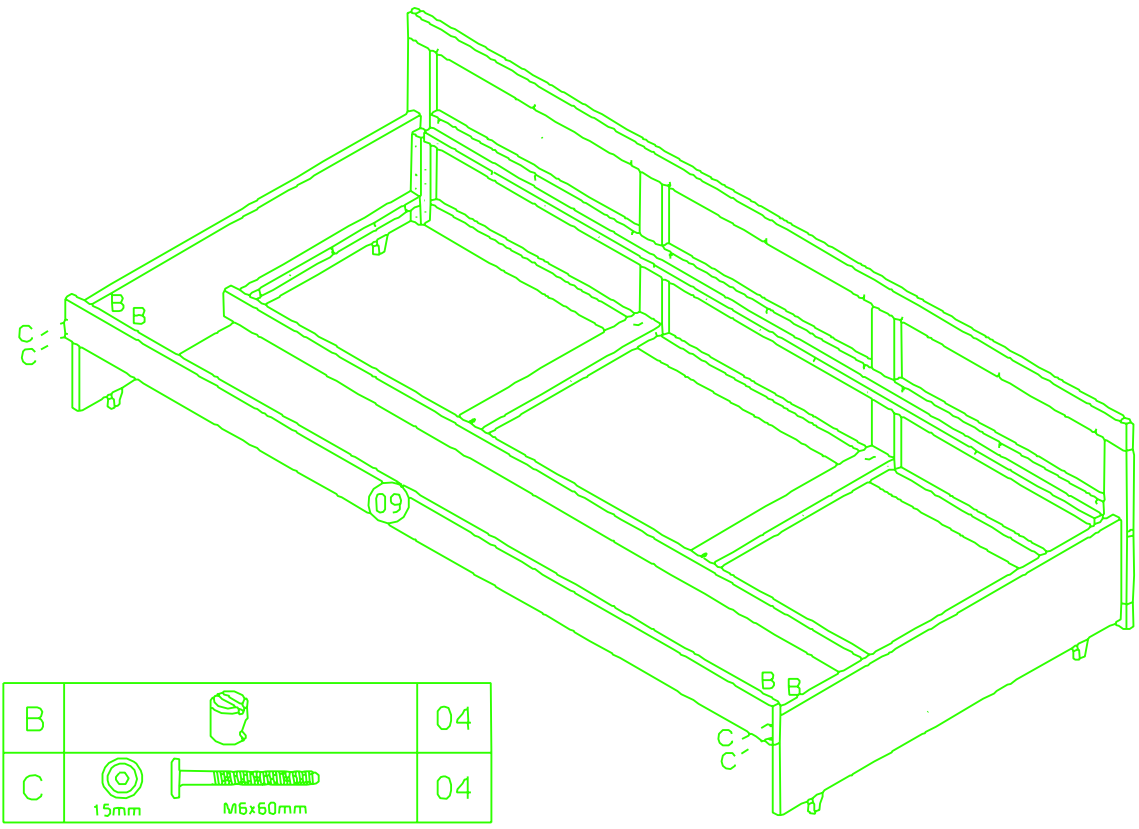

B		04
C	15mm M6x60mm	04

Step 10

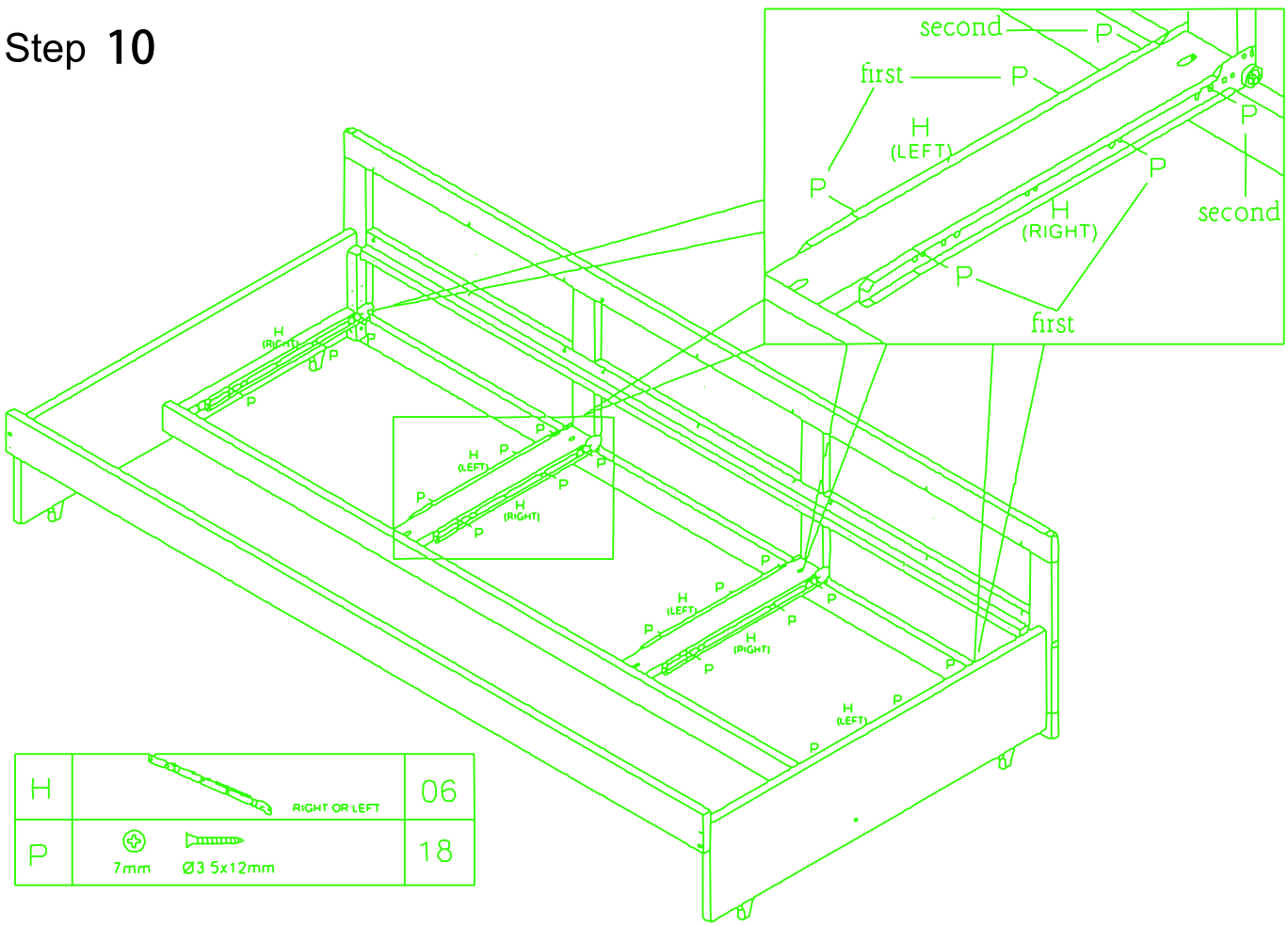

H	RIGHT OR LEFT	06
P	7mm Ø3 5x12mm	18

Step 11

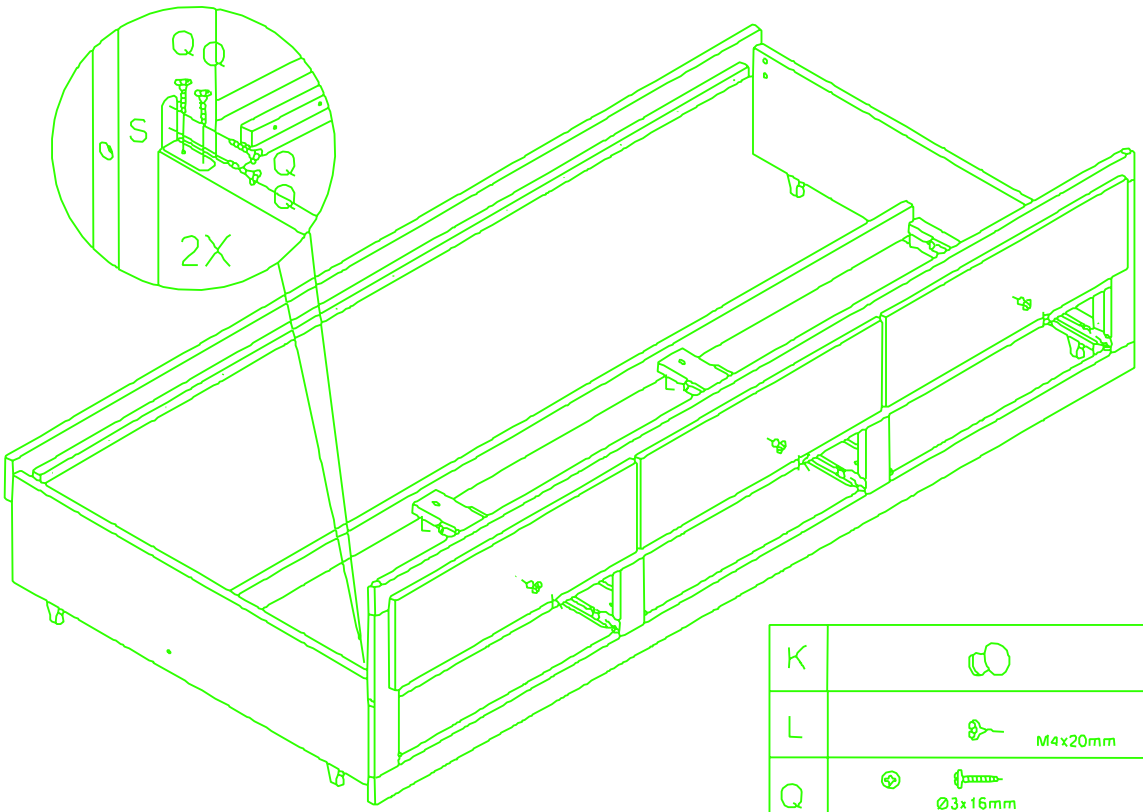

K		03
L	M4x20mm	03
Q	Ø3x16mm	08
S		02

Step 12

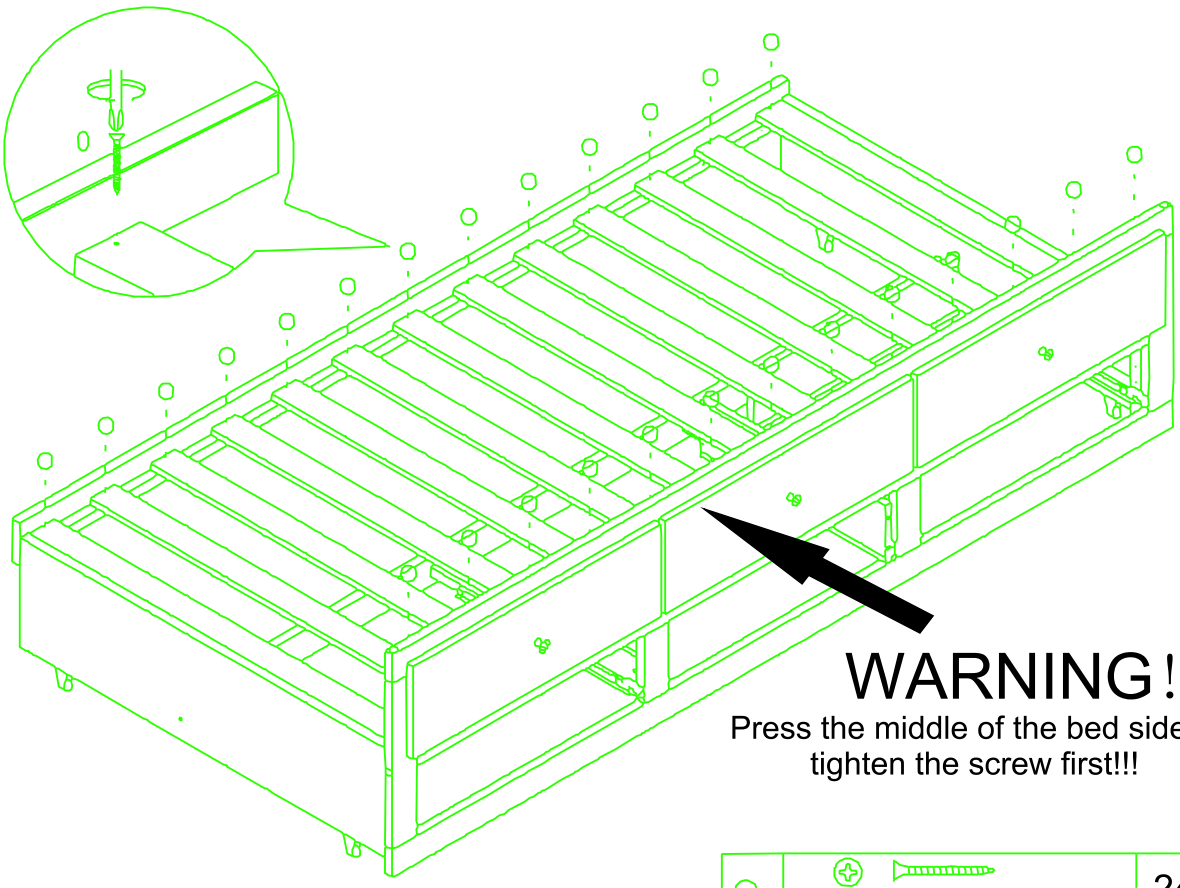

WARNING!

Press the middle of the bed sides and tighten the screw first!!!

	8mm Ø4x30mm	24

Step 13

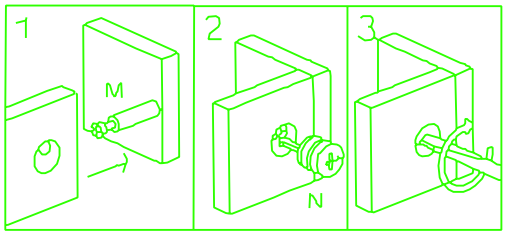

M		12
N		12

Step 14

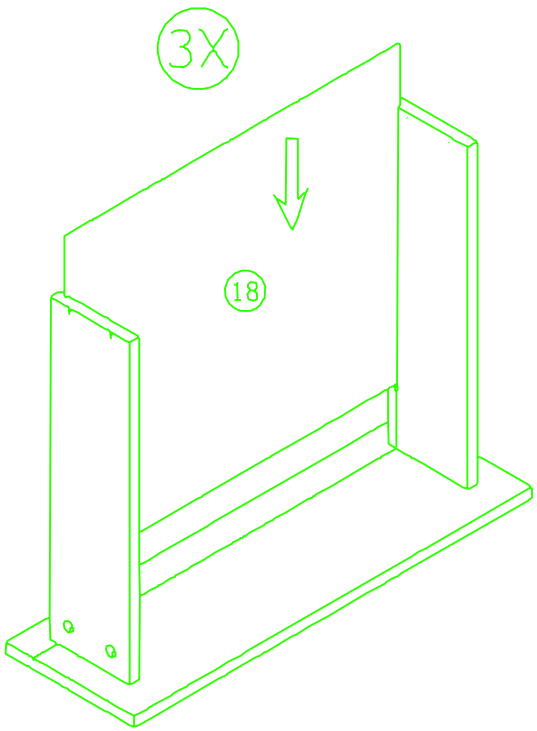

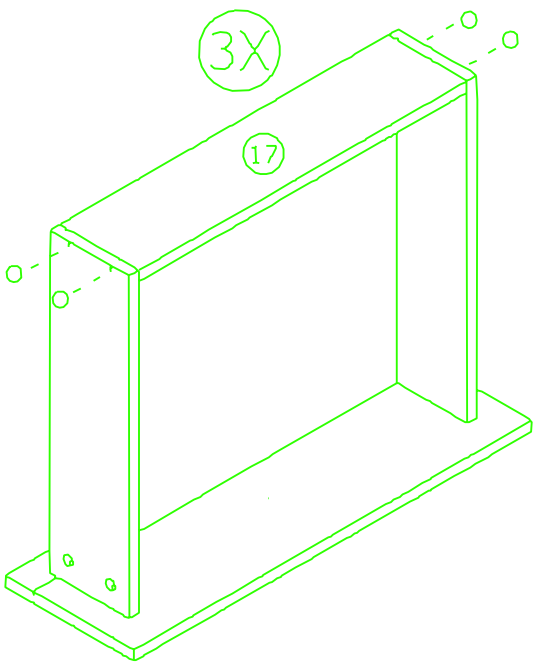

O	8mm Ø4x30mm	12

Step 15

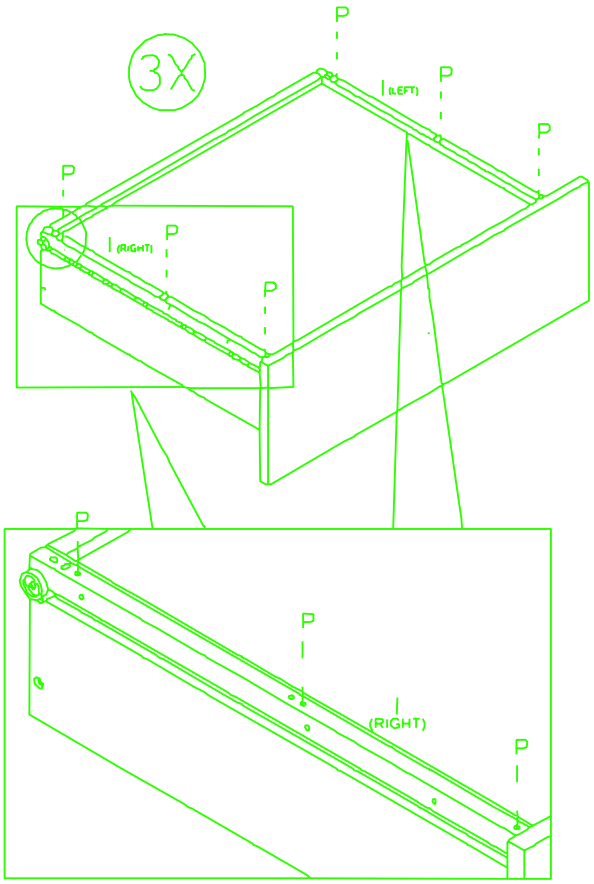

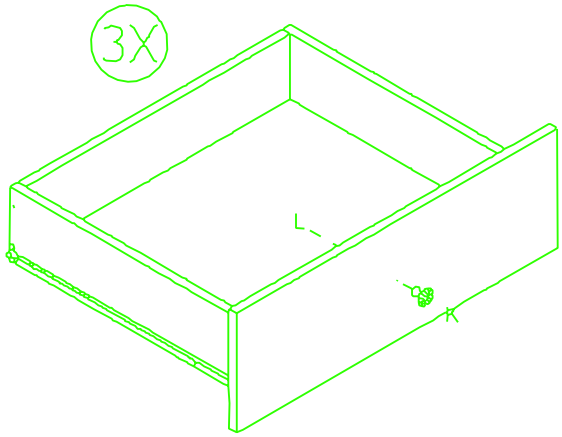

I	RIGHT OR LEFT	06
K		03
L	M4x20mm	03
P	7mm Ø3 5x12mm	18

Step 16

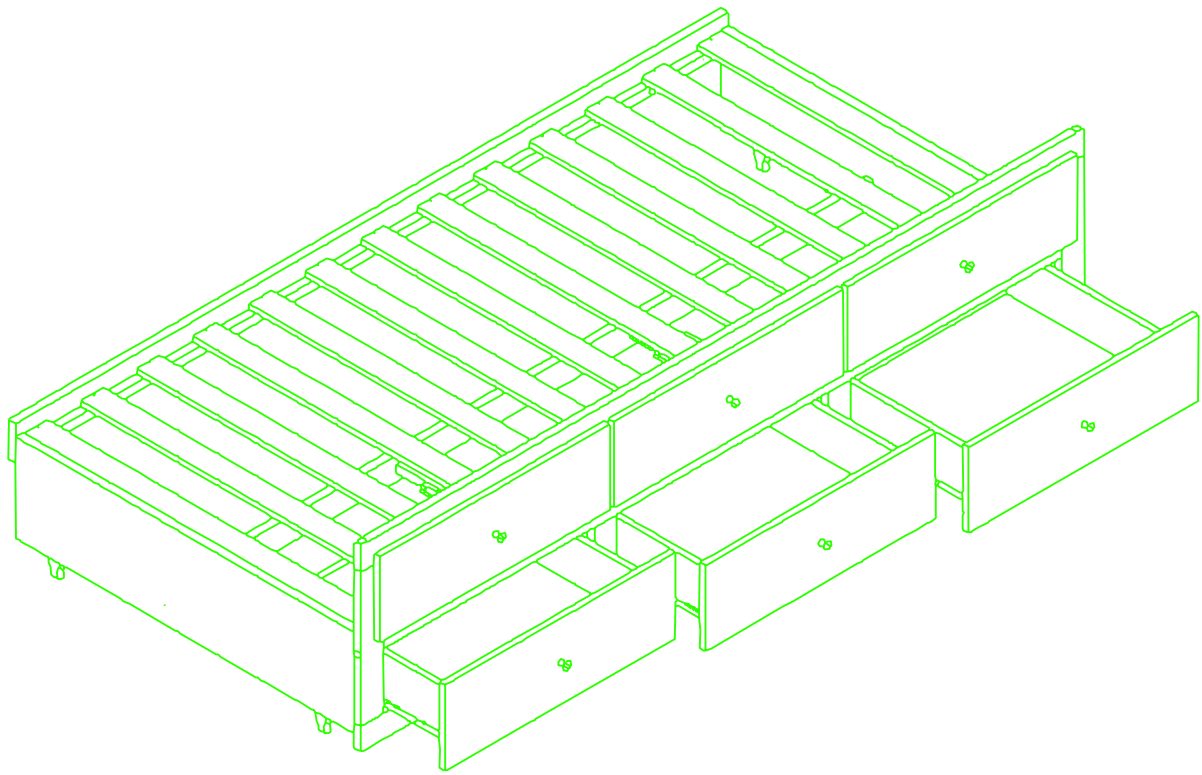

Step 17

