BED FRAME

ASSEMBLY INSTRUCTIONS

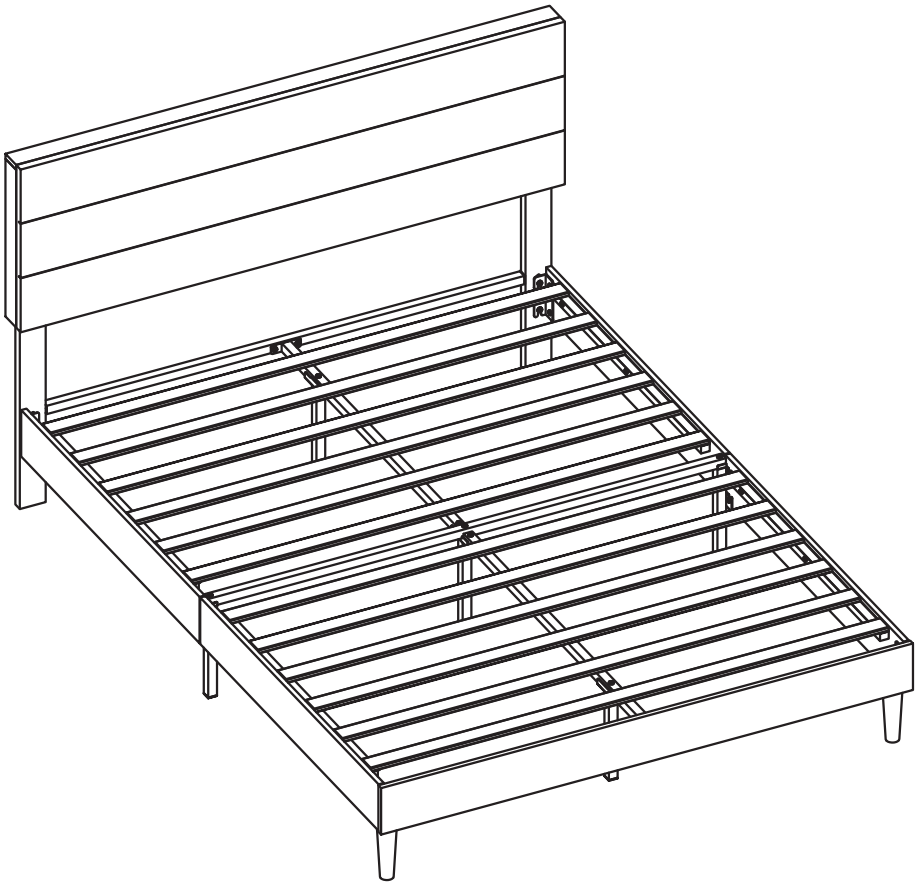

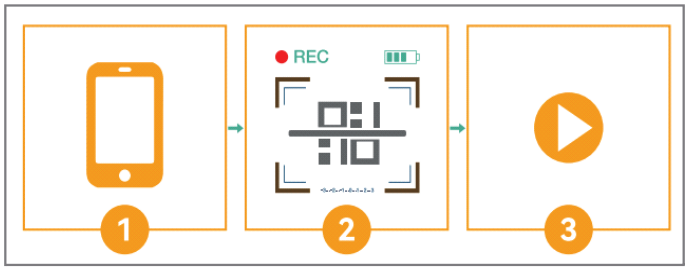

CAUTION:

- Please do not open the compress packaging until your sofa frame is completely assembled.
- Compress cushions or pillows need to fully fluffed within 72 hours for your perfect use.
- Please keep children away from plastic bag or any small pieces of stuff.
- After assembly is completed, don't forget to pat the back cushions and seat cushions, make them recovering better. And wait 72 hours for fully rebound.
- Cushions should be regularly maintained for perfect use.
- 2 people to install is recommend.
- 2 people to lift the sofa if you want to move it, do not push or pull directly
- You can assemble it with out packaging tools or home electric drill, as shown below, Electric Drill tool is not included.

Electric drill will improve your assembling efficiency.
You can use it if you have this tool, DO NOT overtight to prevent from damaging screws and slats/boards.

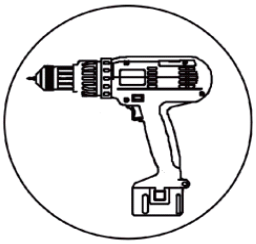

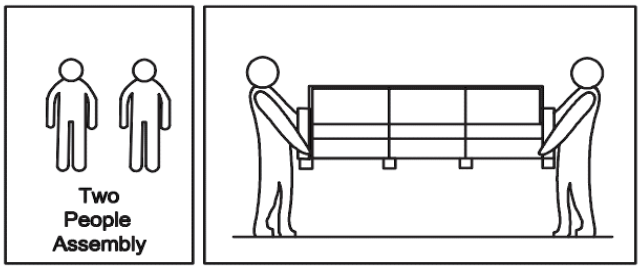

Components:

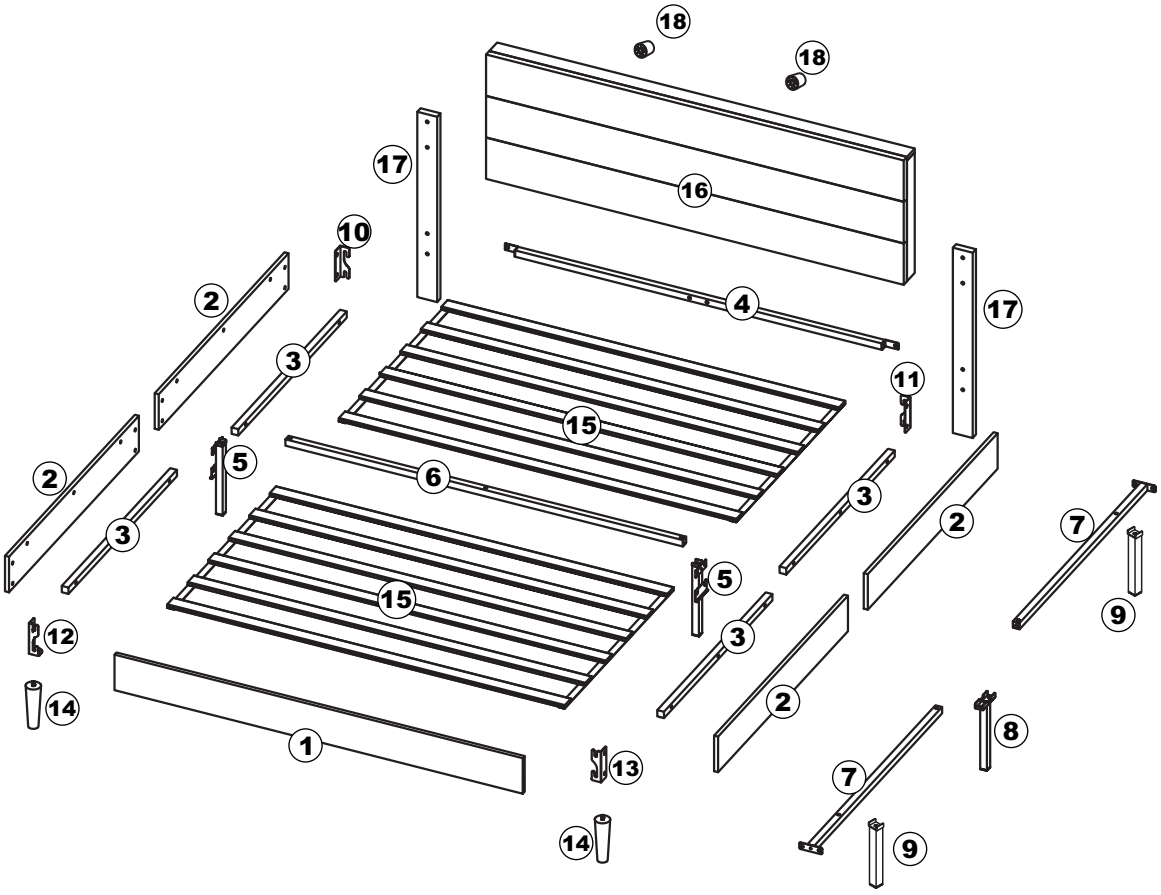

NOTE:Please do not completely tighten all the hardware until the entire assembly is complete!

ASSEMBLY TOOLS REQUIRED

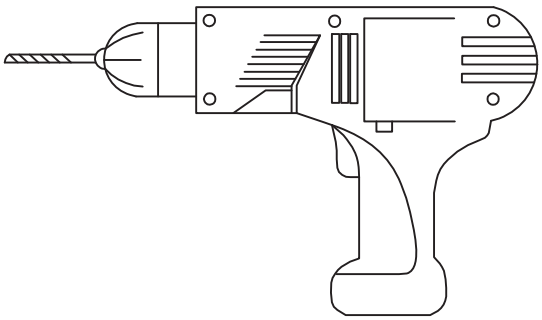

Electric Drill
（Not provide)

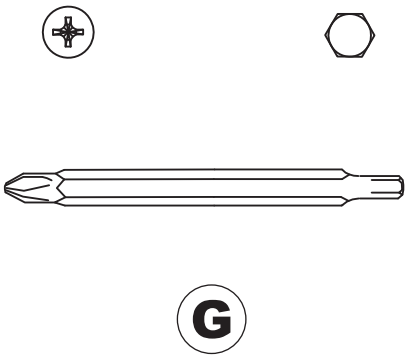

Bit
（Include in hardware bag)

Electric Drill tool is not included.
Electric drill will improve your assembling efficiency.
You can use it if you have this tool,
DO NOT over drill to provent from damaging screws and boards.

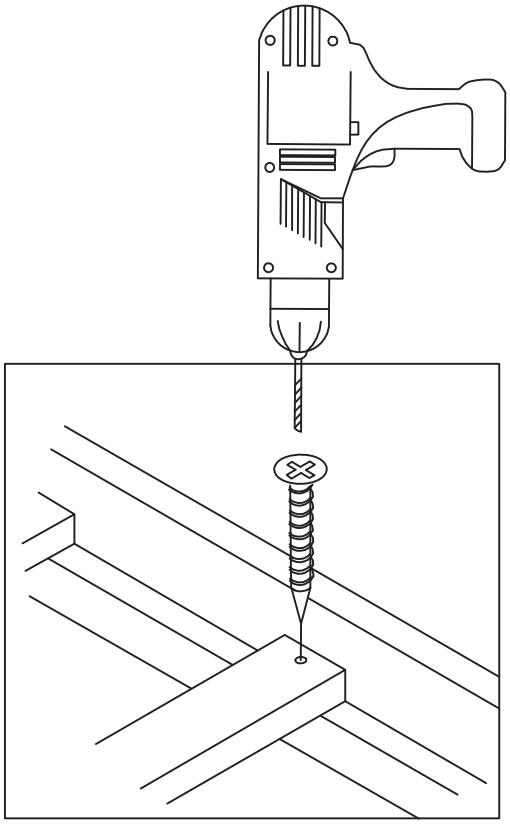

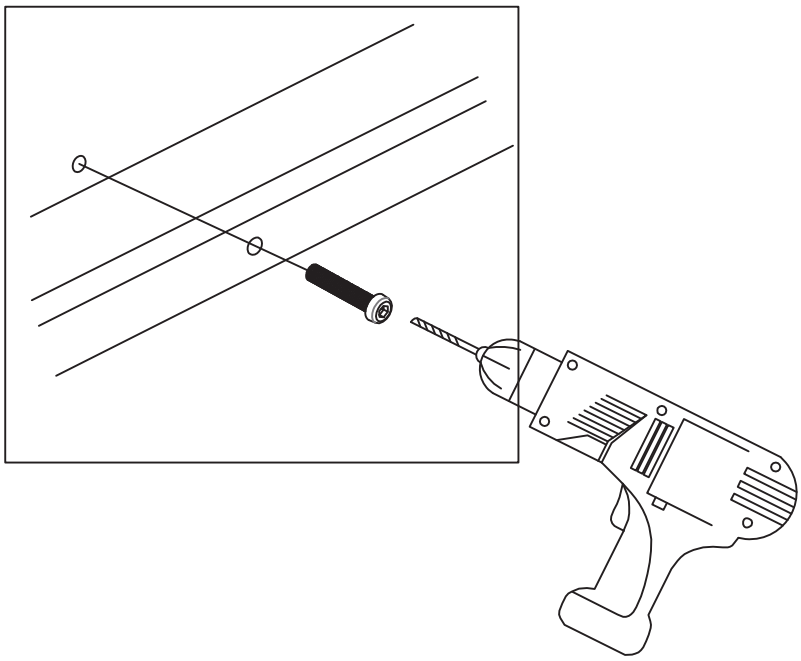

HARDWARE

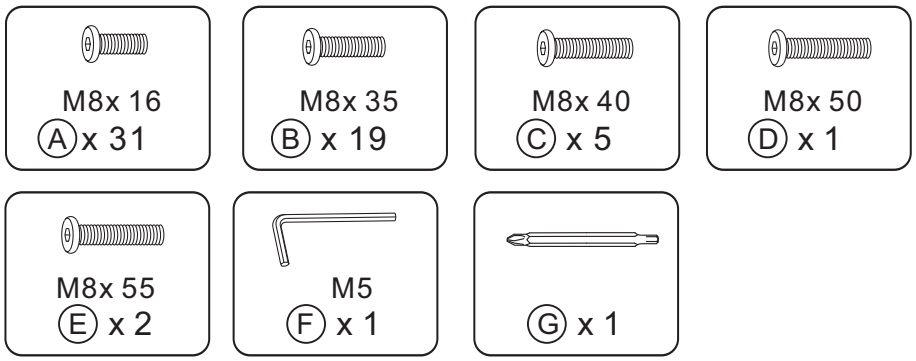

Step 1

Ⓐ x4
M8X16

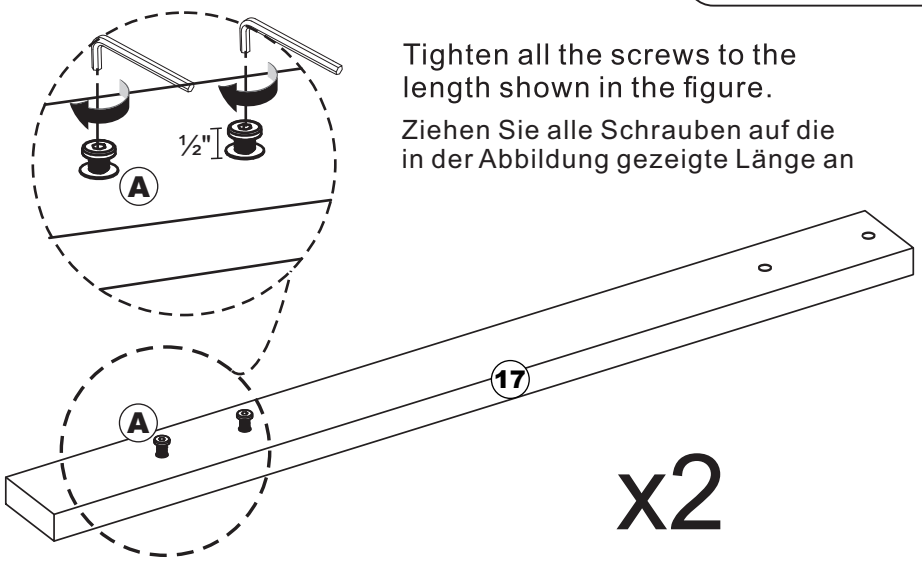

Tighten all the screws to the length shown in the figure.

Ziehen Sie alle Schrauben auf die in der Abbildung gezeigte Länge an

Step 2

Ⓔ x2
M8X55

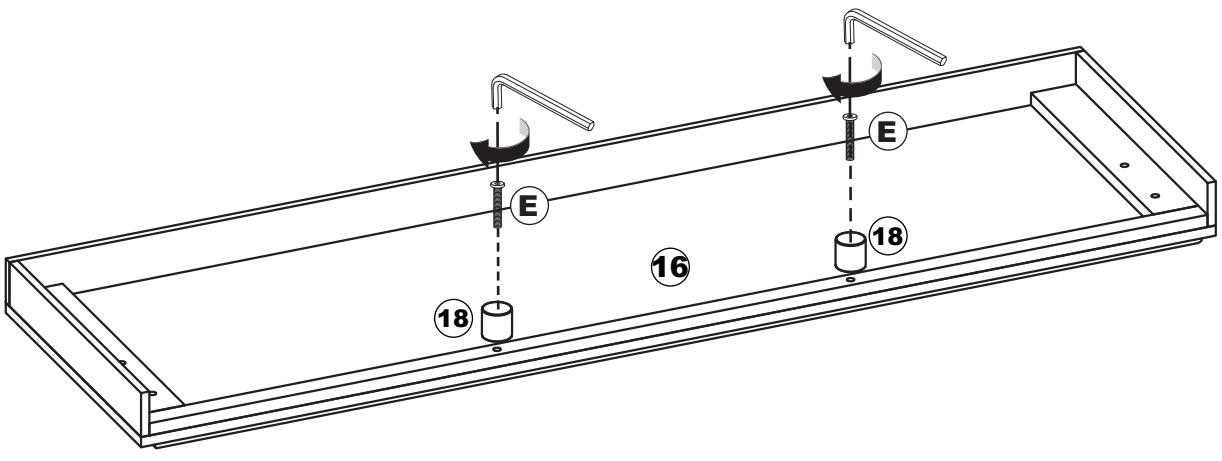

Step 3

C x4
M8X40

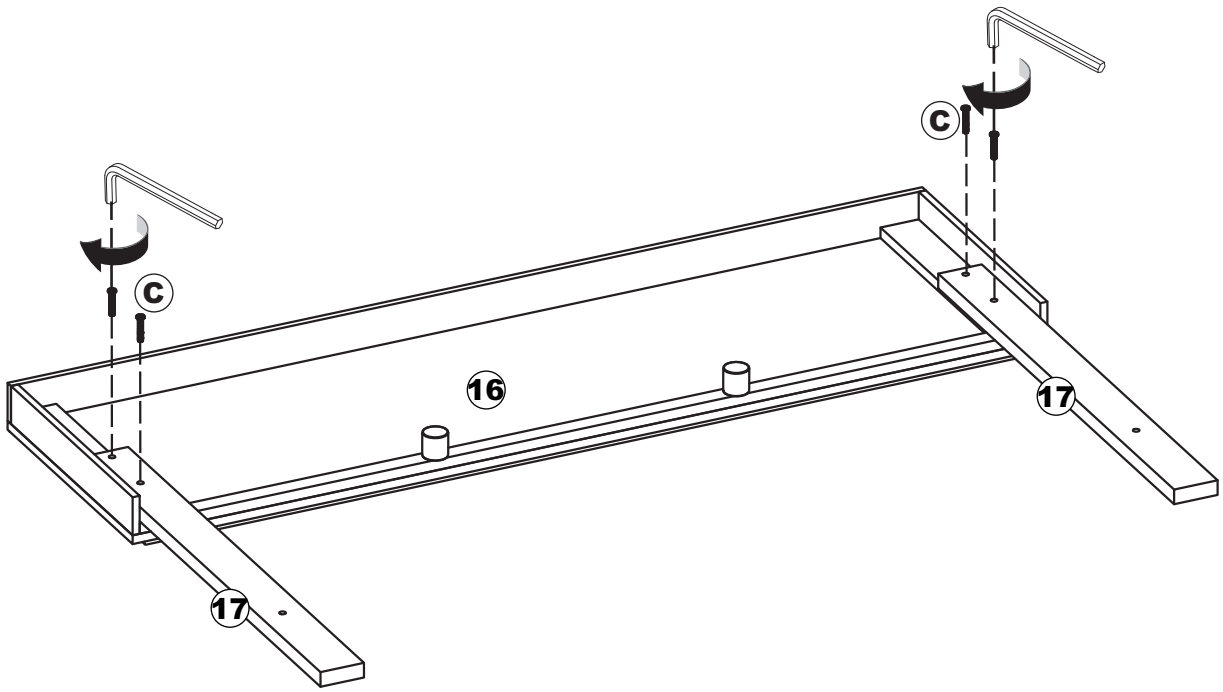

Step 4

A x2
M8X16

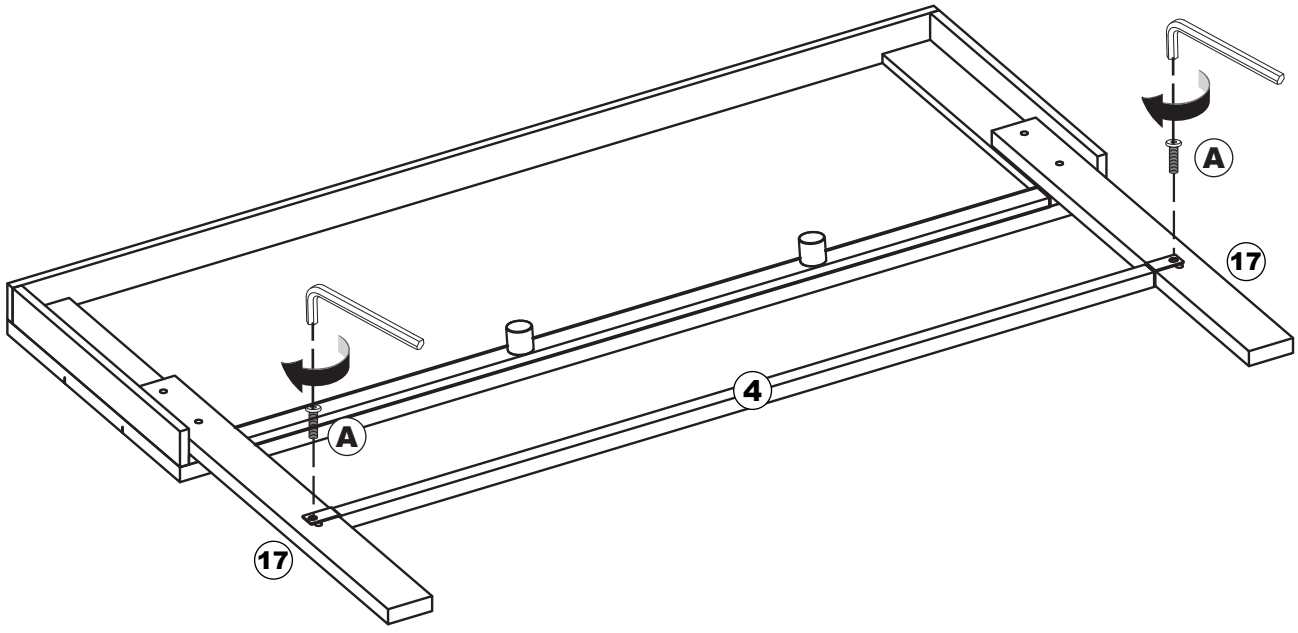

Step5

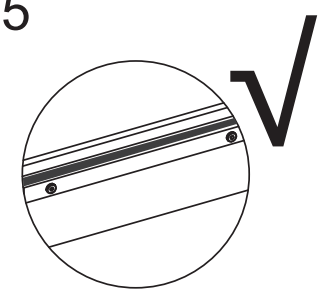

The side of the Velcro facing upwards is correct

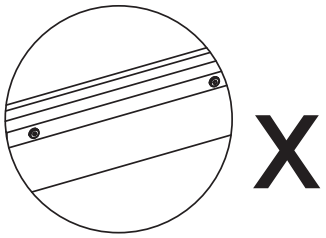

The side of the Velcro facing downwards is incorrect

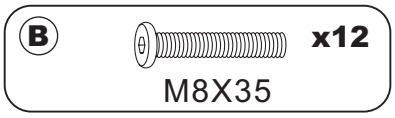

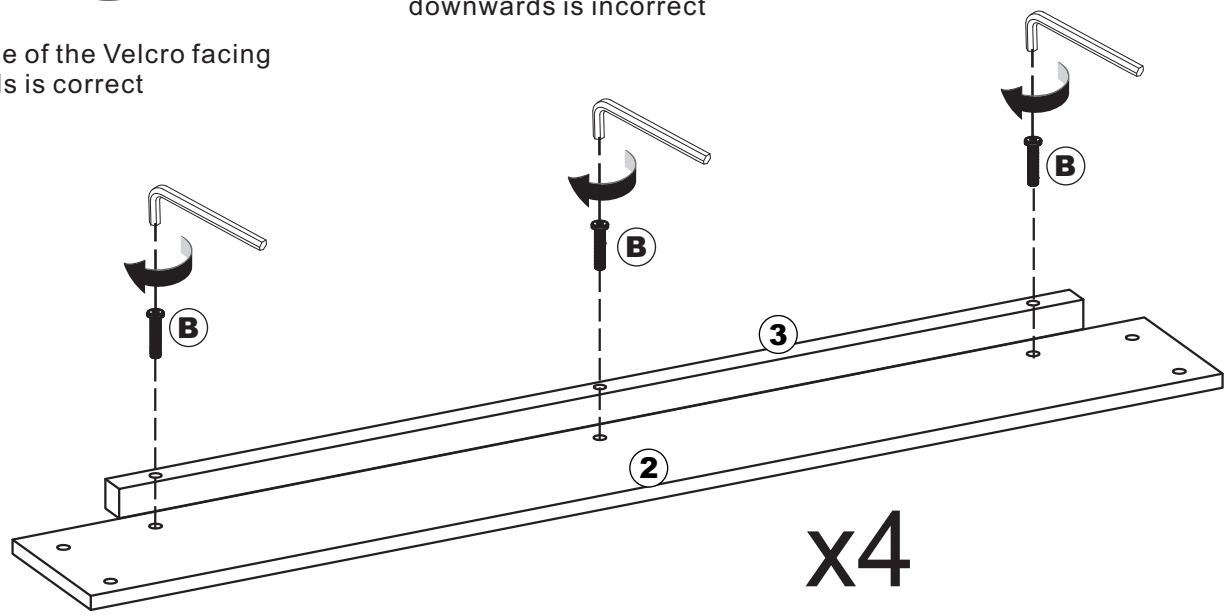

Step 6

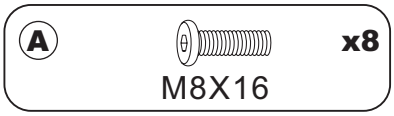

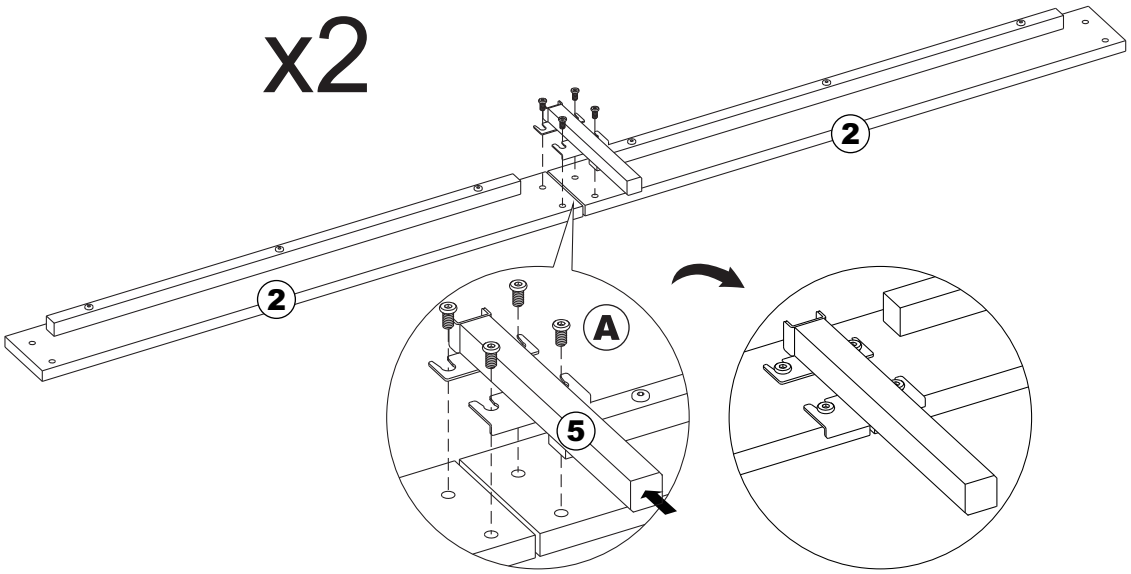

⚠ Please push the bottom of part (5) when you install it.

Step 7

A x8
M8X16

Please pay attention to the assembly direction.

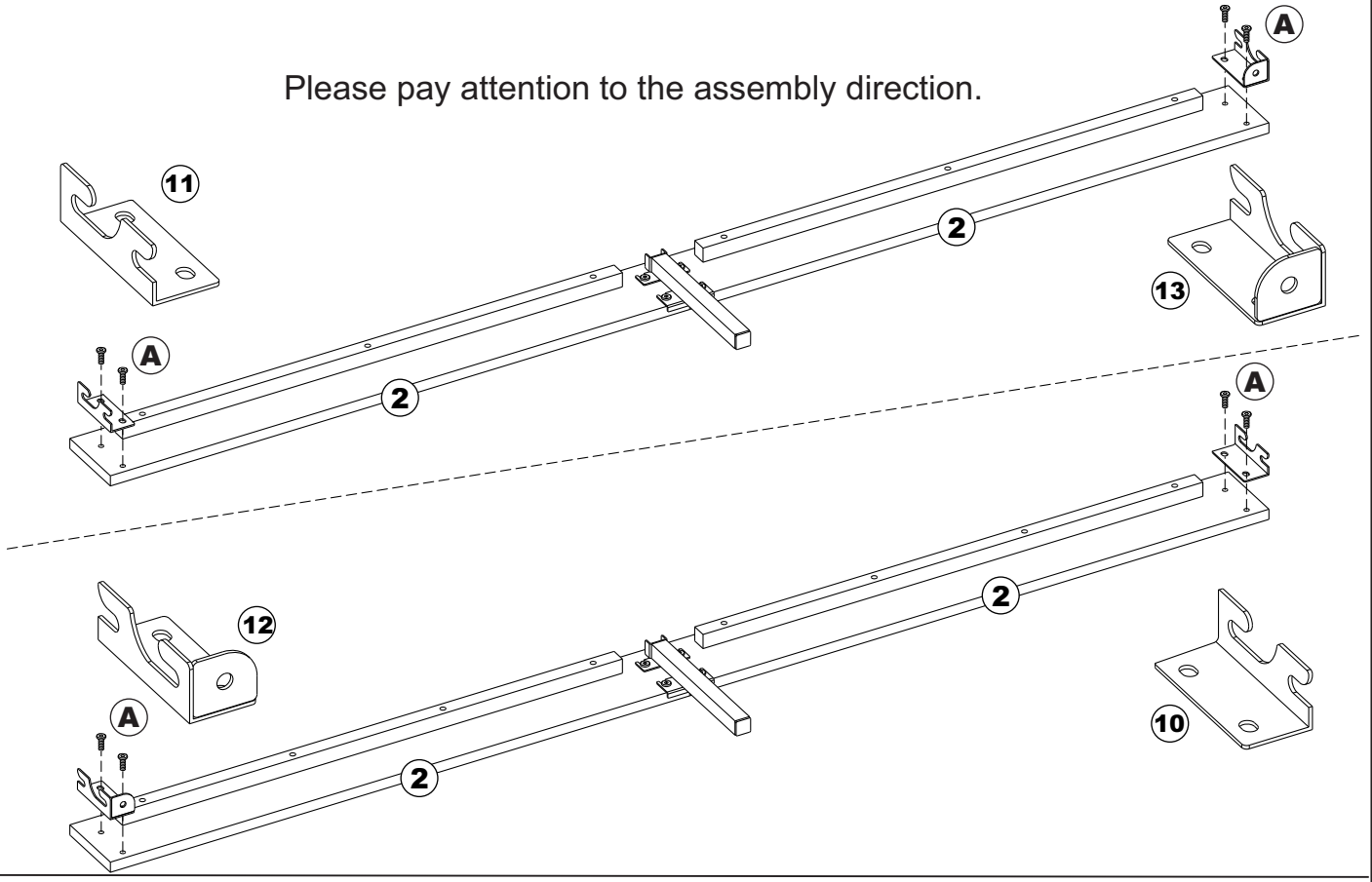

Step 8

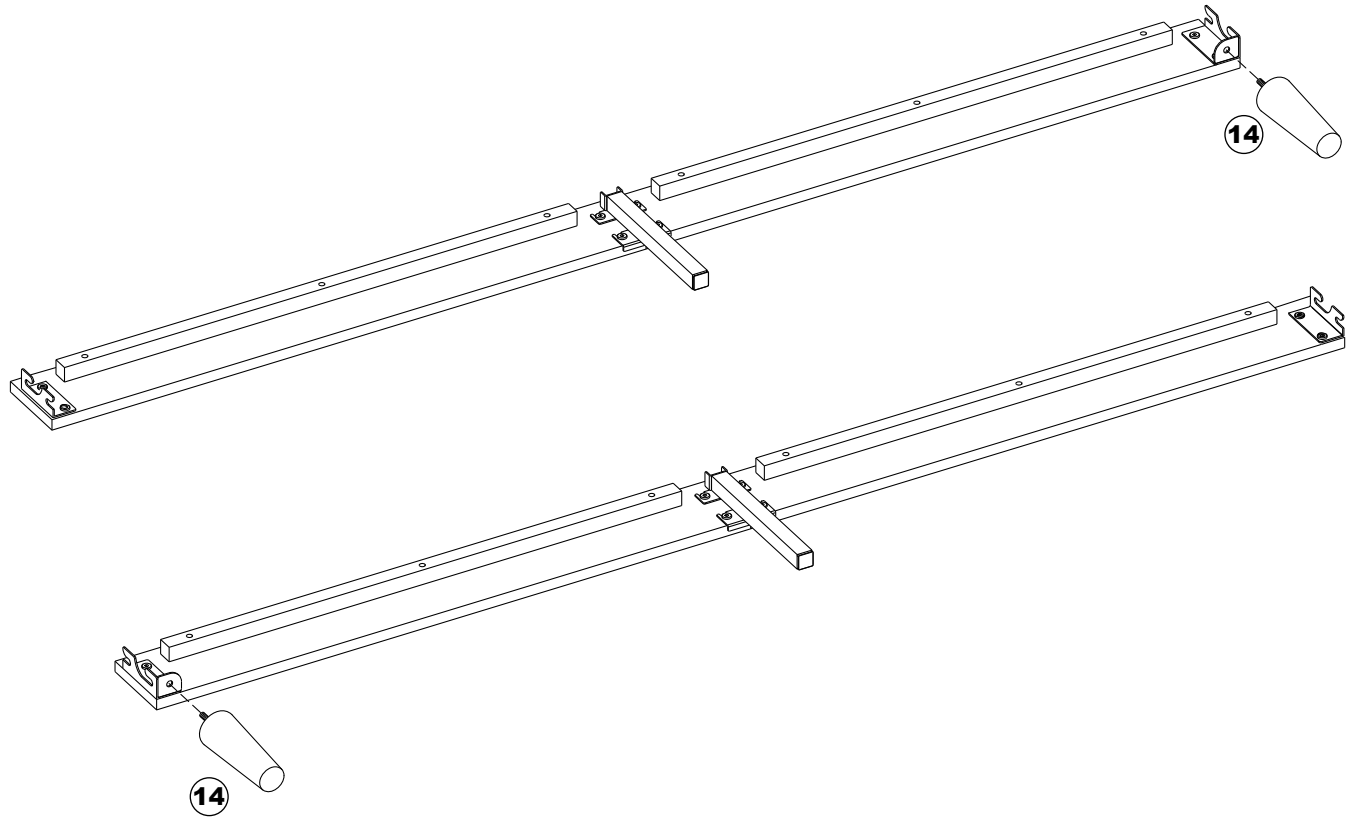

Ziehen Sie die Schrauben an.

Step 9

A x4
M8X16

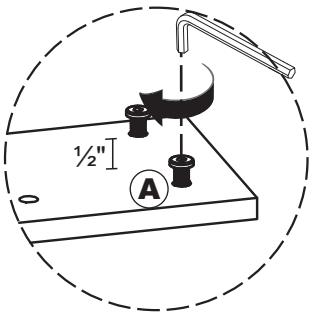

Tighten all the screws to the length shown in the figure.

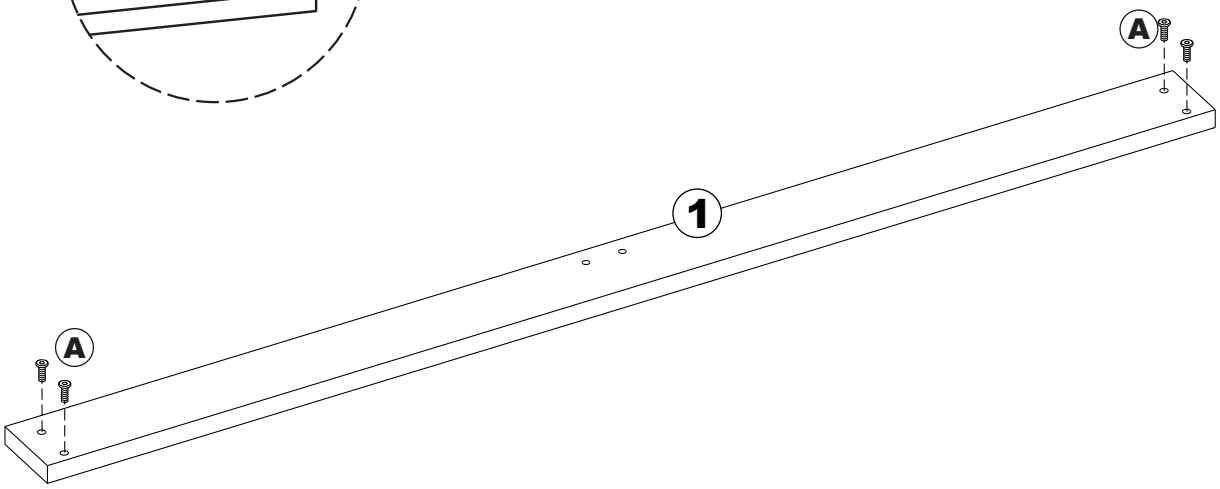

Step 10

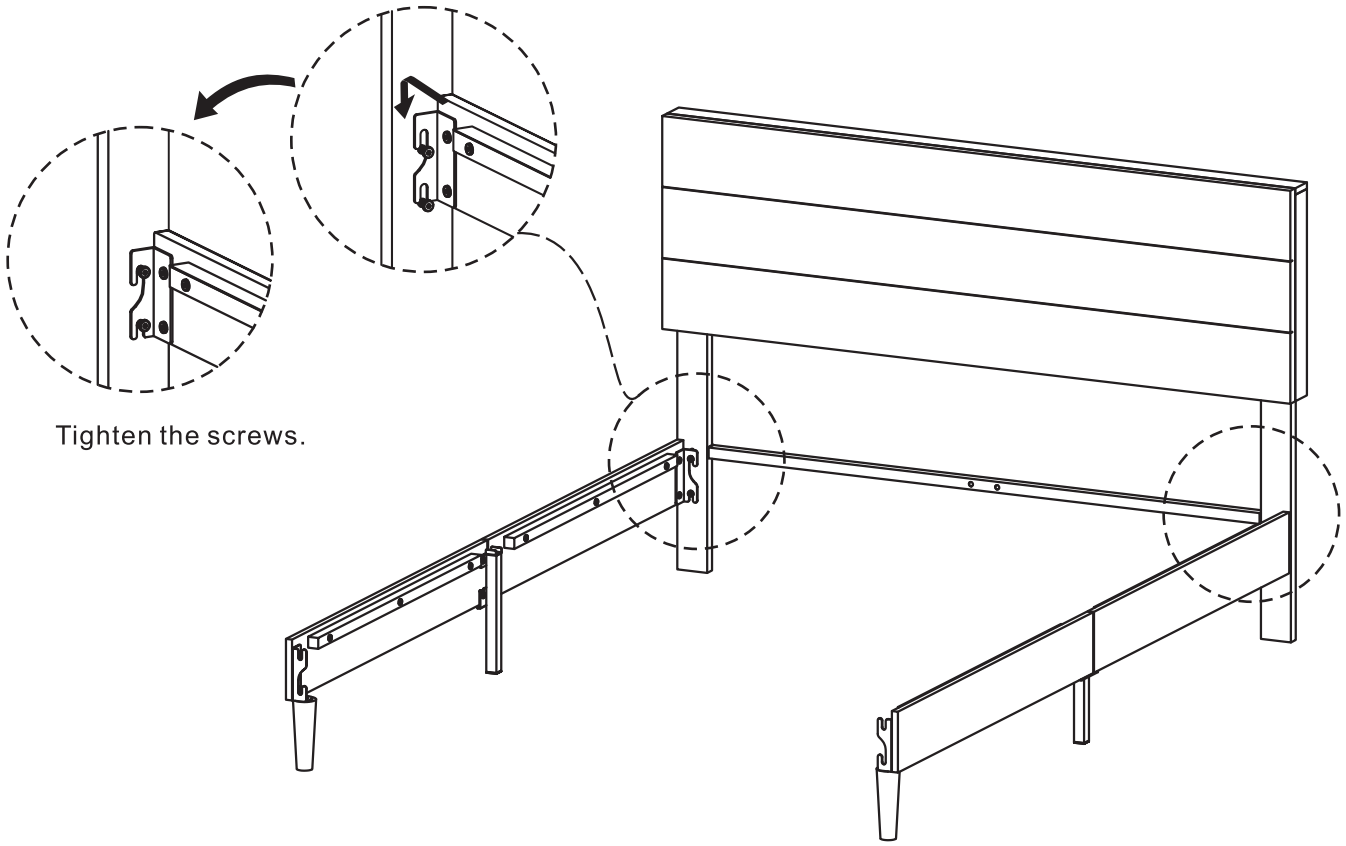

Tighten the screws.

Step 11

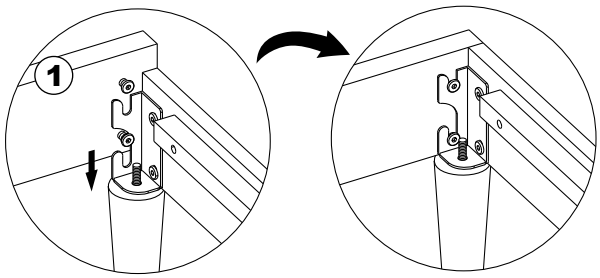

Tighten the screws.

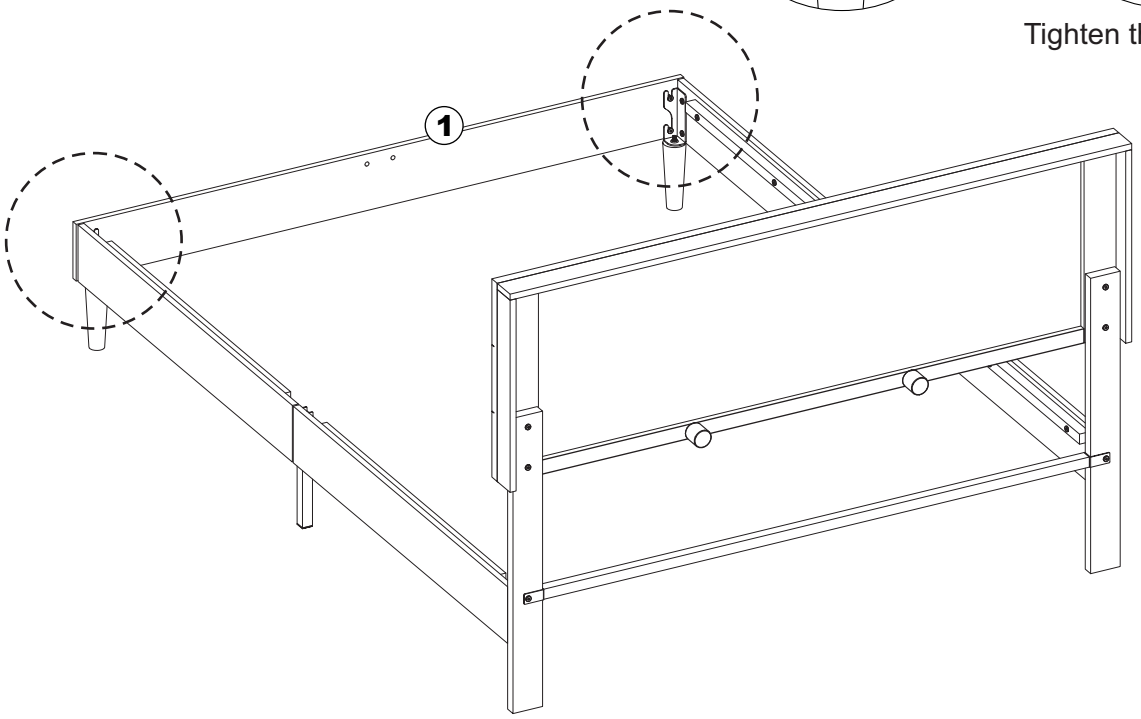

Step 12

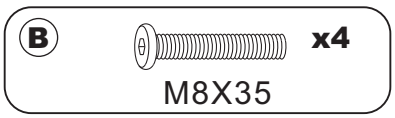

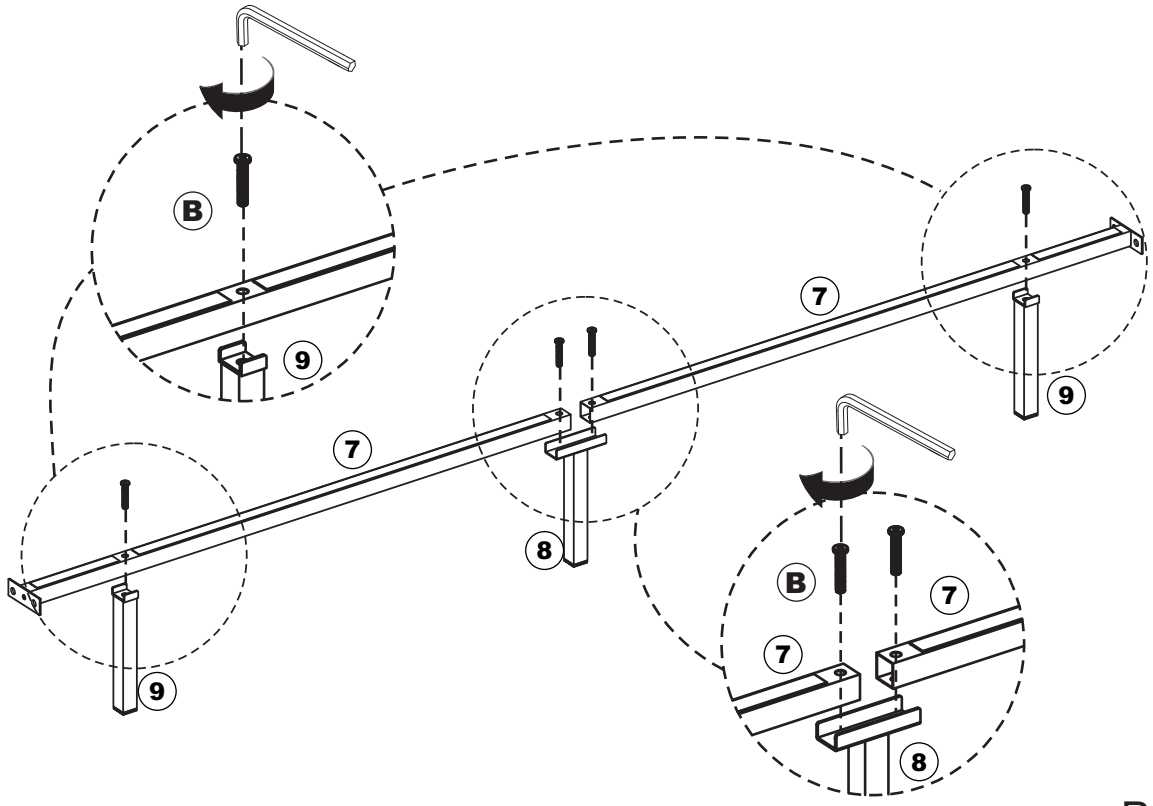

Step 13

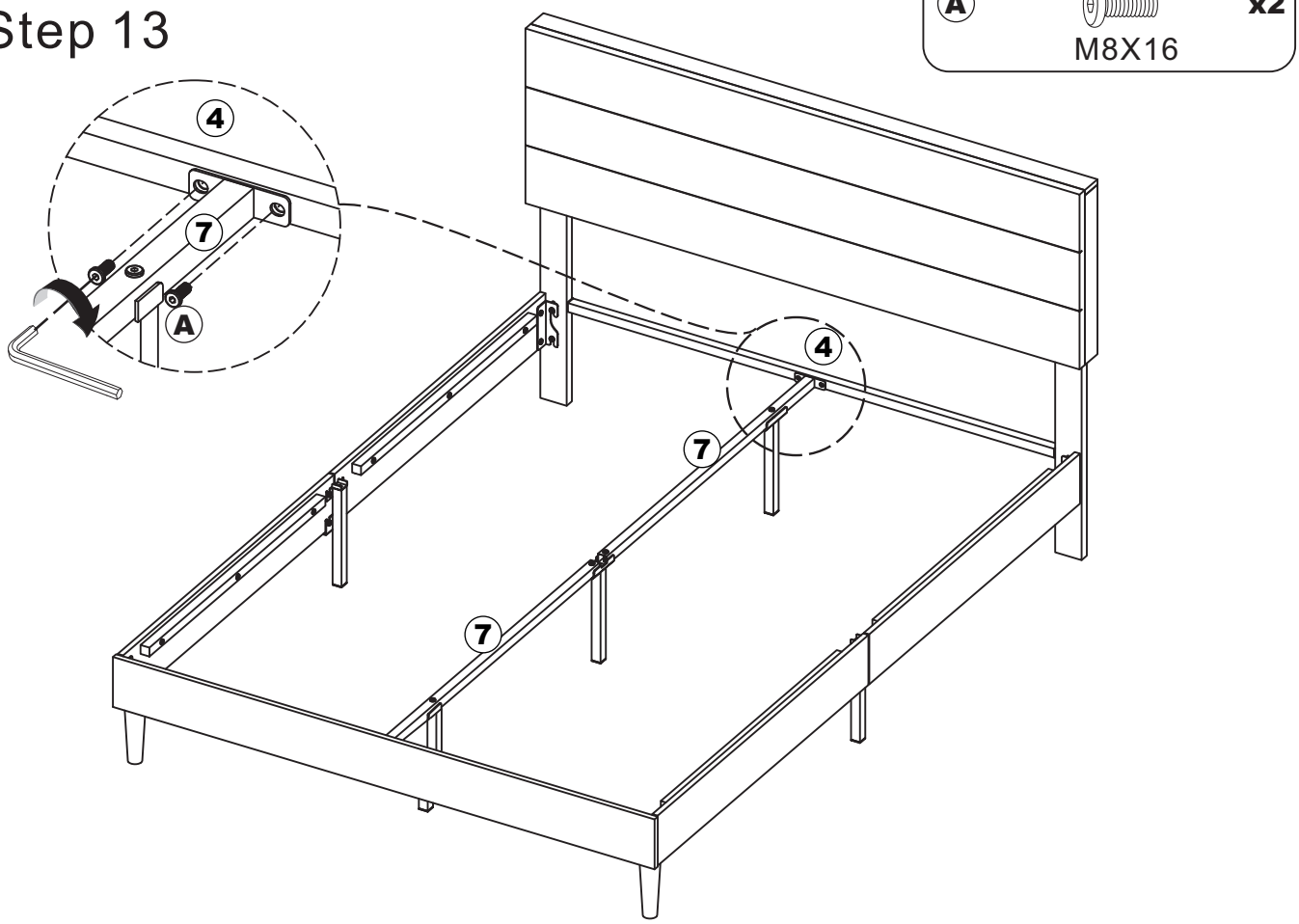

Step 14

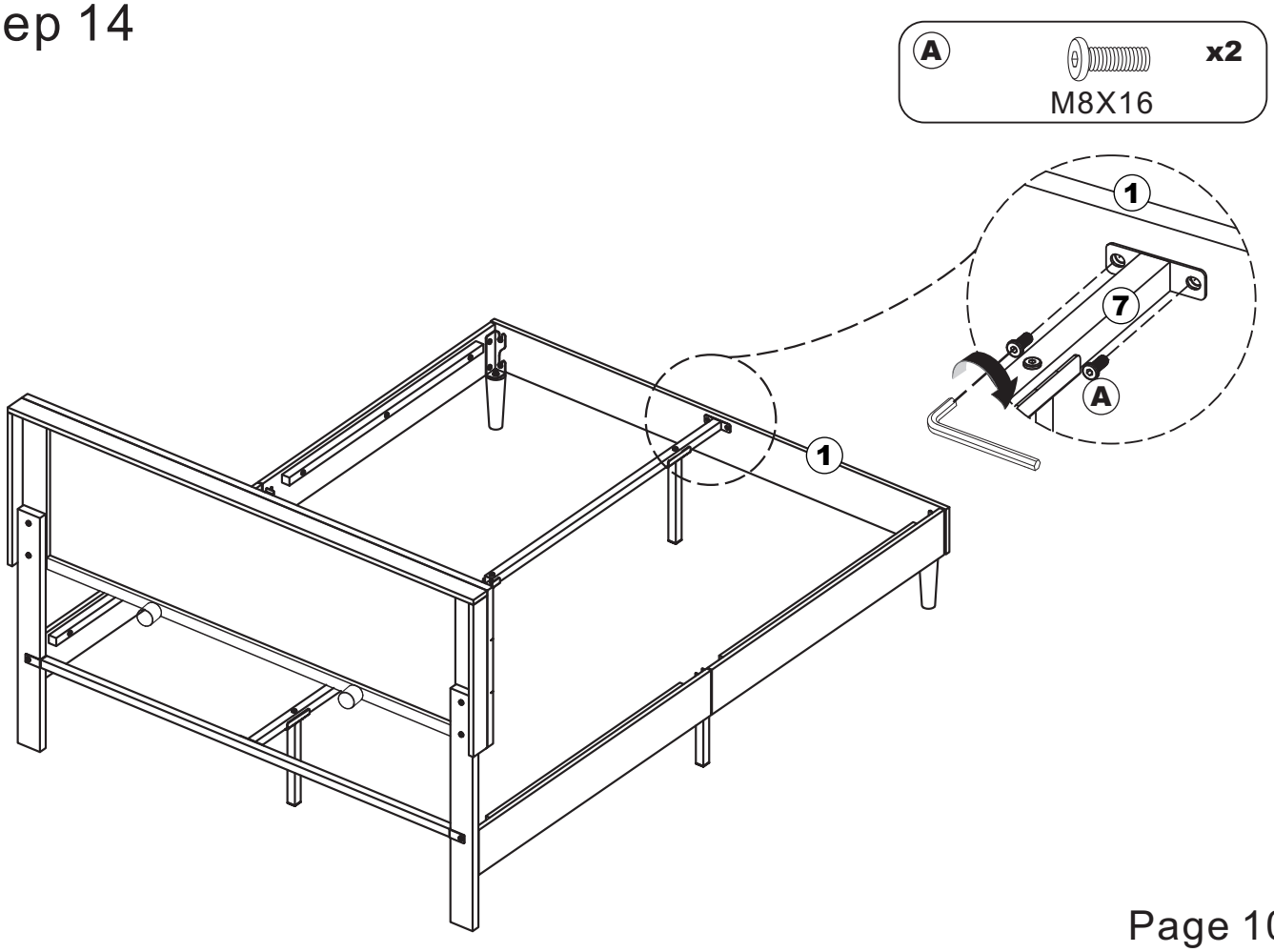

Step 15

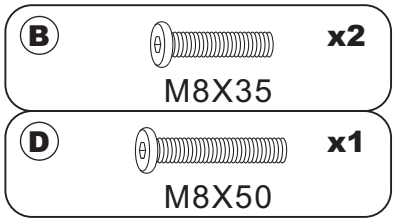

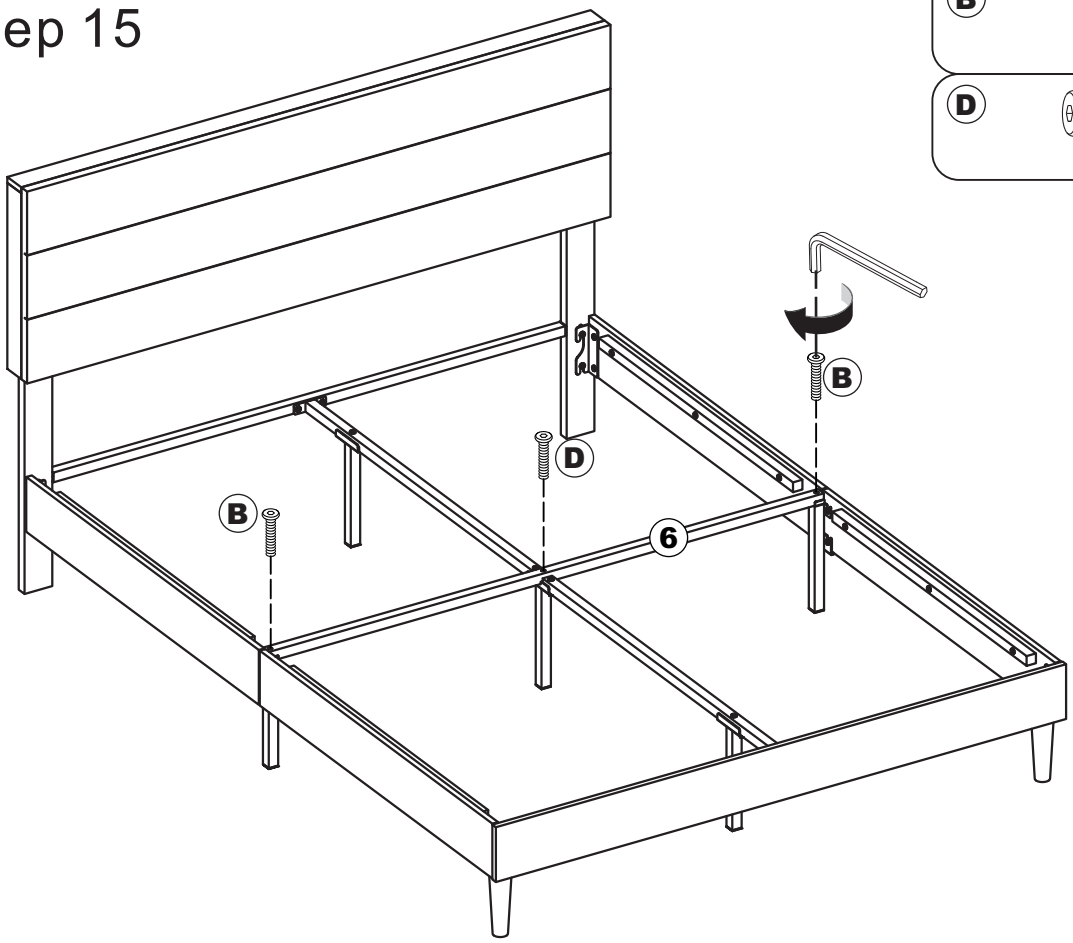

Step 16

