THE BED
ASSEMBLY INSTRUCTIONS

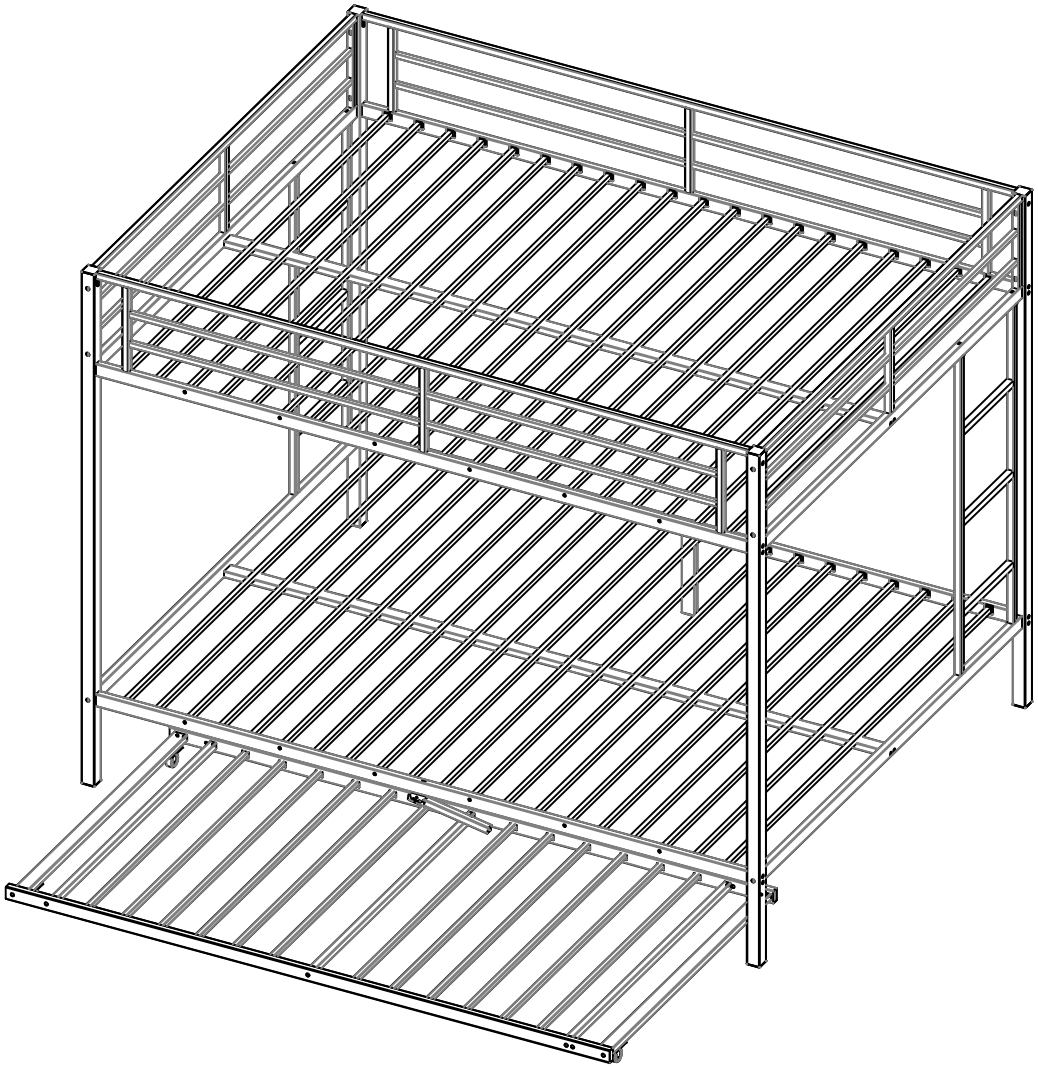

Attention *Please use the screws according to the instructions, thank you.*

SAFETY WARNINGS AND GENERAL NOTES:

1. Follow the information on the warnings on the bunk bed end structure and on the carton. Do not remove the warning label from the bed.
2. Always use the recommended size mattress on mattress support, or both, to help prevent the likelihood of entrapment or falls.
3. Do not allow children under 6 years of age to use the upper bunk.
4. Periodically check and ensure the guardrail, ladder and other components are in their proper position, free from damage, and all connectors are tight.
5. Do not allow horseplay on or under beds.
6. Always prohibit jumping on the bed.
7. Prohibit more than one person on upper bunk.
8. Always use the ladder for entering and leaving the upper bunk.
9. Do not use substitute parts. Contact the manufacturer or dealer for replacement parts.
10. Use of a night-light may provide added safety precaution for a child using the upper bunk.
11. Always use guardrails on both long sides of the upper bunk.
12. If the bunk bed is placed adjacent to a wall, the full-length guardrail must be positioned flush against the wall to prevent entrapment hazards. Waterbeds and inflatable mattresses are strictly prohibited.
13. STRANGULATION HAZARD-Never attach or hang items to any part of the bunk bed that are not designed for use with the bed; for example, but not limited to, hooks, belts and jump ropes.
14. Keep these instructions for future reference.
15. We recommend assembling your bunk bed on the shipping carton to protect your floor or carpet.
16. Be certain all staples are out of the box before beginning assembly on the shipping carton.
17. USE ONLY MATTRESSES WHICH ARE AS THE TABLE BELOW ON UPPER AND ON LOWER BUNKS.

Down bed

Mattress type	Length	Width	Thickness
Queen Standard	79”-80”	59" -60"	8”

Up bed (bunk bed and tri-bed included)

Mattress type	Length	Width	Thickness
Queen Standard	79”-80”	59" -60"	6”Max
Movable bed support	Length	Width	Thickness
Standard	72”-73”	37" -38"	4”Max

18. SURFACE OF MATTRESS MUST BE AT LEAST 5"(127MM) BELOW THE UPPER EDGE OF GUARDRAILS.
19. Replacement Parts:

Replacement Parts, including additional guardrails, may be obtained from any of our dealers.

Bed parts view

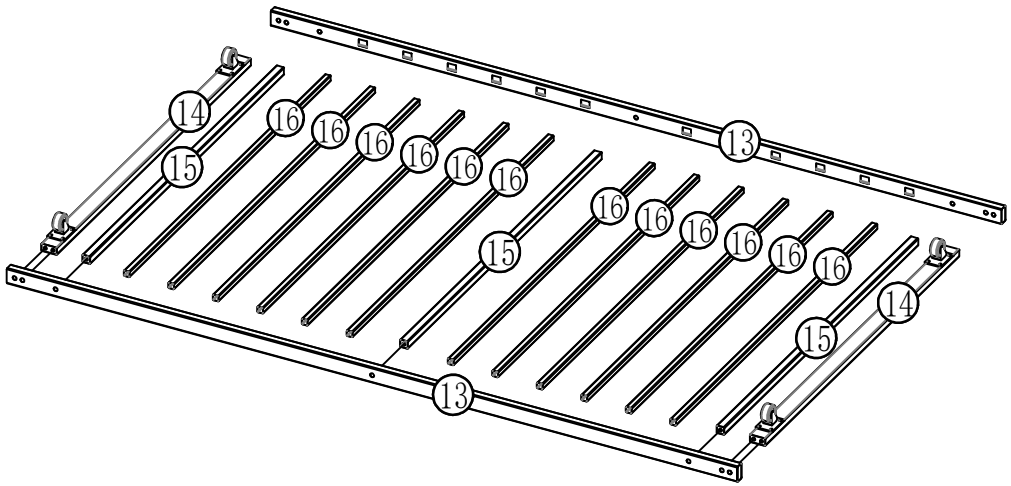

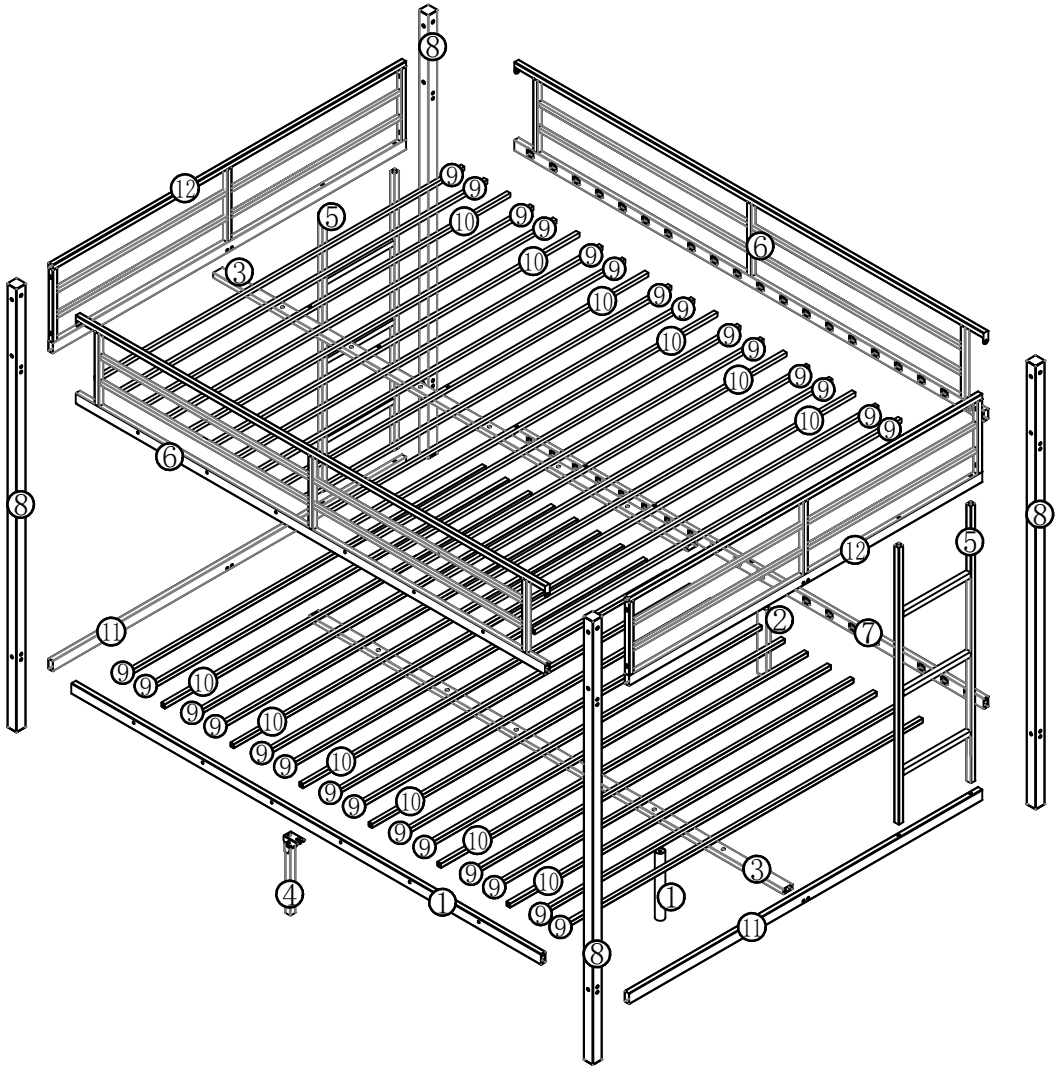

Part List

1-1pcs	2-1pcs	3-2pcs	4-1pcs
5-2pcs	6-2pcs	7-1pcs	8-4pcs
9-28pcs	10-12pcs	11-2pcs	12-2pcs
13-2pcs	14-2pcs	15-3pcs	16-12pcs

Hardware List

C 8*35 26PCS	D 8*55 37PCS	E 6*25 38PCS	F 8*15 12PCS	Y 6*10 16PCS	
K 104PCS	with brake 2 PCS	without brake 2 PCS	T-4PCS	U-2PCS	L

Step 1: Use hardware L、D and F to connect #5、#8、#11 and #12 together.

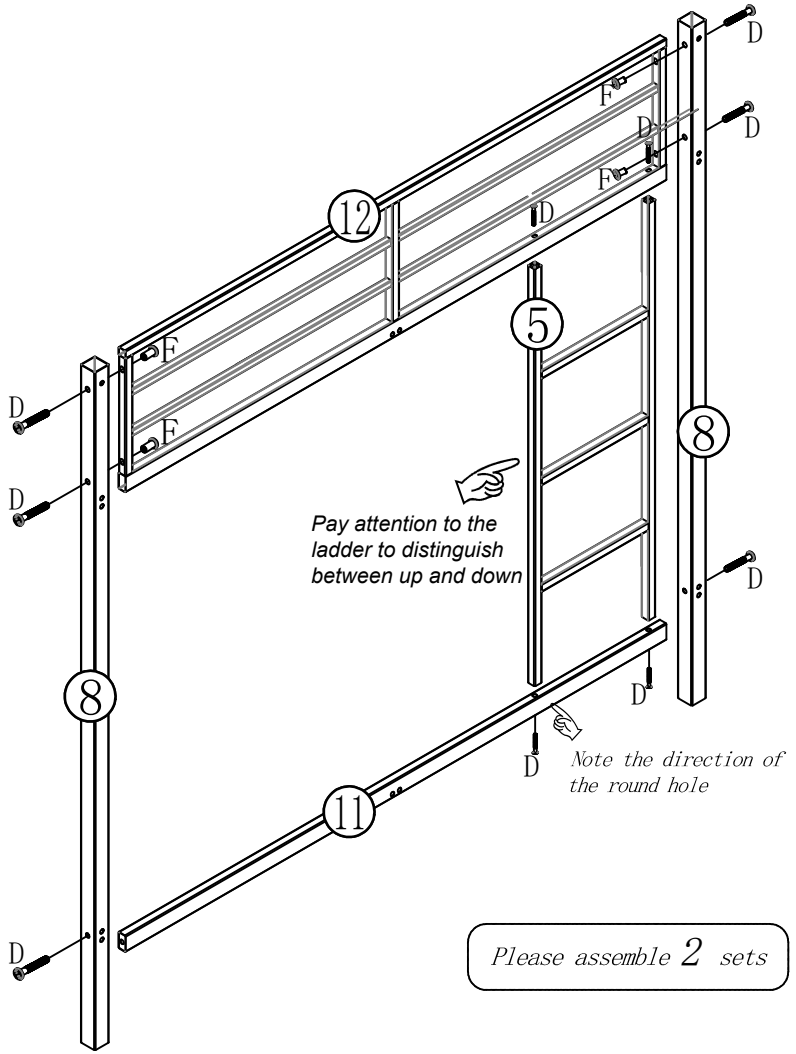

D 8*55-20PCS	F 8*15-8PCS	L

Step 2: Install part #K to parts #1 and #7 and Use hardware L, D and E to connect #1,#2,#4 and #7 together.

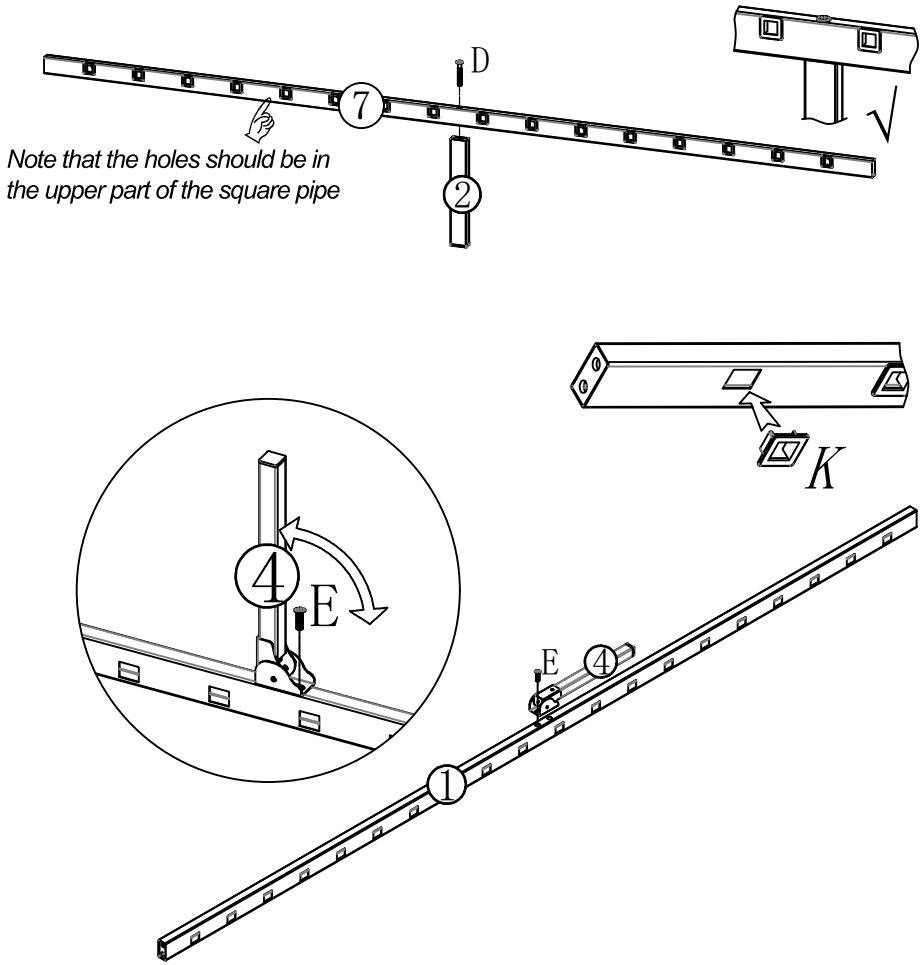

Step 3: nstall part #K to parts #6， Then use hardware L, C, D,F to connect #3,#6,#7and #2 to the previously installed components.

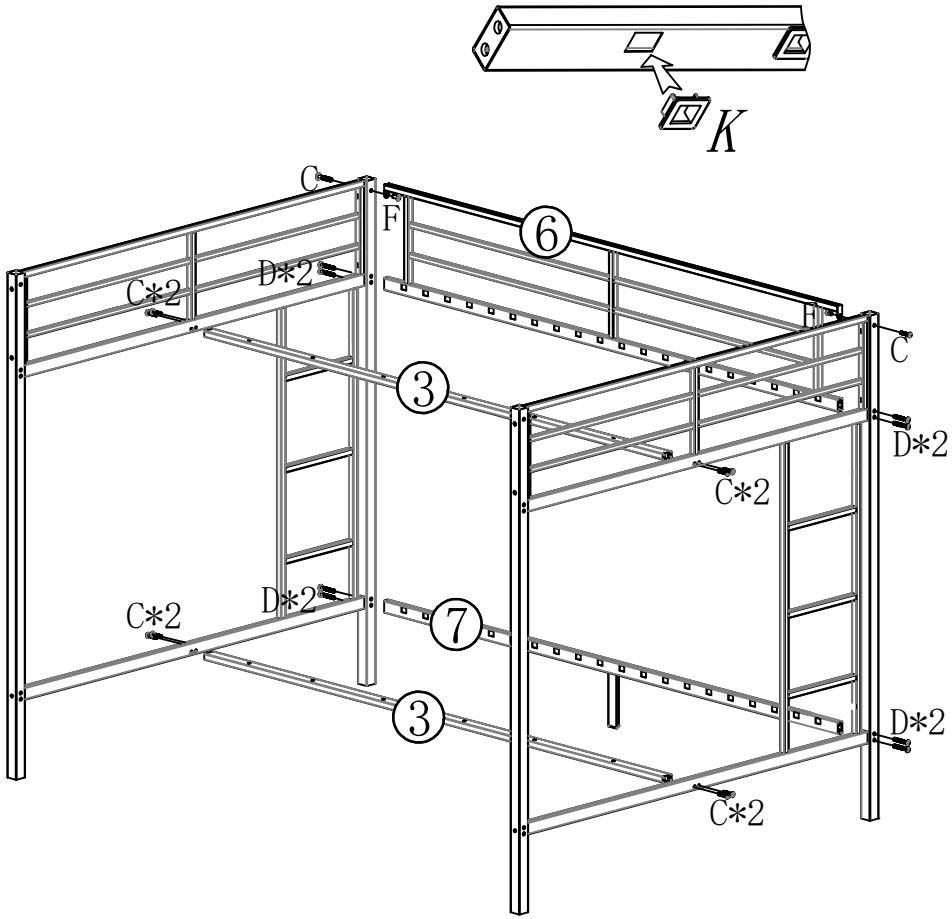

D 8*55-1PCS	E 6*25-2PCS	K-40PCS	L	C 8*35-10PCS	D 8*55-8PCS	F 8*15-2PCS	K-20PCS	L

Step 4: Use hardware L, E to connect #1 to the previously installed components.

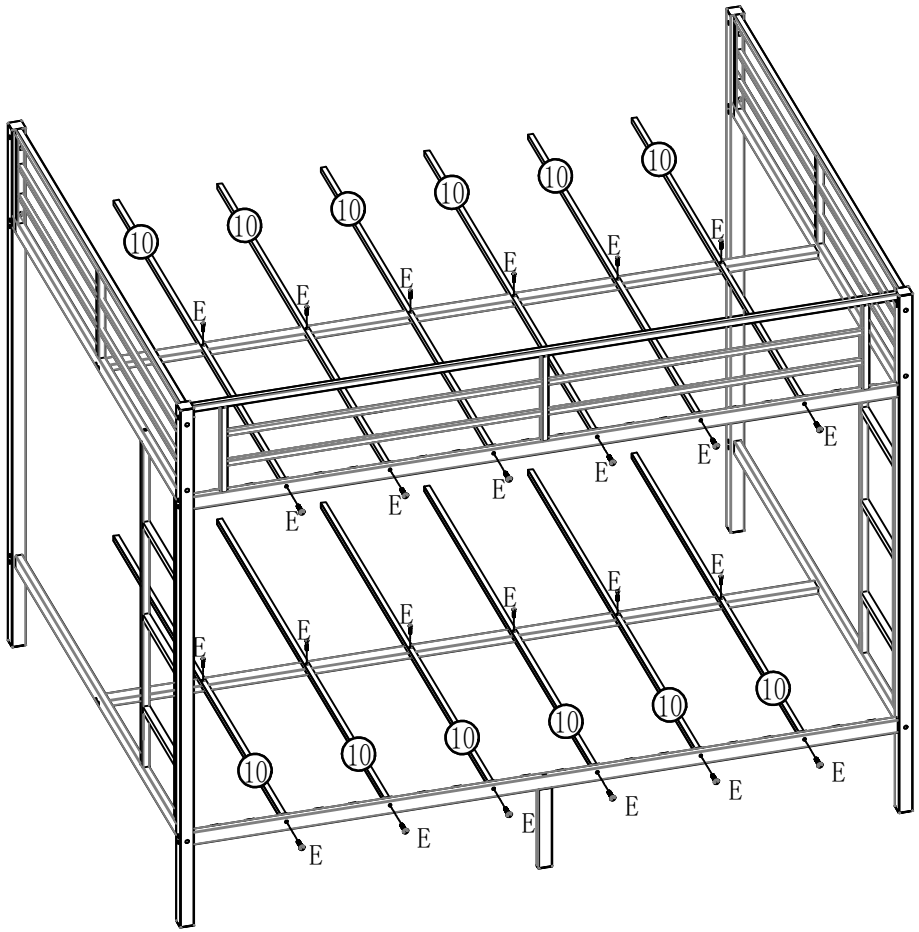

Step 5: Use connect #9 to the previously installed components.

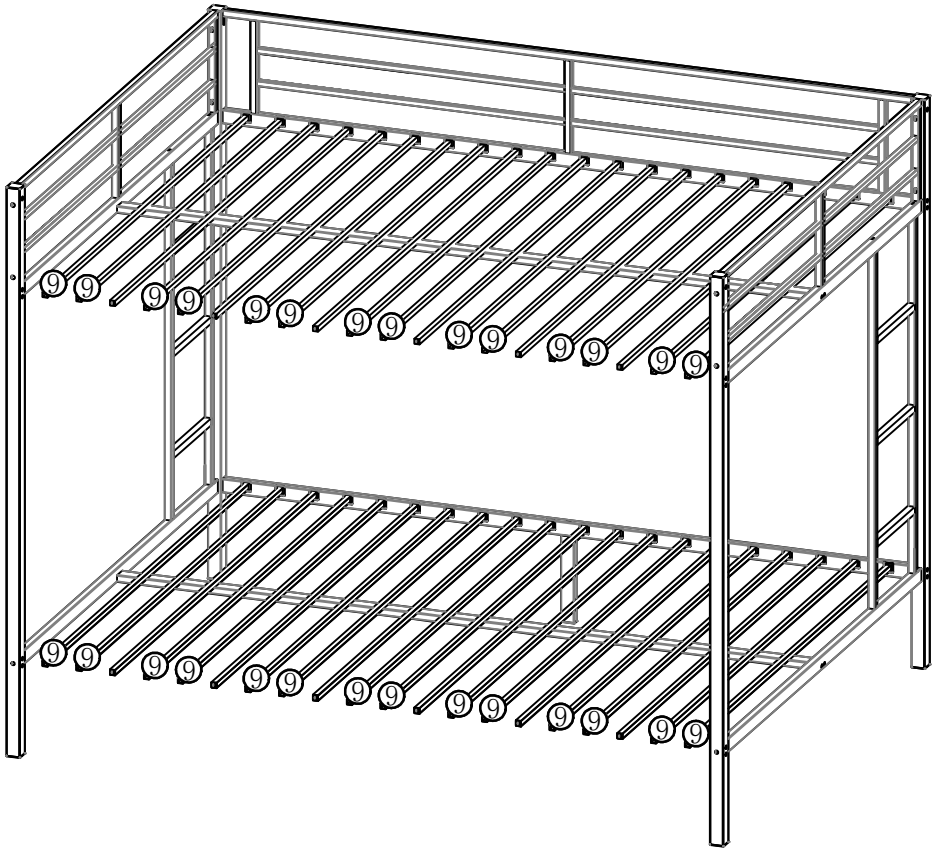

E
6*25-24PCS

L

9-28pcs

Step 6: Install part #K to parts #6，Then use hardware L, C,D, E,F to connect #6 and #7 to the previously installed components.

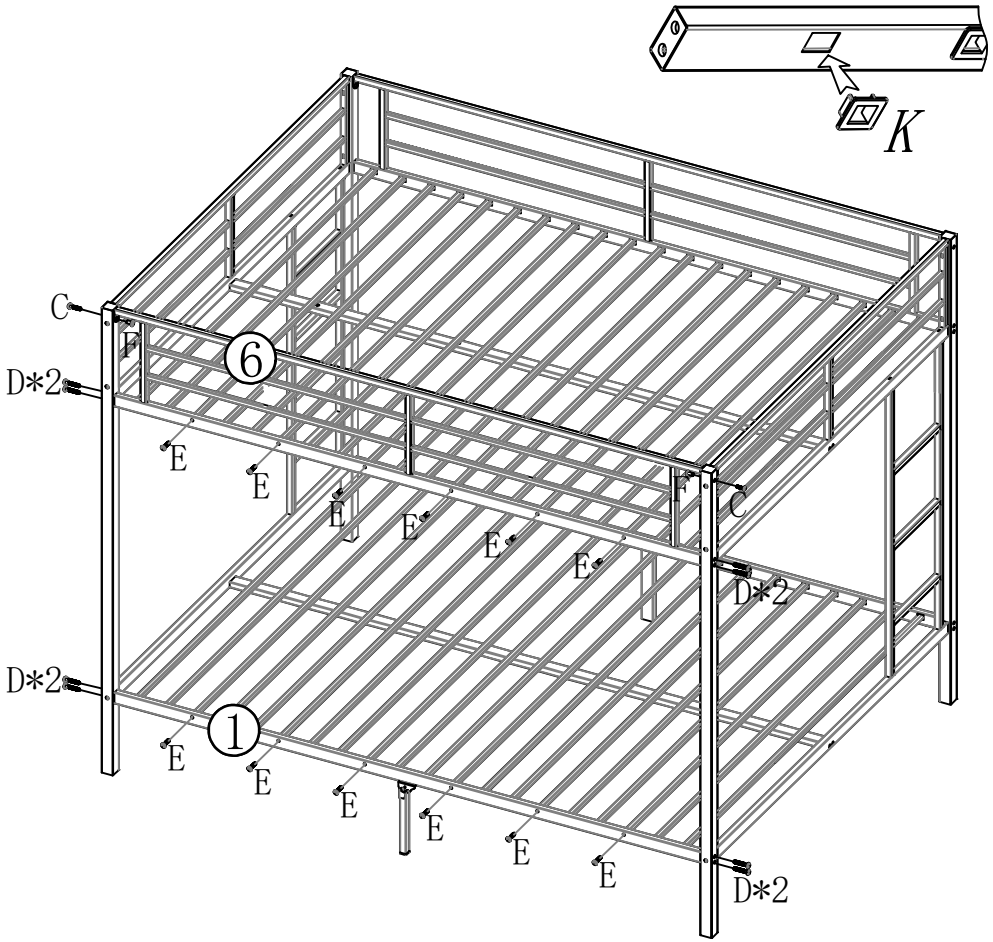

Step 7: Install part #K to parts #13，Then use hardware L, C,Y,X and Z to connect#13, #14,#15 and #16 together.

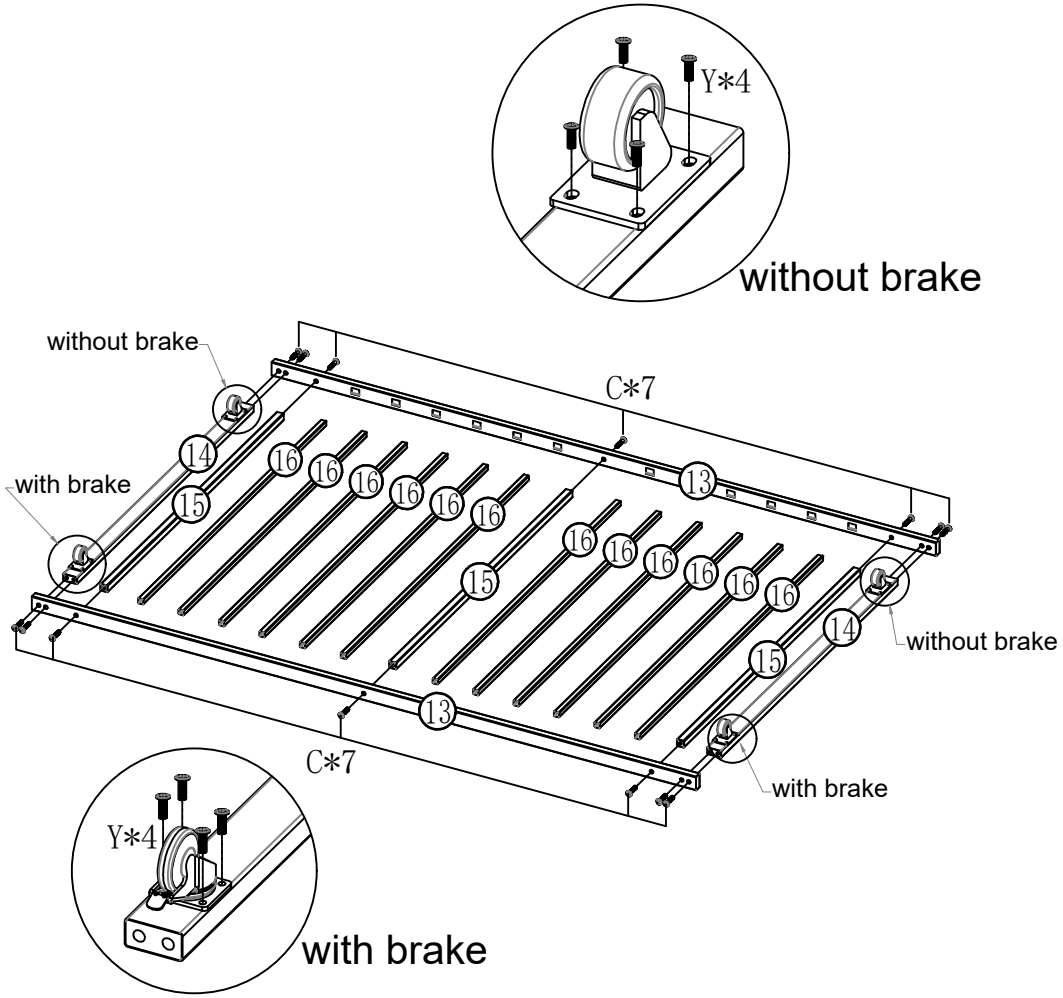

C 8*35-2PCS	D 8*55-8PCS	E 6*25-12PCS	F 8*15-2PCS	K--20PCS	L	C 8*35-14PCS	Y 6*10-16PCS	K--24PCS	with brake 2 PCS	without brake 2 PCS	L

Completed

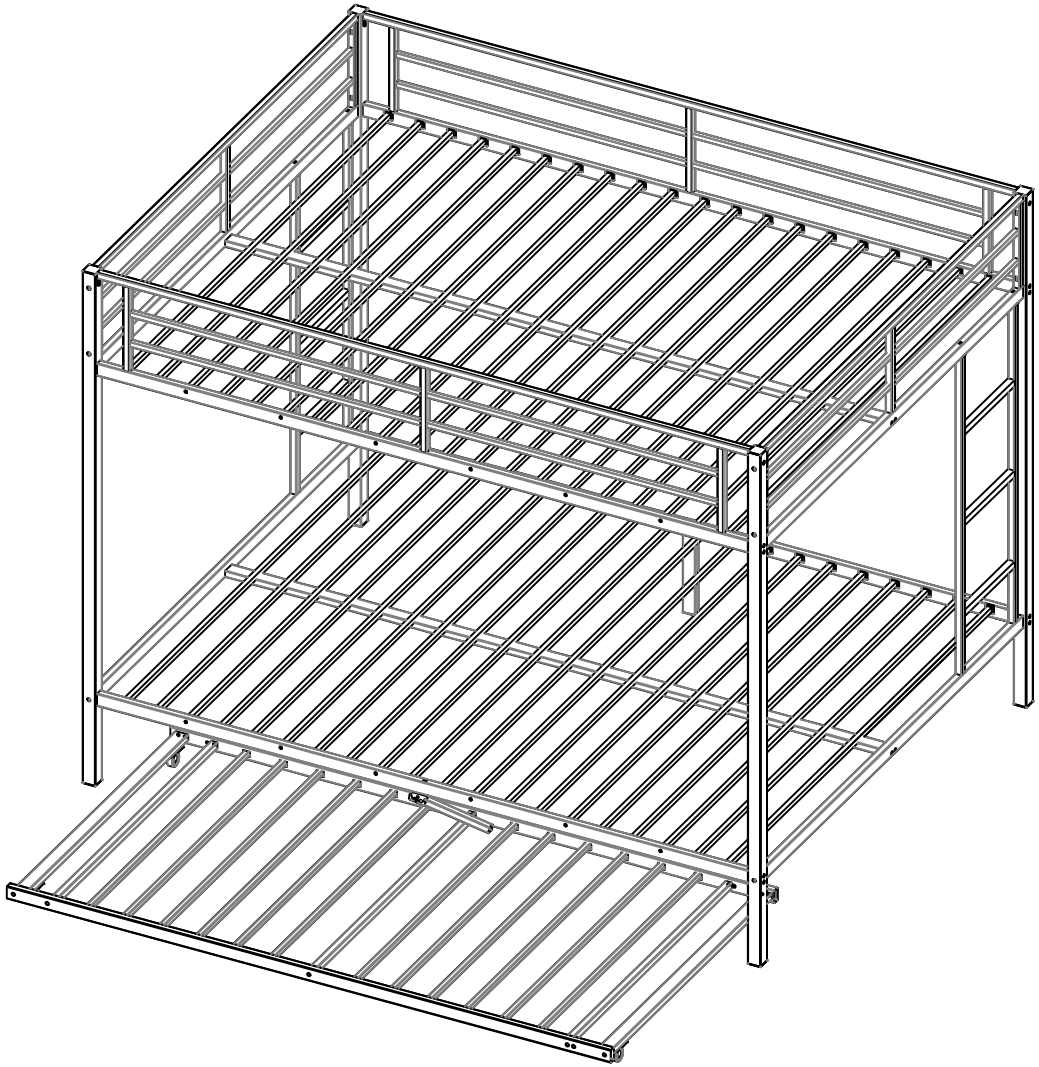

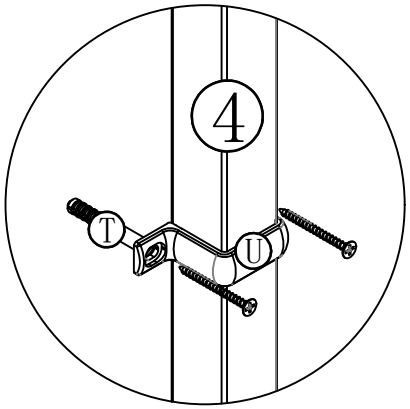

Tips:
If you feel that the bed is a little wobbly then please use the parts "U" and "T"for reinforcement

Attention *Please tighten all screws before use, thank you.*